Resource - /resource/org.pnml.tools.epnk.tutorials.app.technical.examples/technical-02.pnml/#pg1 - Eclipse Platform

File Edit Diagram Navigate Search Project Diagram Services Samples Run Window Help

Project Explorer

- org.pnml.tools.epnk.tutorials.app.tec
  - technical-01.pnml
  - technical-02.pnml

technical-02.pnml | Page: pg1

Application: Technical Simulator (Tutorial)

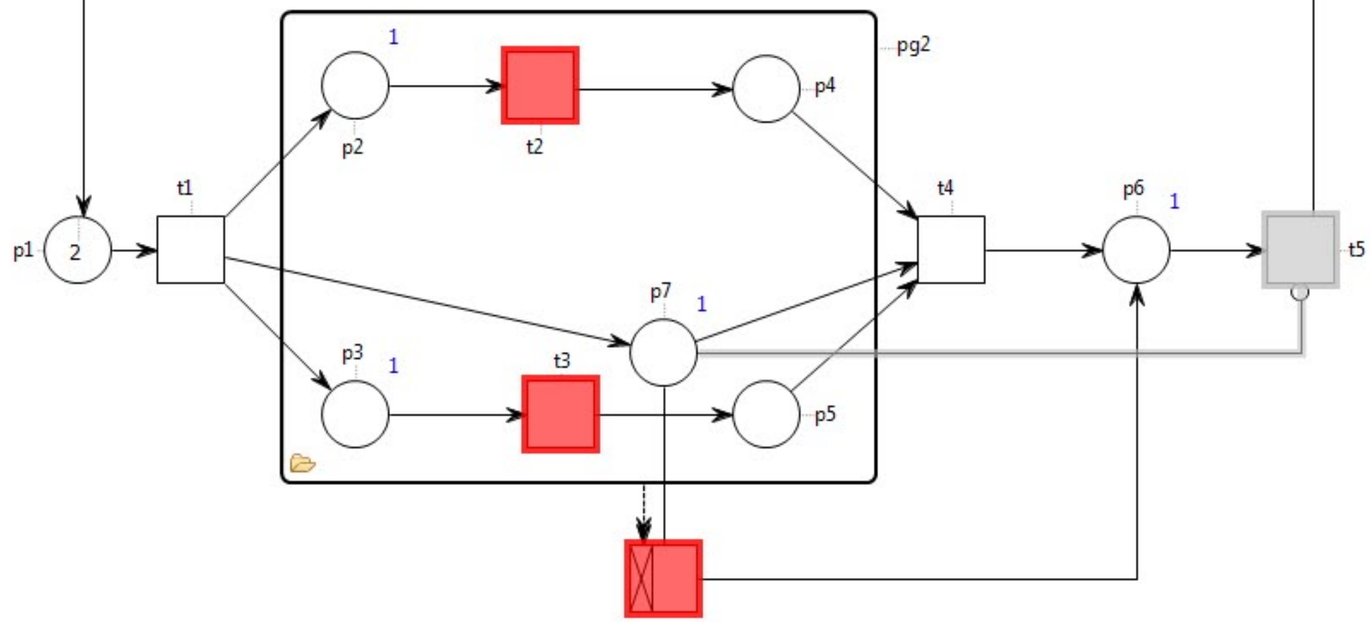

Page: pg2

Tutorial)

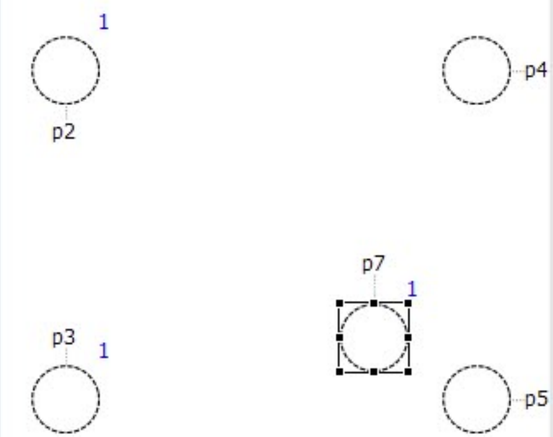

Outline

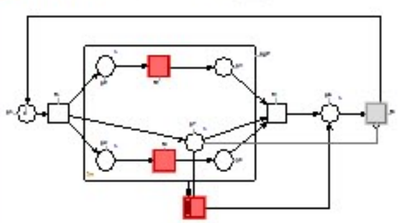

Problems | Properties | ePNK: Applications

Runtime name	Application name	Net	Info
Technical ...	TechnicalSimulator	First technical example	idle