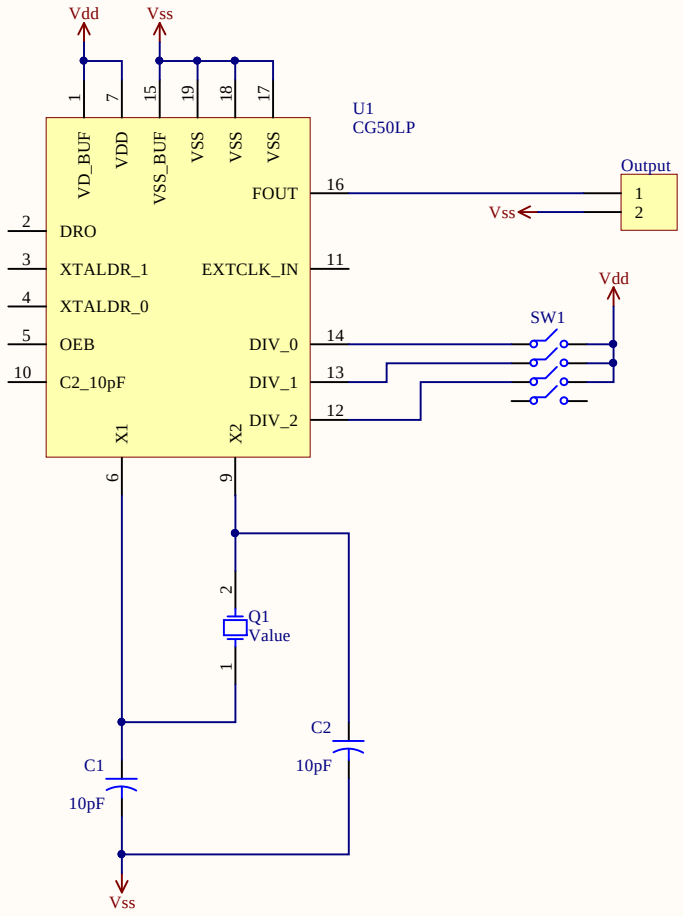

Frequency divider

Eight division factors (1, 2, 4, 8, 16, 32, 256 and 512) can be selected through the digital control lines DIV_0, DIV_1 and DIV_2.

DIV_0	DIV_1	DIV_2	Division rate
0	0	0	1
1	0	0	2
0	1	0	4
1	1	0	8
0	0	1	16
1	0	1	32
0	1	1	256
1	1	1	512

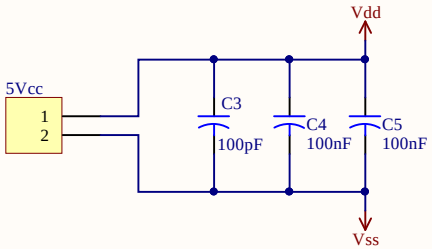

Title	DVT Clock Generator		
Part Number PN00054	Revision 1	Sheet 1 of 1	TDE Equipment and Manufacturing
Date 01.12.2016		Drawn By Sebastian Kulik	
File DVT-ClockGenerator.SchDoc			

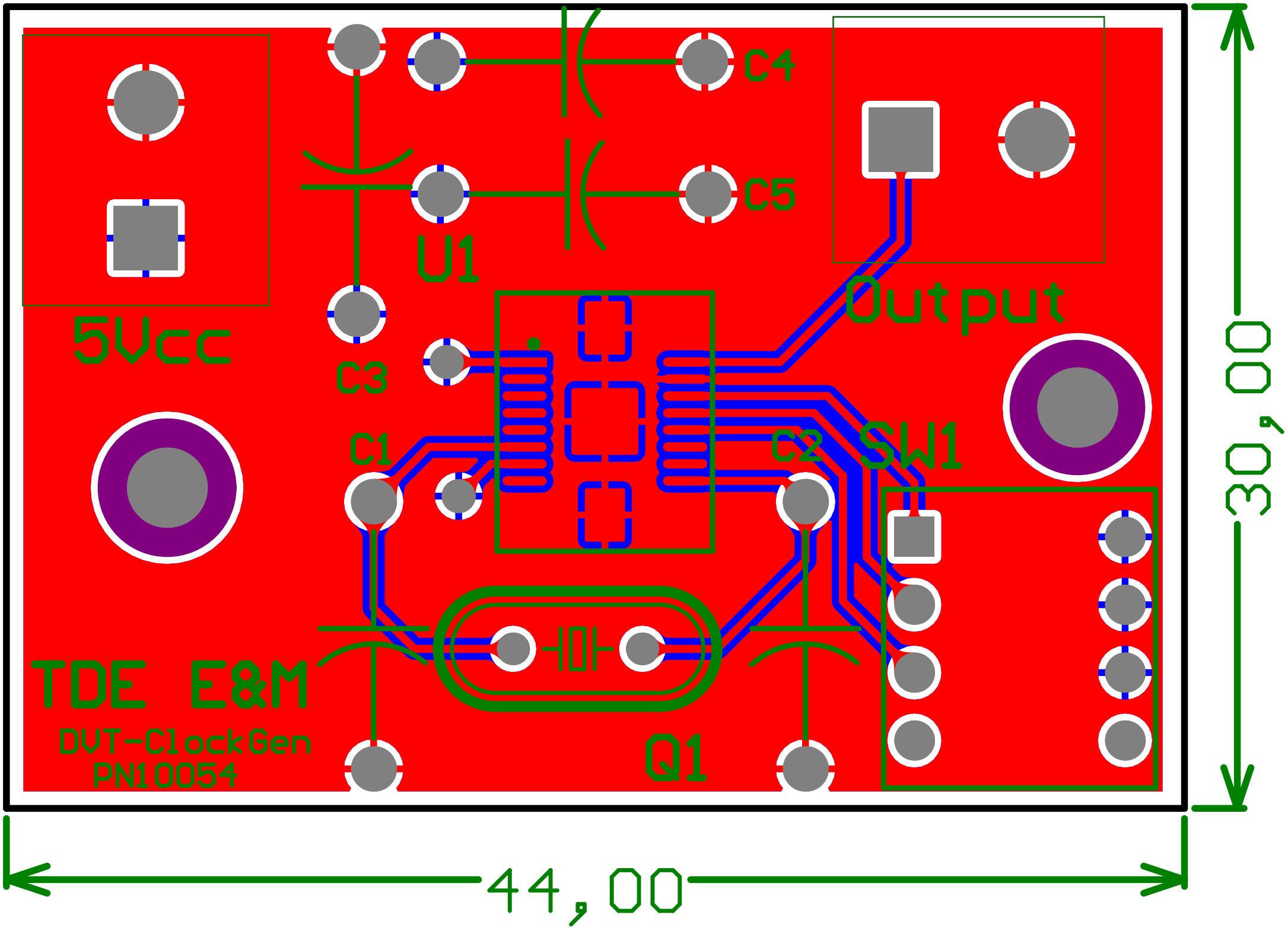
C4
C5
U1
5Vcc
C3
C1
C2
SW1
Output
TDE E&M
DUT-ClockGen
PN10054
Q1
30,00
44,00