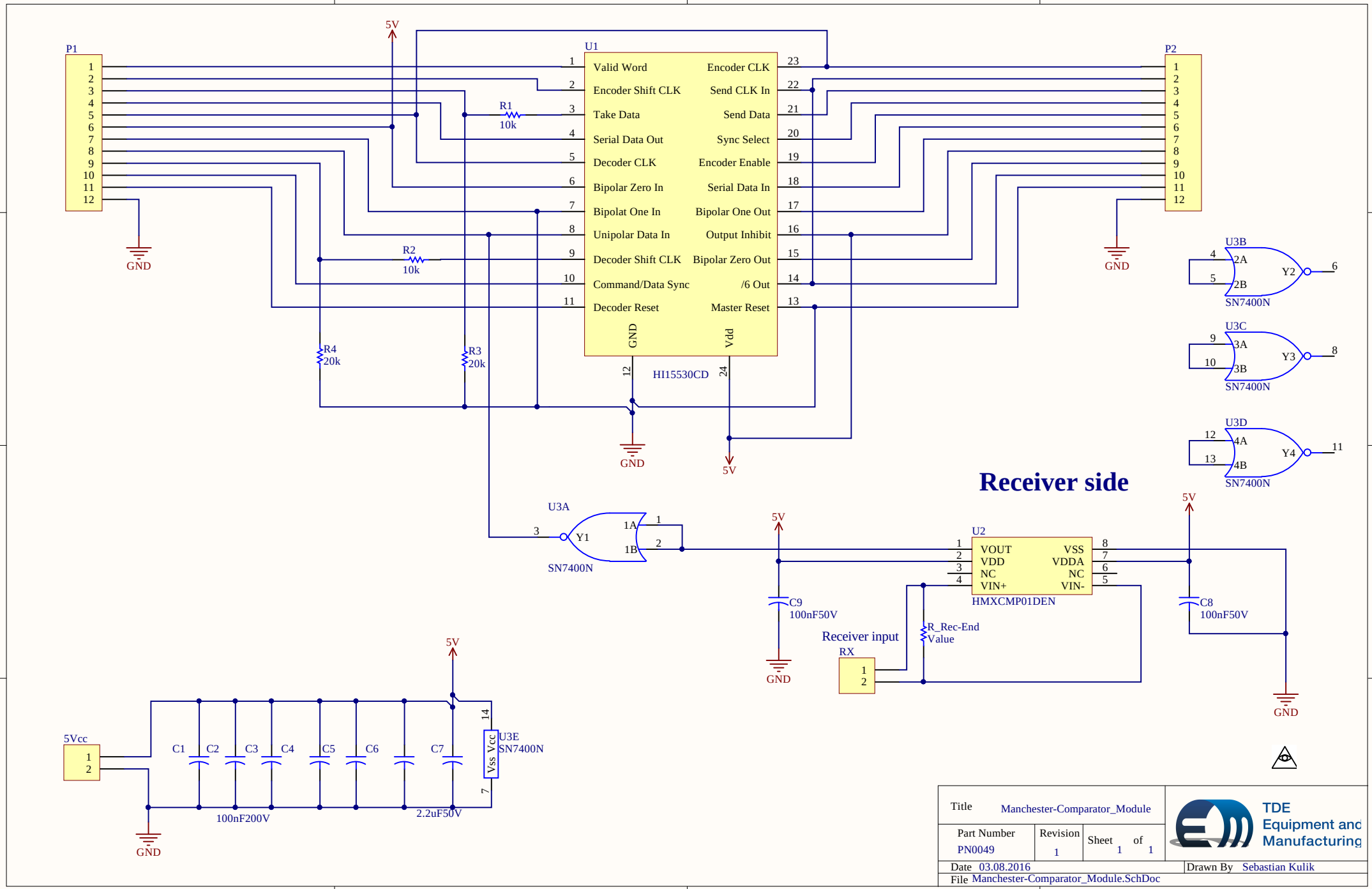
P1
P2
U1
HI15530CD
Valid Word
Encoder Shift CLK
Take Data
Serial Data Out
Decoder CLK
Bipolar Zero In
Bipolat One In
Unipolar Data In
Decoder Shift CLK
Command/Data Sync
Decoder Reset
Encoder CLK
Send CLK In
Send Data
Sync Select
Encoder Enable
Serial Data In
Bipolar One Out
Output Inhibit
Bipolar Zero Out
/6 Out
Master Reset
GND
Vdd
R1 10k
R2 10k
R3 20k
R4 20k
5V
GND
U3A
U3B
U3C
U3D
U3E
SN7400N
Receiver side
U2
HMXCMP01DEN
VOUT
VDD
NC
VIN+
VSS
VDDA
NC
VIN-
C8 100nF50V
C9 100nF50V
Receiver input
RX
R_Rec-End Value
5Vcc
C1
C2
C3
C4
C5
C6
C7
100nF200V
2.2uF50V
Title
Manchester-Comparator_Module
Part Number
PN0049
Revision
1
Sheet 1 of 1
Date 03.08.2016
Drawn By Sebastian Kulik
File Manchester-Comparator_Module.SchDoc
TDE Equipment and Manufacturing

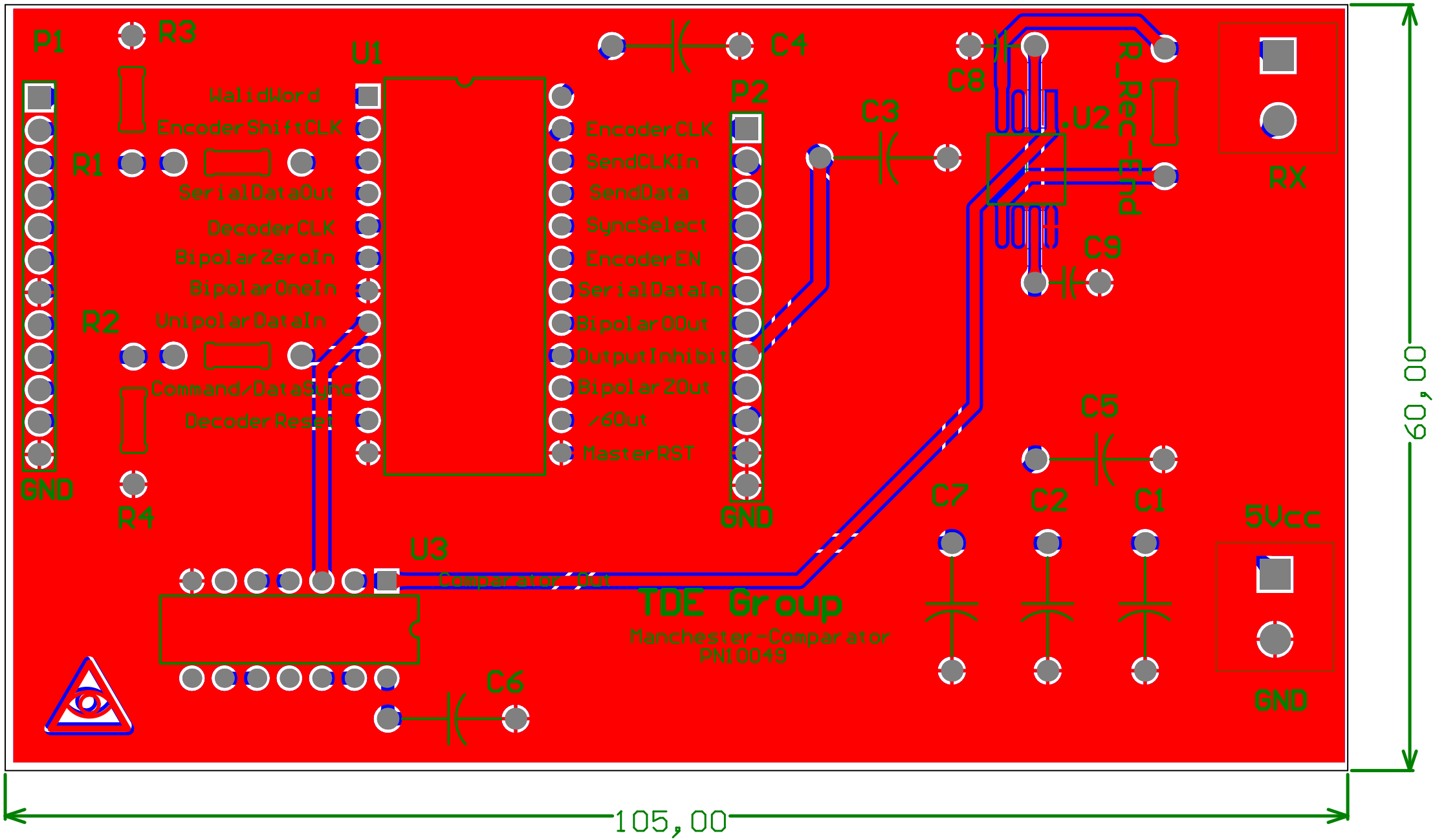
P1
R3
U1
C4
C8
P2
C3
U2
Rec-End
RX
WalidWord
EncoderShiftCLK
R1
SerialDataOut
DecoderCLK
BipolarZeroIn
BipolarOneIn
R2
UnipolarDataIn
Command/DataSync
DecoderReset
GND
R4
EncoderCLK
SendCLKIn
SendData
SyncSelect
EncoderEN
SerialDataIn
BipolarOOut
OutputInhibit
BipolarZOut
/6Out
MasterRST
GND
C9
C5
C7
C2
C1
5Vcc
U3
Comparator Out
TDE Group
Manchester-Comparator
PN10049
C6
GND
60,00
105,00