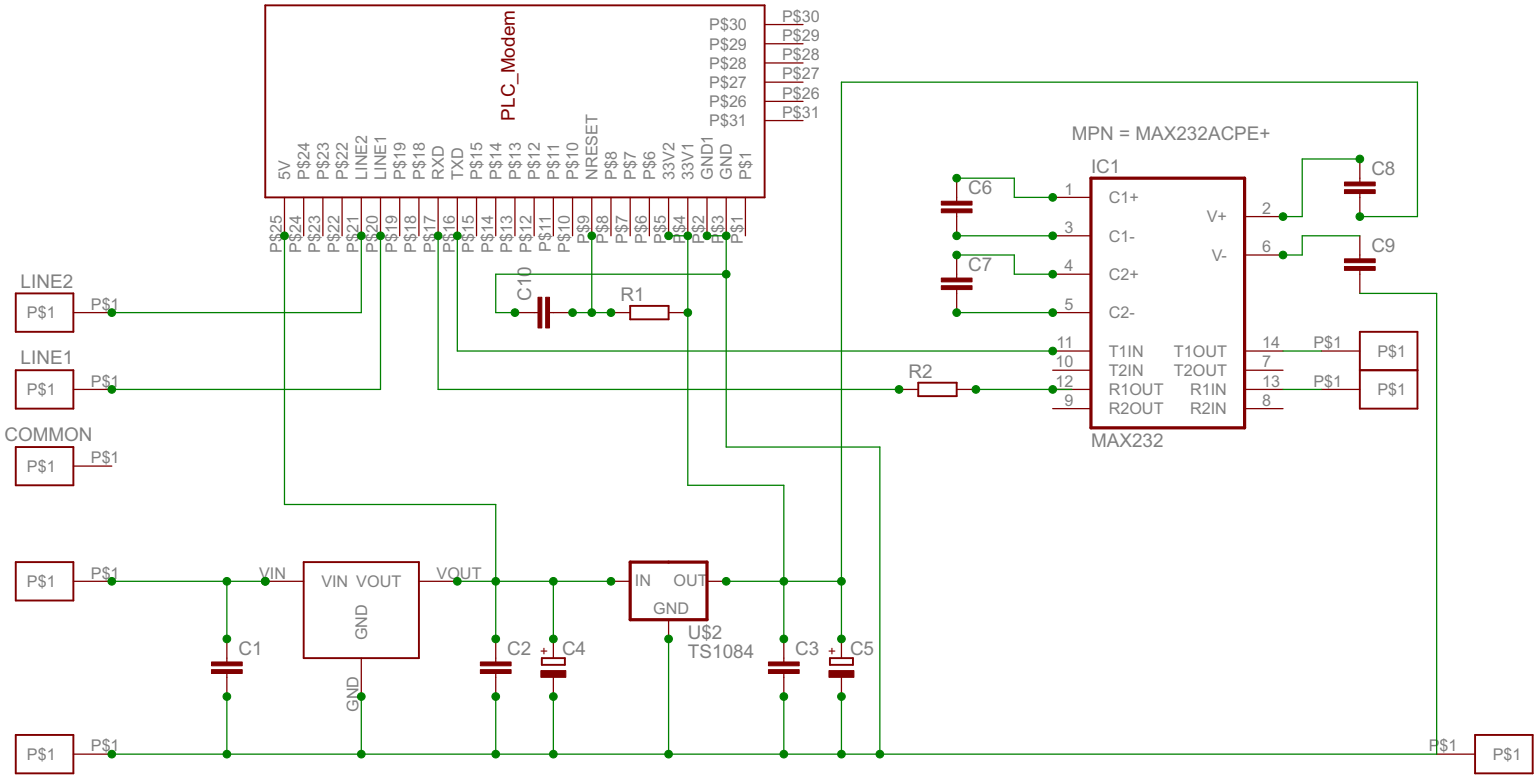

TITLE: Modemplatine_modem_1_1

Document Number:

REV:

Date: 20.09.2011 16:11:18

Sheet: 1/1