CAMtasticDXP (TM):

it is part of

Silk screen top

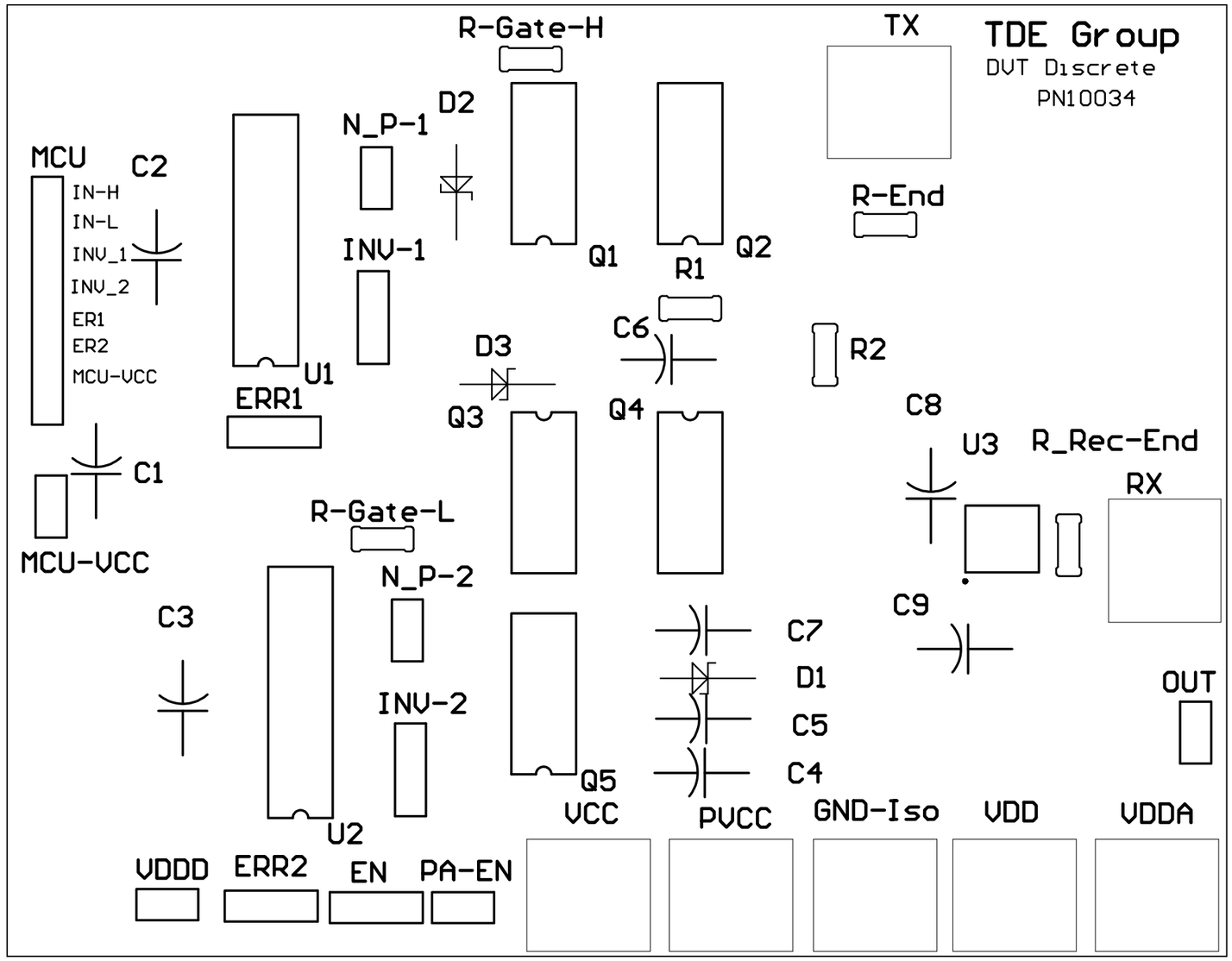

For this drawing we reserve ourselves all rights
Pay attention to protection note according to DIN ISO 16016
Changes from the supplier need the previous approval by TDE

Handwritten remarks are not allowed

Gerber: DVT-Discrete.GTO

toleranced Din.	tolerance	change index	number	modification	16.12.2015	S.Kulik	S.Kulik		
					Date	editor	certifi-cated	Appr.	Index

thread according to DIN — RoHs/HAL
surface:
german projection
material:
scale:
material type:
substitution for
dimensions w/o tolerance:

DVT Discrete

project version
TDE
PN10034
semi finished product
material consumption:
weight:
number of pieces per package:
format: DIN A 3
Classing:
Supporting regulations which apply

mailing: V: ZV: