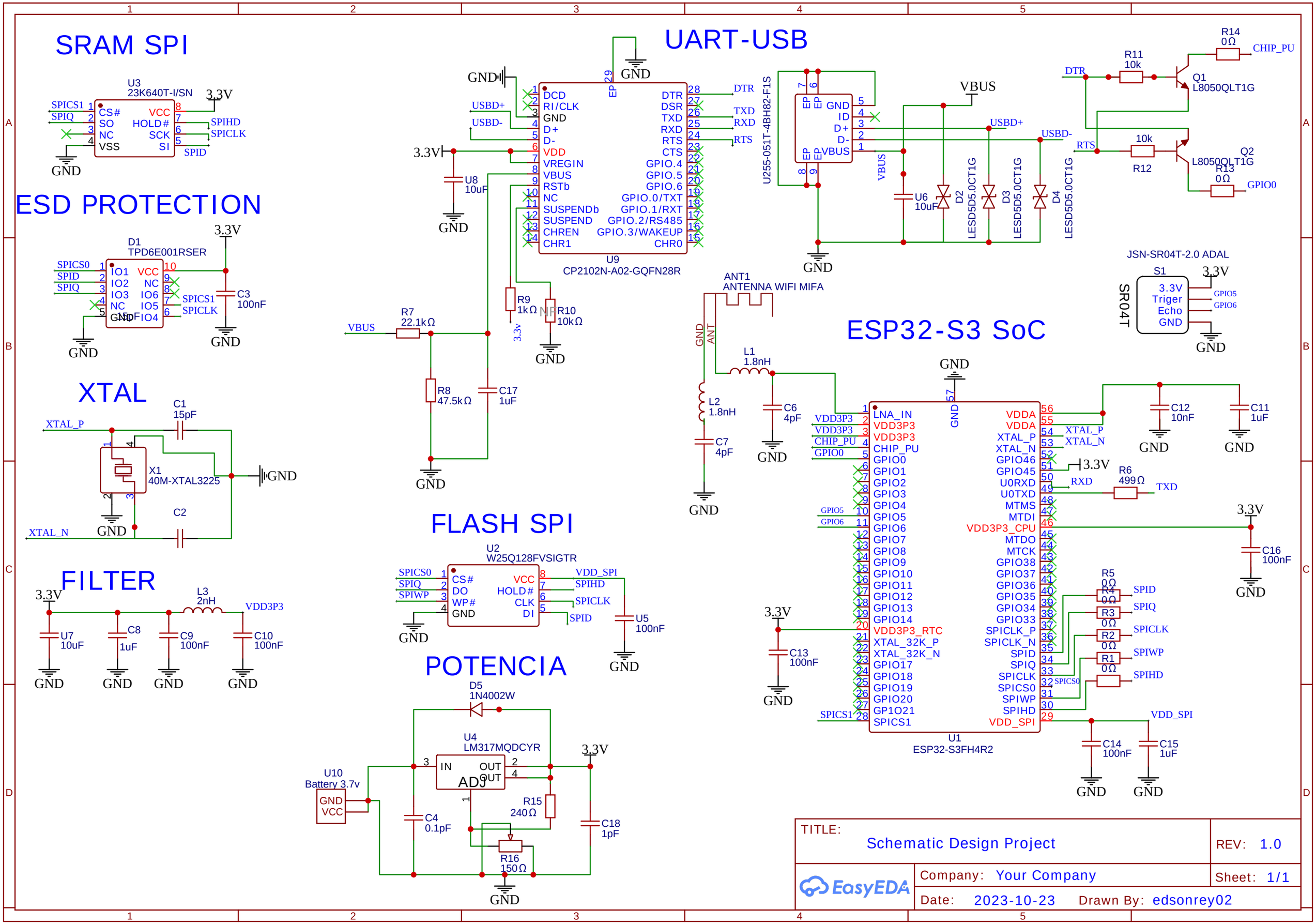
SRAM SPI
U3
23K640T-I/SN
3.3V
SPICS1
SPIQ
CS#
SO
NC
VSS
VCC
HOLD#
SCK
SI
SPIHD
SPICLK
SPID
GND
ESD PROTECTION
D1
TPD6E001RSER
3.3V
SPICS0
SPID
SPIQ
IO1
IO2
IO3
NC
GND
VCC
NC
IO6
IO5
IO4
SPICS1
SPICLK
C3
100nF
GND
XTAL
C1
15pF
XTAL_P
X1
40M-XTAL3225
GND
C2
XTAL_N
FILTER
3.3V
L3
2nH
VDD3P3
U7
10uF
C8
1uF
C9
100nF
C10
100nF
GND
UART-USB
GND
USBD+
USBD-
3.3V
U8
10uF
DCD
RI/CLK
GND
D+
D-
VDD
VREGIN
VBUS
RSTb
NC
SUSPENDb
SUSPEND
CHREN
CHR1
DTR
DSR
TXD
RXD
RTS
CTS
GPIO.4
GPIO.5
GPIO.6
GPIO.0/TXT
GPIO.1/RXT
GPIO.2/RS485
GPIO.3/WAKEUP
CHR0
U9
CP2102N-A02-GQFN28R
R9
1kΩ
R10
10kΩ
VBUS
R7
22.1kΩ
R8
47.5kΩ
C17
1uF
FLASH SPI
U2
W25Q128FVSIGTR
SPICS0
SPIQ
SPIWP
CS#
DO
WP#
GND
VCC
HOLD#
CLK
DI
VDD_SPI
SPIHD
SPICLK
SPID
U5
100nF
POTENCIA
D5
1N4002W
U4
LM317MQDCYR
IN
OUT
ADJ
3.3V
U10
Battery 3.7v
GND
VCC
C4
0.1pF
R15
240Ω
R16
150Ω
C18
1pF
U255-051T-4BH82-F1S
GND
ID
D+
D-
VBUS
VBUS
U6
10uF
D2
LESD5D5.0CT1G
D3
LESD5D5.0CT1G
D4
LESD5D5.0CT1G
DTR
R11
10k
R14
0Ω
CHIP_PU
Q1
L8050QLT1G
RTS
10k
R12
Q2
L8050QLT1G
R13
0Ω
GPIO0
JSN-SR04T-2.0 ADAL
S1
SR04T
3.3V
Triger
Echo
GND
GPIO5
GPIO6
ANT1
ANTENNA WIFI MIFA
ESP32-S3 SoC
L1
1.8nH
L2
1.8nH
C6
4pF
C7
4pF
VDD3P3
CHIP_PU
GPIO0
LNA_IN
VDD3P3
VDD3P3
CHIP_PU
GPIO0
GPIO1
GPIO2
GPIO3
GPIO4
GPIO5
GPIO6
GPIO7
GPIO8
GPIO9
GPIO10
GPIO11
GPIO12
GPIO13
GPIO14
VDD3P3_RTC
XTAL_32K_P
XTAL_32K_N
GPIO17
GPIO18
GPIO19
GPIO20
GP1O21
SPICS1
VDDA
VDDA
XTAL_P
XTAL_N
GPIO46
GPIO45
U0RXD
U0TXD
MTMS
MTDI
VDD3P3_CPU
MTDO
MTCK
GPIO38
GPIO37
GPIO36
GPIO35
GPIO34
GPIO33
SPICLK_P
SPICLK_N
SPID
SPIQ
SPICLK
SPICS0
SPIWP
SPIHD
VDD_SPI
U1
ESP32-S3FH4R2
C12
10nF
C11
1uF
R6
499Ω
TXD
RXD
3.3V
C16
100nF
R5
0Ω
R4
0Ω
R3
0Ω
R2
0Ω
R1
0Ω
SPID
SPIQ
SPICLK
SPIWP
SPIHD
C13
100nF
C14
100nF
C15
1uF
TITLE:
Schematic Design Project
REV: 1.0
Company: Your Company
Sheet: 1/1
Date: 2023-10-23
Drawn By: edsonrey02
EasyEDA