Introduction to Smart Sensing

- Definition
- Examples of commercial sensors
- State of the art in smart sensing

Smart sensing layers

1 - Physical sensing principle

2 - Analog signal processing

3 - Analog-to-digital conversion

4 - Low-level digital signal processing

5 - High level digital signal processing

6 - Communication interfaces

7 - User interface

8 - Power supply

9 - Housekeeping

Organisation of course content

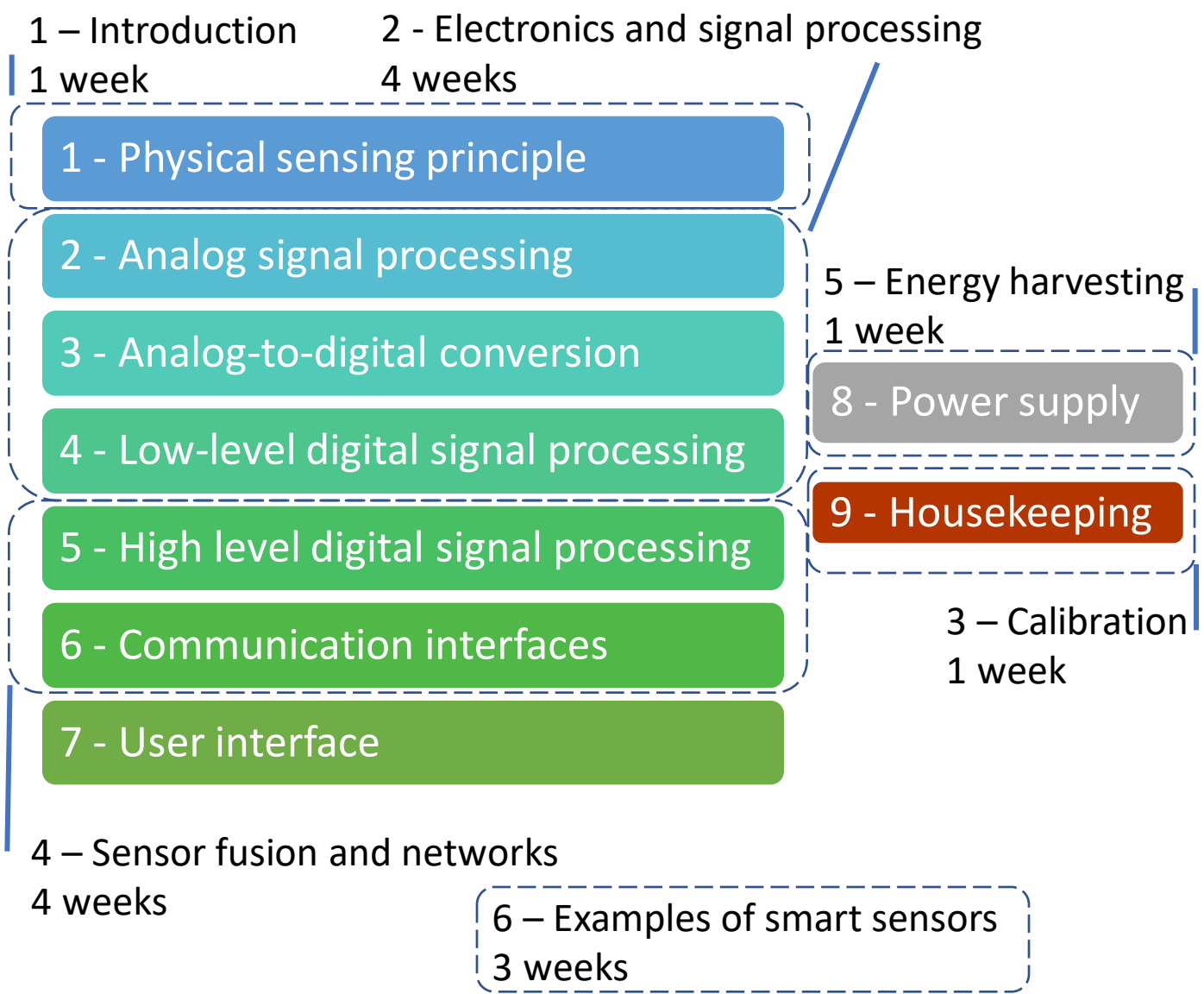

Definition of a smart sensor

A smart sensor comprises the sensing head (measurement of one or more physical quantities) with associated electronic circuits and analog-to-digital conversion, high level signal processing and networking interfaces in a compact unit.

The term of smart sensing is also applied to multi-sensor networks with data processing generating complex measurement information.

Example 1 : Step counting

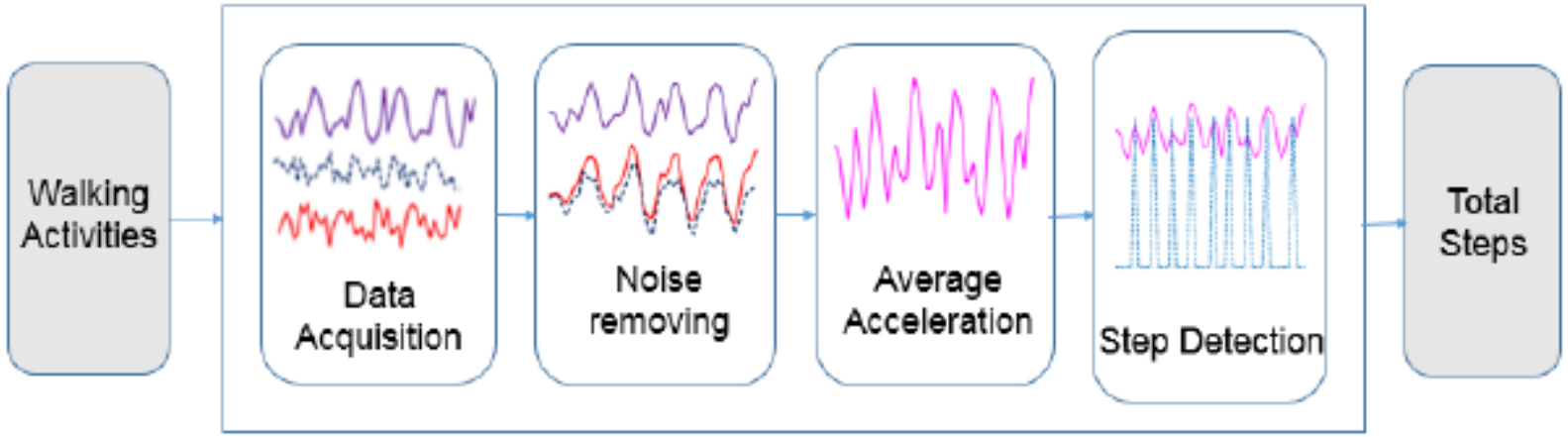

Example 2 : Fingerprint sensing

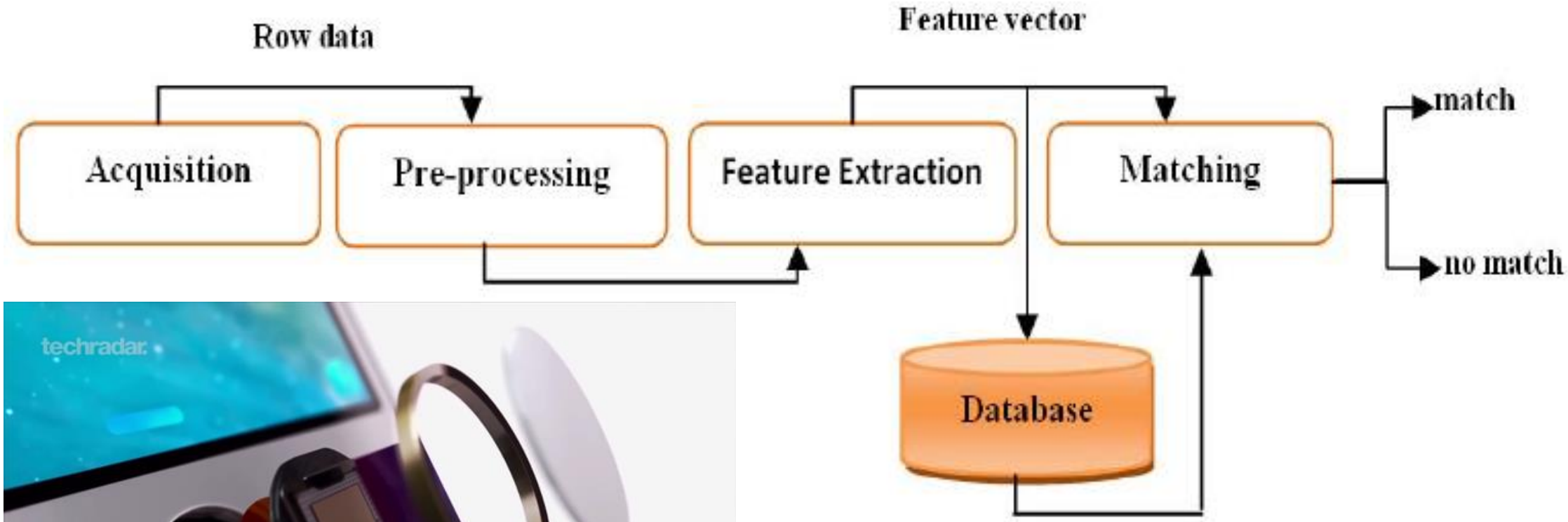

Example 3 : Electric drive condition monitoring

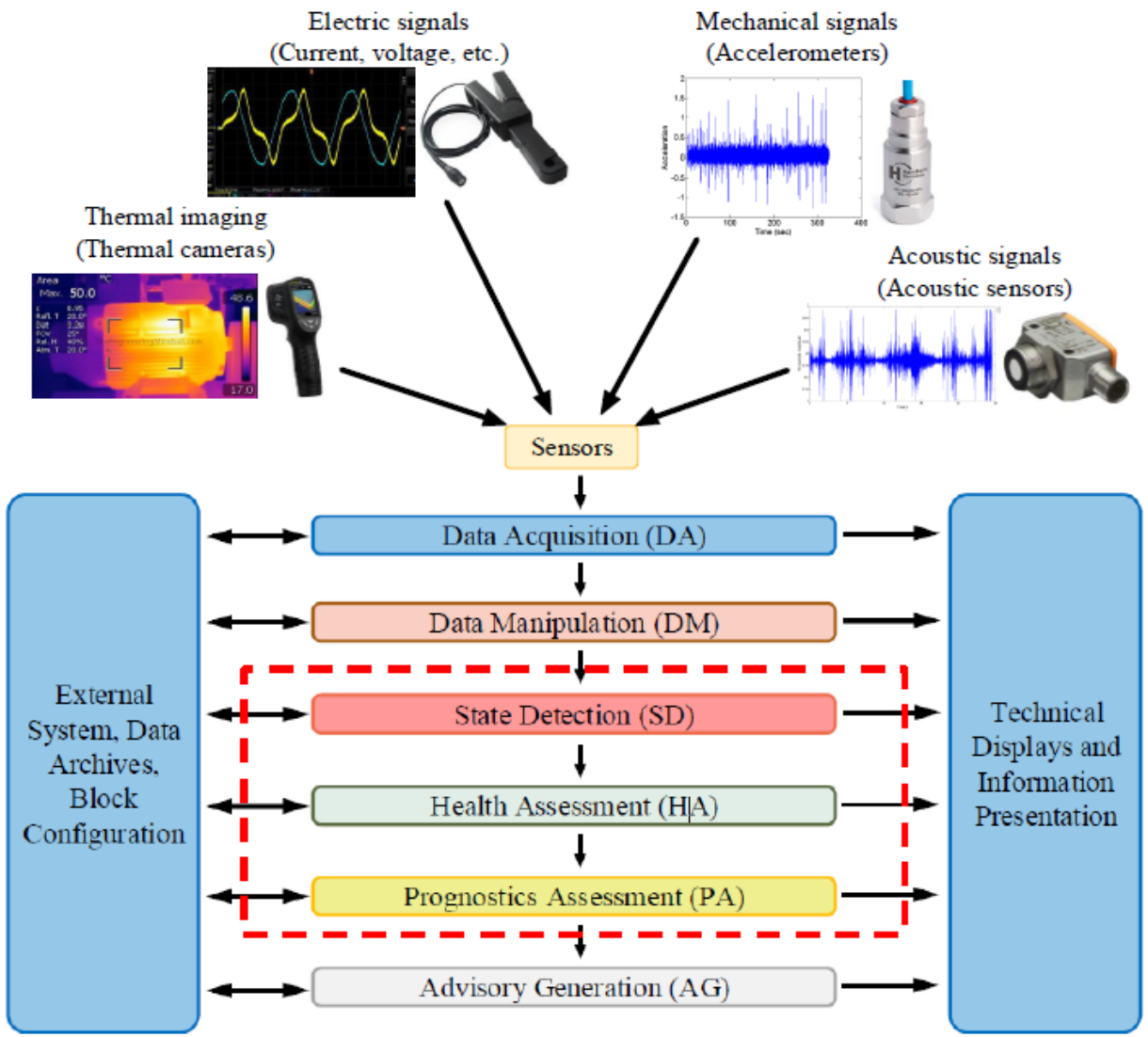

Example 4 : Automatic plant irrigation

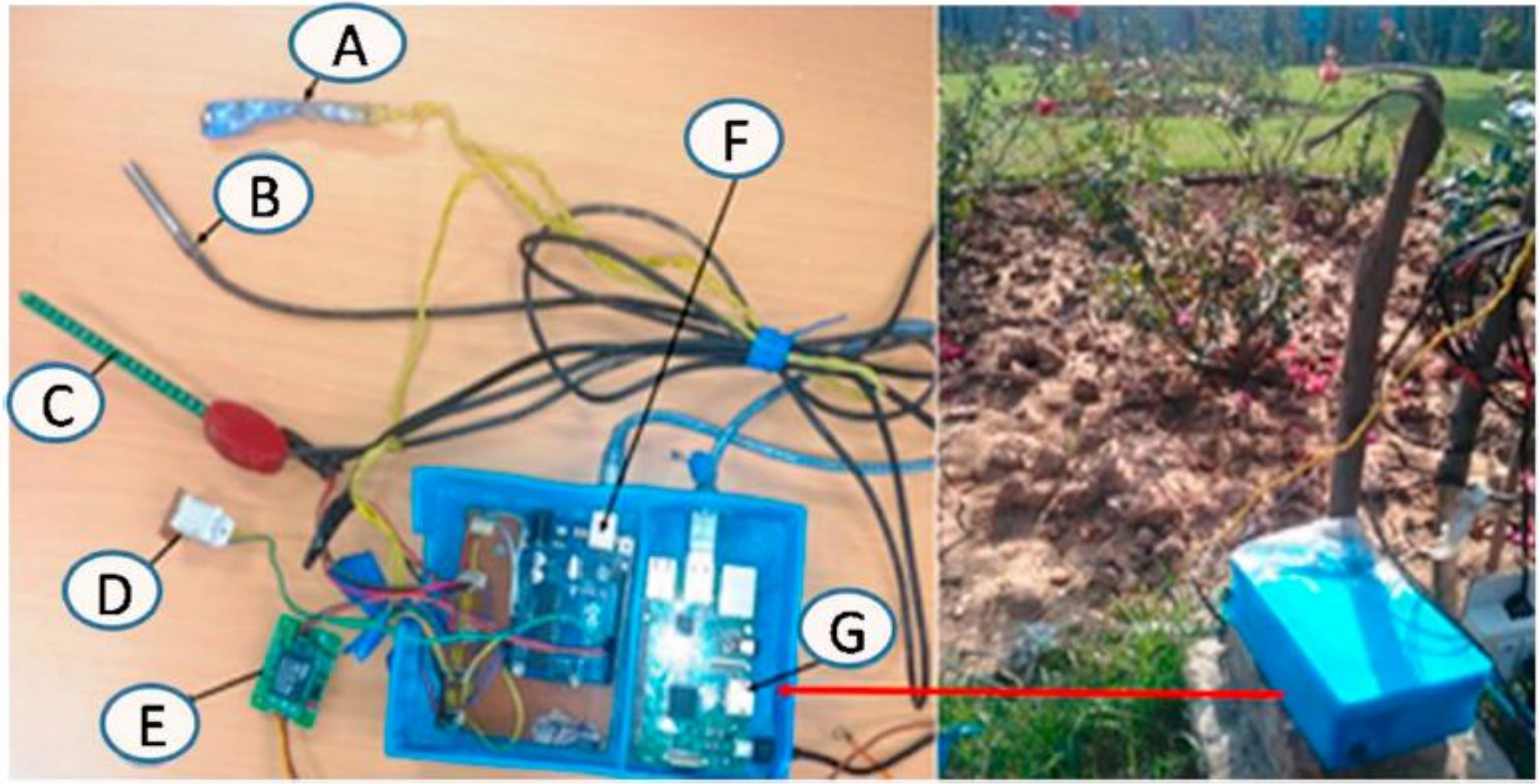

Field data collection device. [Legends A: UV Sensor, B: Soil Temperature Sensor, C: Soil Moisture Sensor, D: Air Temperature & Humidity Sensor, E: Relay Switch, F: Arduino Board, G: Raspberry Pi]

Example 5 : Heavy metal detection in waste

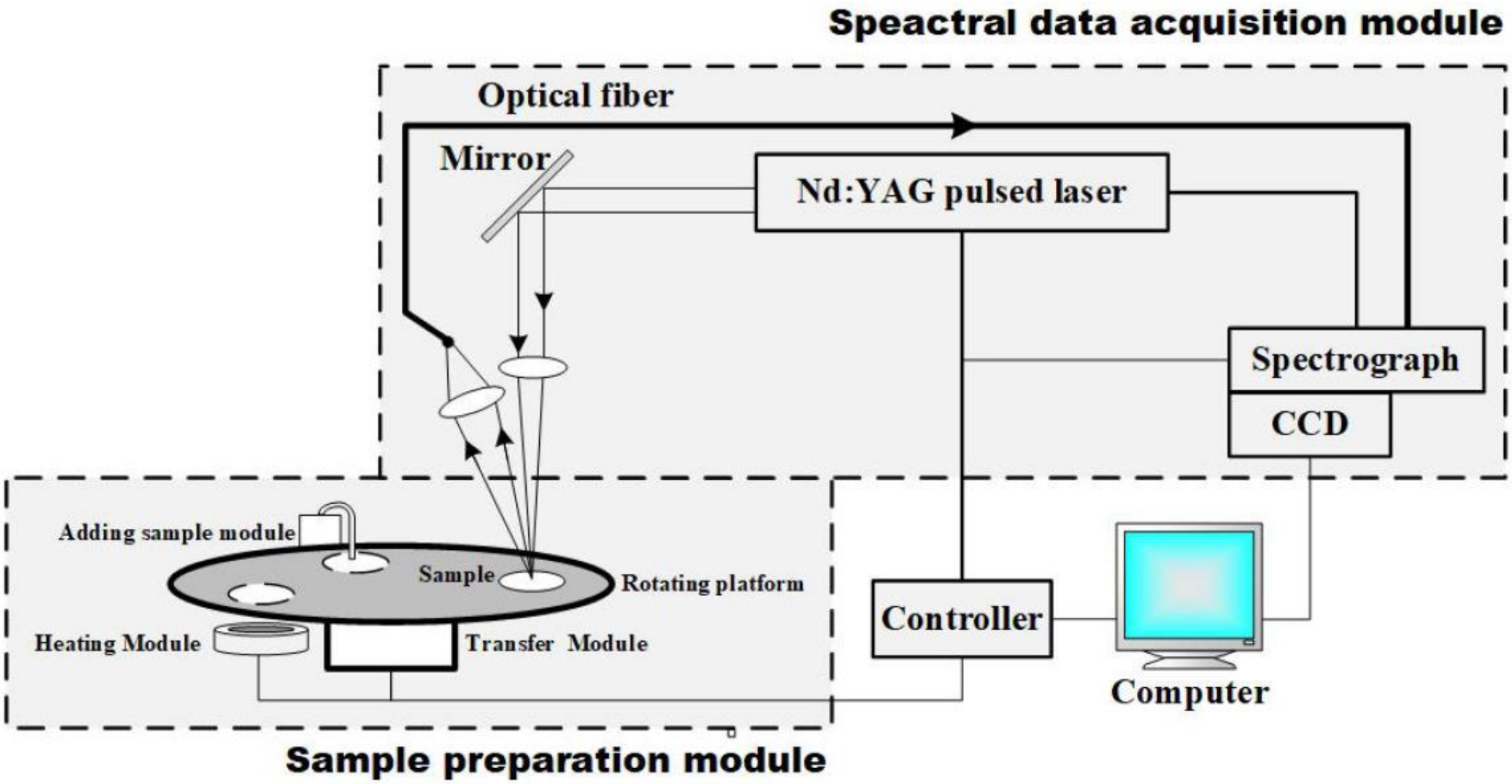

Example 6 : Vehicle collision avoidance

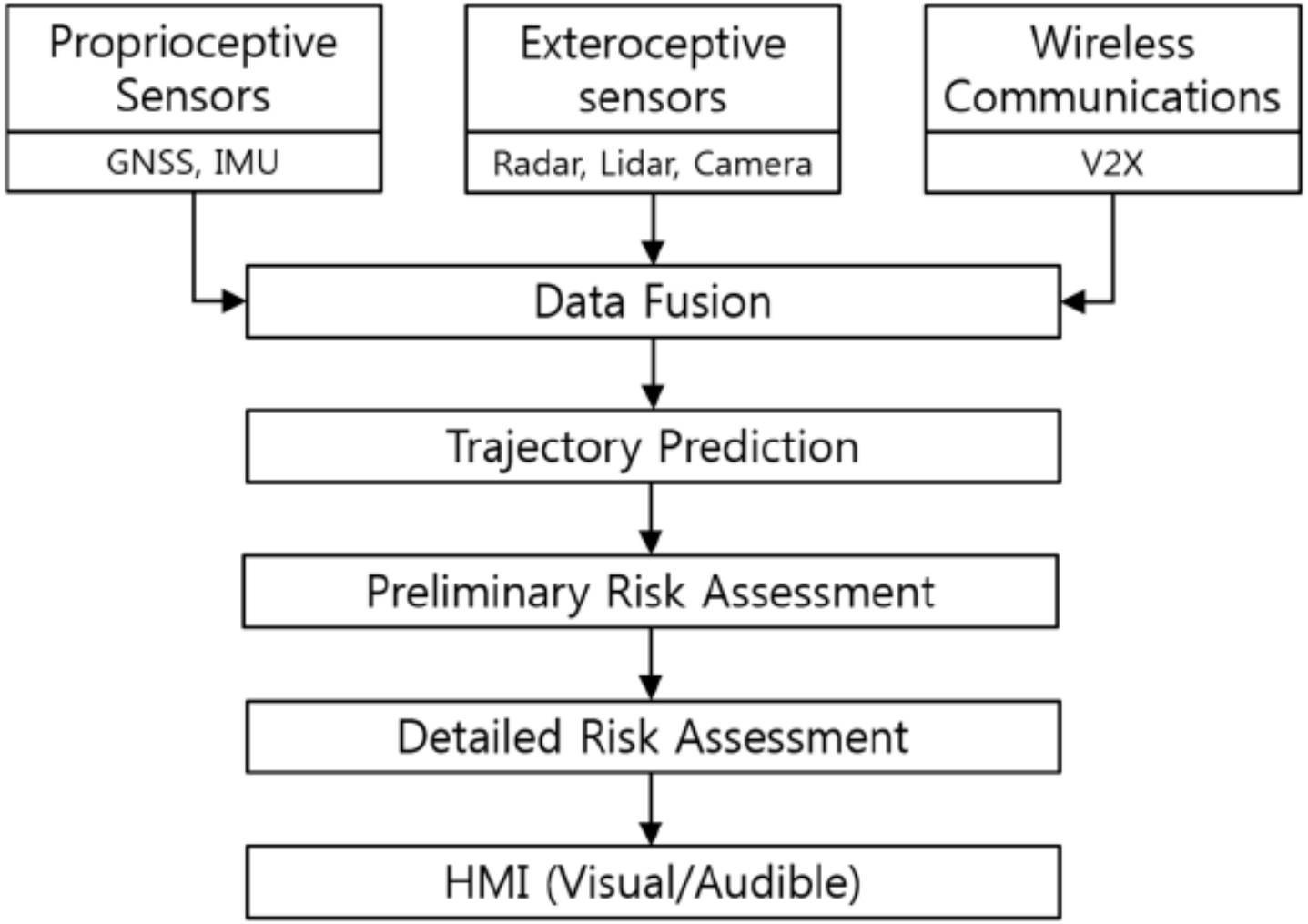

Example 7 : Living biomass sensing in bioreactors

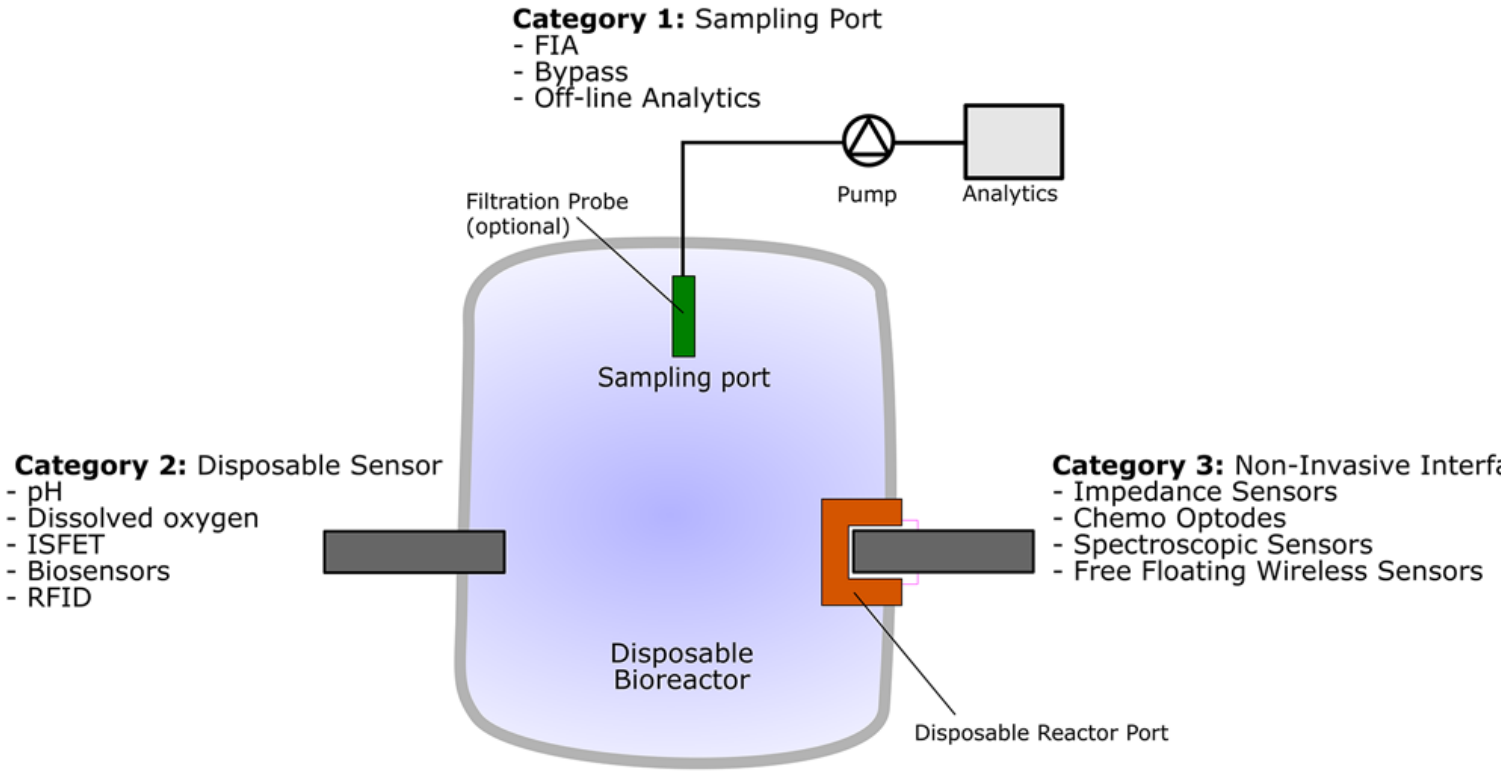

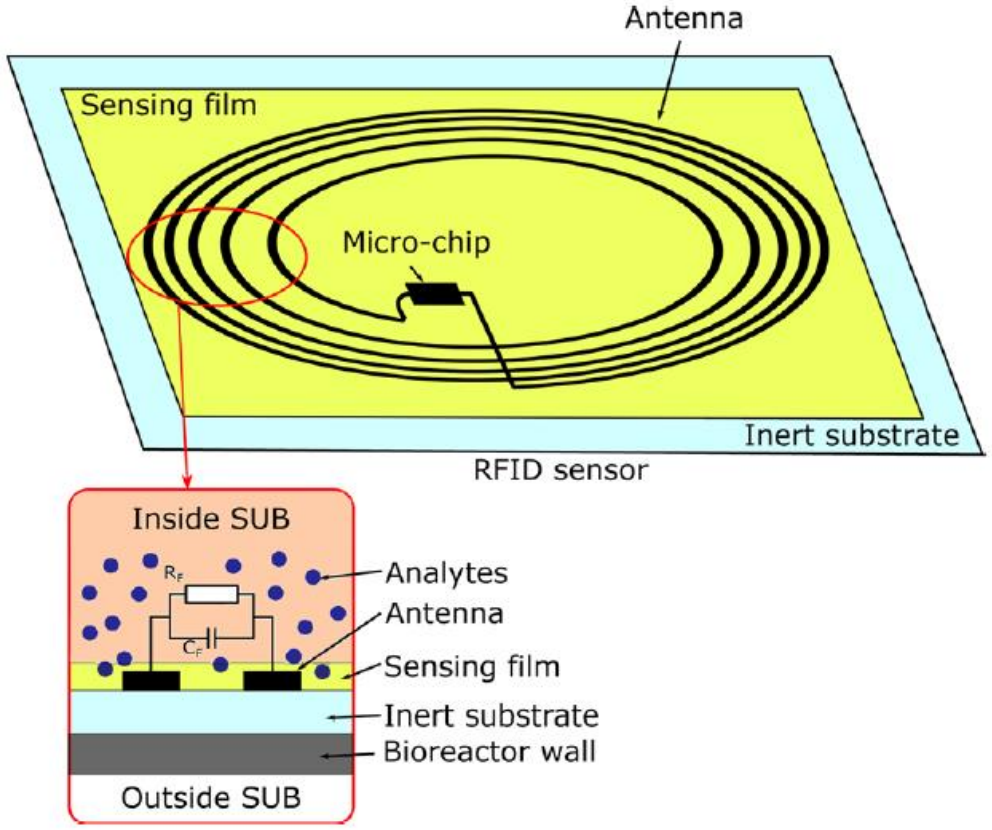

Example 8 : Exhaust gas composition

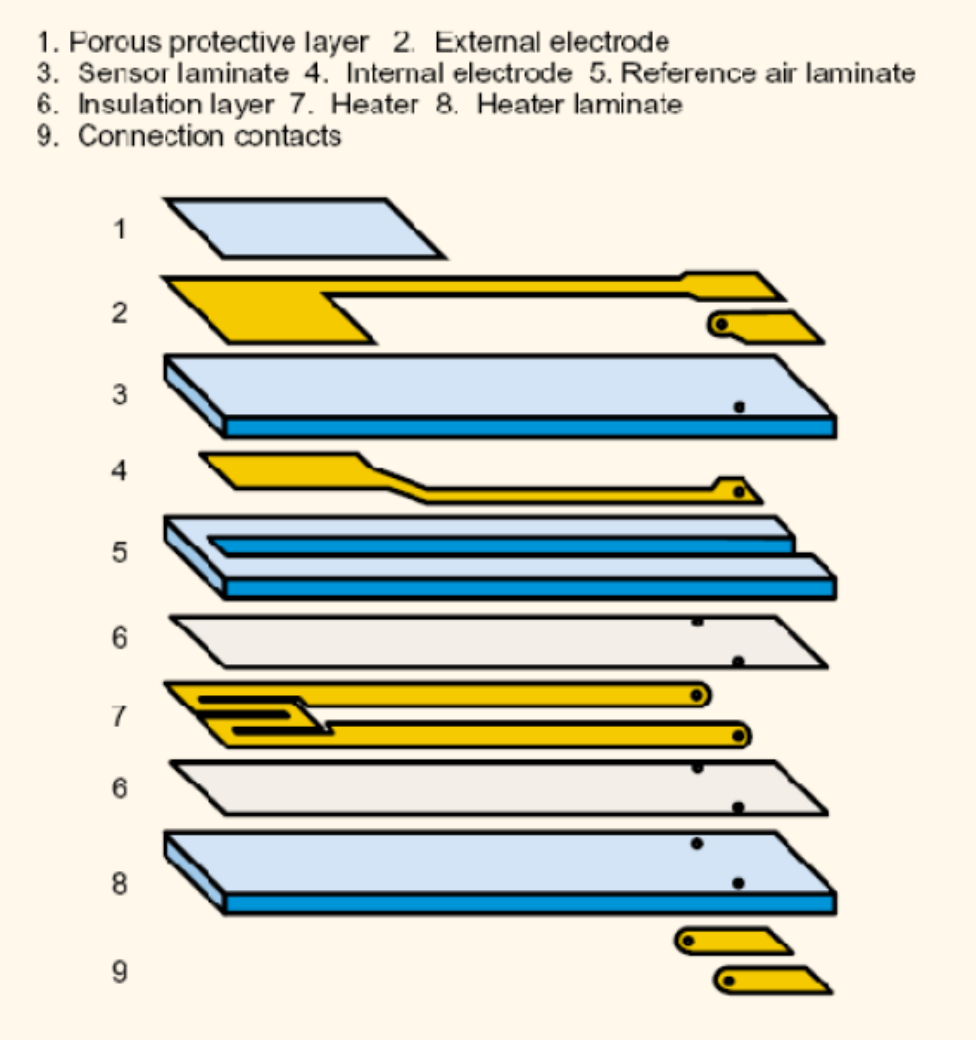

Planer-type sensor element layers

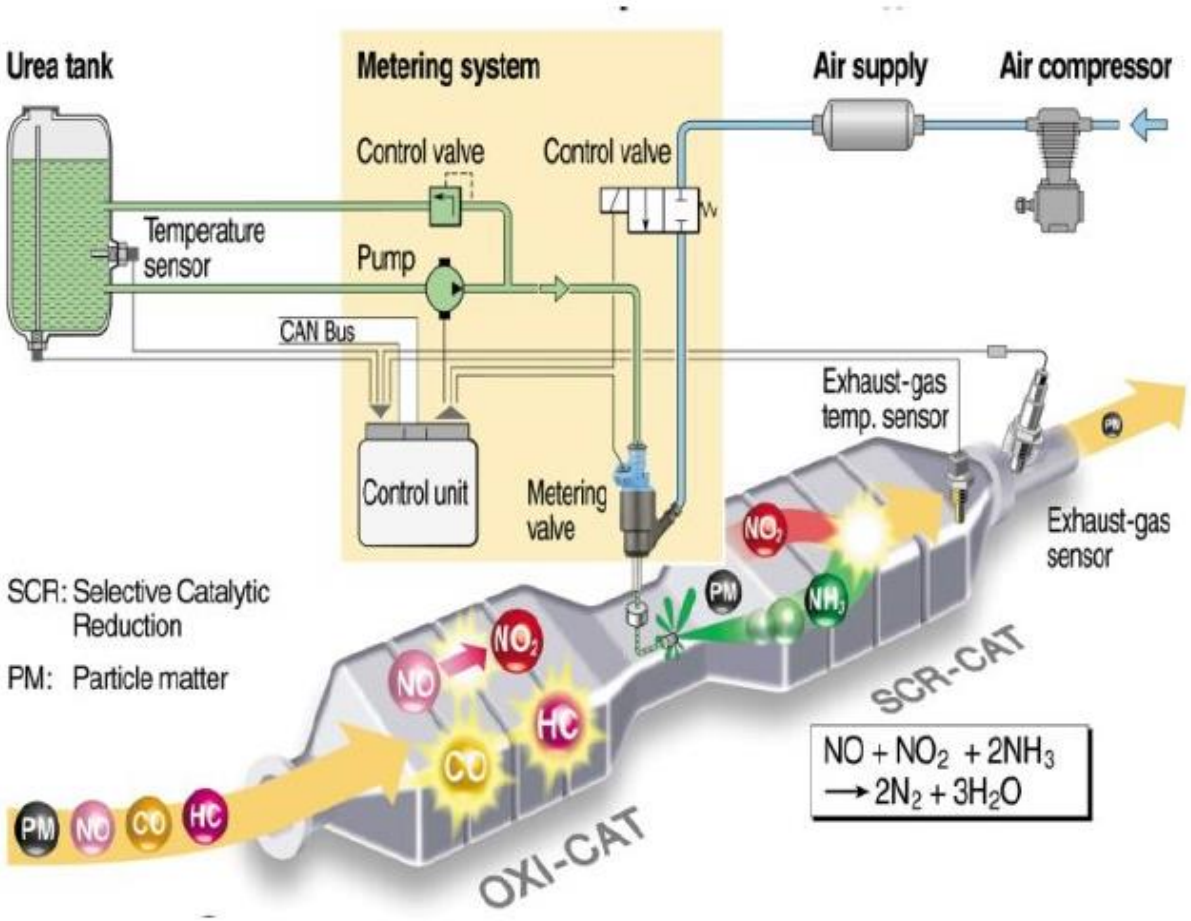

Example 9 : Wearable blood pressure monitoring

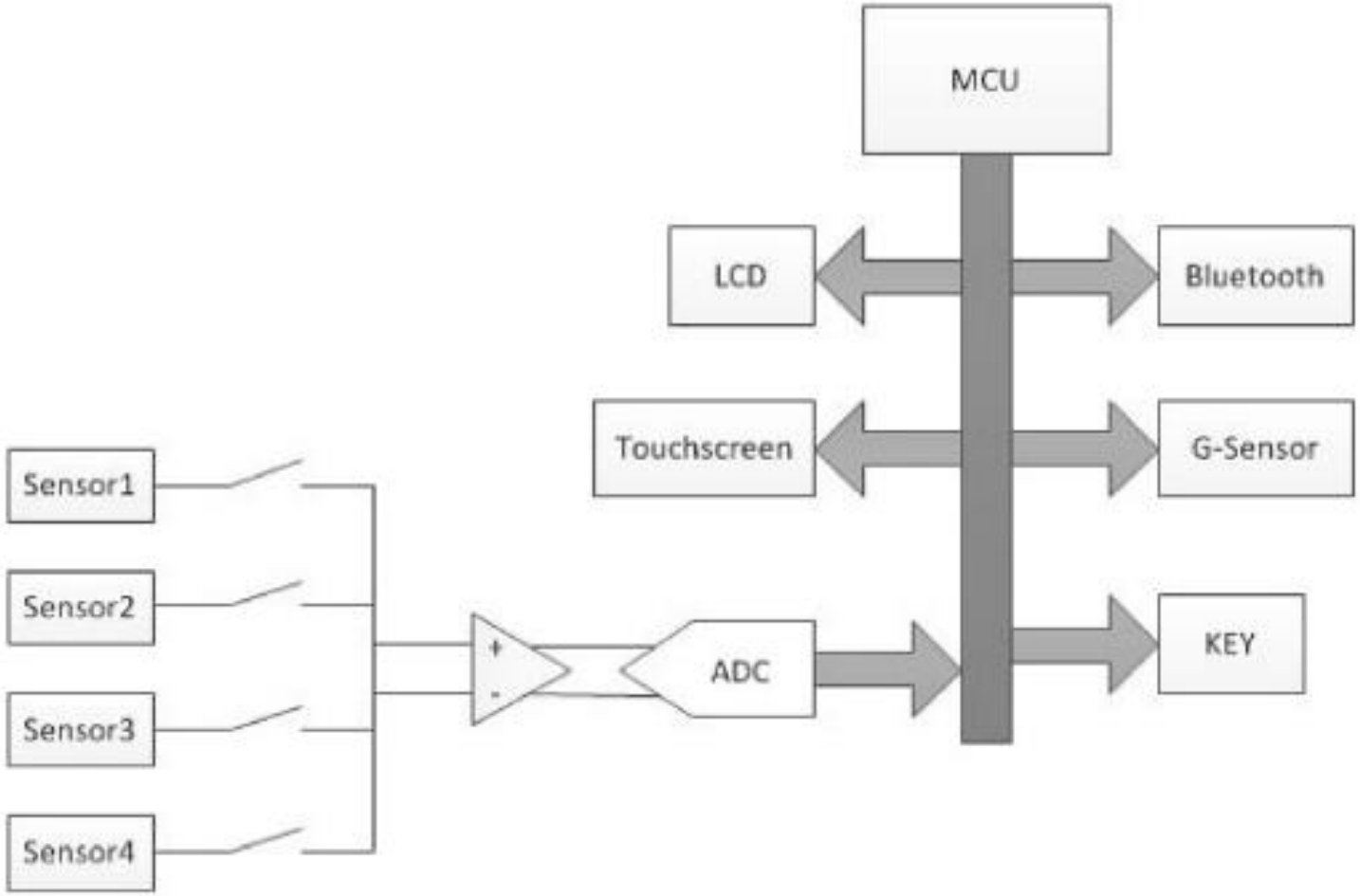

Architectural design of a smart sensor

- Define end function and performance goals
- Describe functions of the different layers of the sensor
- Choose a physical sensing principle
- Design electronic interface circuits
- Develop signal processing algorithms
- Define environmental conditions
- Define communication interfaces: type, data rate
- Choice of implementation technology
- Budgets: computational load, mass, volume, power dissipation

Work to do

- Form groups of 3 students
- Choose one of the smart sensor examples
- Search for more litterature
- Prepare a presentation (min. 1 slide per architectural design topic)
  - 3 topics per student
  - Prefer figures and sketches
  - Give as much quantitative information as possible
- Present your work to your colleagues, in 10 minutes max.

Sensing Principles

- Sensing methods
  - Examples
- Objectives
  - Examples
- Exercices

Objectives

1 – Maximize sensitivity

2 – Simple sensing head

3 – Robust to parasitic influences

4 – Cheap (monolithic)

5 – Non invasive (contactless)

6 – Built-in self test

7 – Bandwidth

8 – Precision (linearity)

(1) Maximize sensitivity

Example: Use of NTC instead of Pt100 for building automation

Pt100 temperature range e.g. -50°C…+150°C (depends on packaging), sensitivity = 0.39%/°C

NTC temperature range e.g. -30°C…+50°C (depends on packaging), sensitivity non-linear, around 15°C

$$R(T) = R_0 \cdot e^{\beta \cdot \left(\frac{1}{T} - \frac{1}{T_0}\right)}$$

$$\alpha = \frac{dR}{R \cdot dT} = \frac{-\beta}{T^2}$$

(2) Simple sensing head

Example: LVDT ⟶ Eddy current proximity sensor

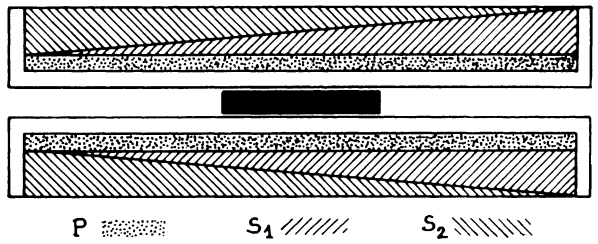

Forme et disposition des bobinages améliorant la linéarité et augmentant l'étendue de mesure

$$Z_1 = R_1 + j\omega L_1$$

$$Z_2 = R_2 + j\omega L_2$$

$$M = k\sqrt{L_1 L_2}$$

$$R_{1eq} = R_1 + k^2 \frac{L_1}{L_2} R_2$$

$$L_{1eq} = L_1\left(1 - k^2\right)$$

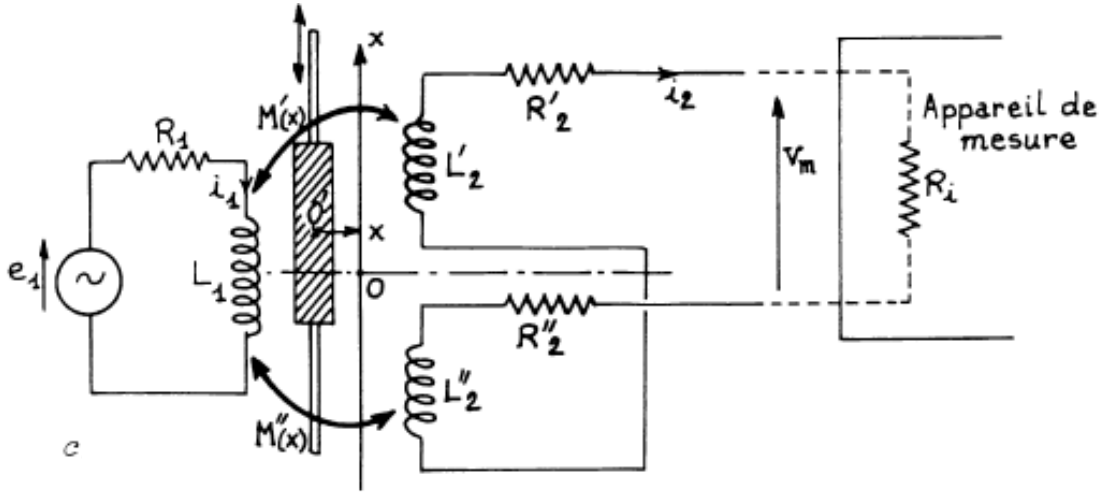

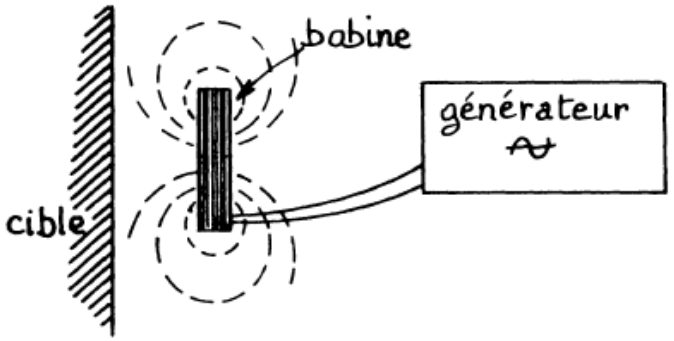

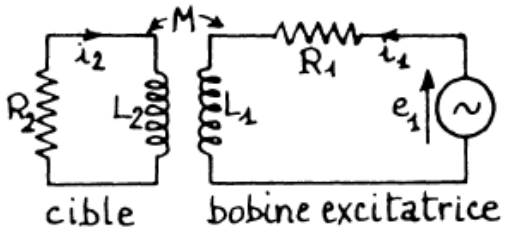

(3) Robust to parasitic influences

If the principle of sensing is differential, common mode influences can be rejected.

Example: Bridge of Hall sensors

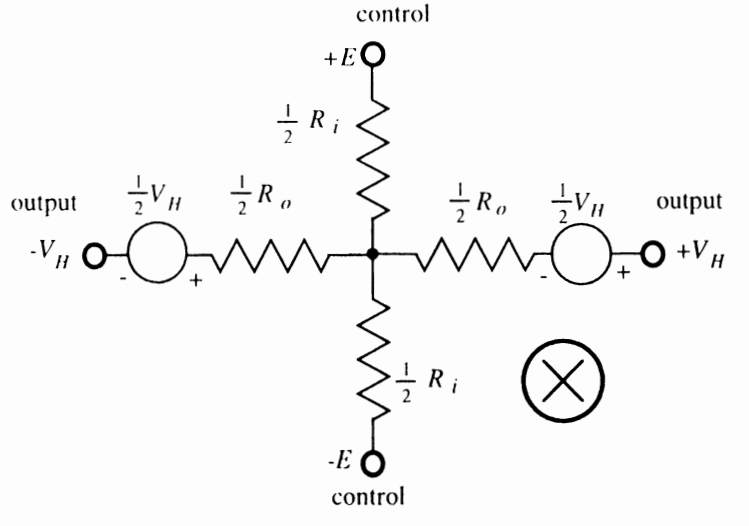

Equivalent circuit of a Hall sensor.

Typical characteristics of a linear Hall Effect sensor (source [25]).

Control current	3 mA
Control resistance, R_i	2.2 kΩ
Control resistance vs. temperature	+0.8%/°C
Differential output resistance, R_o	4.4 kΩ
Output offset voltage	5.0 mV (at B = 0 Gauss)
Sensitivity	60 μV/Gauss
Sensitivity vs. temperature	+0.1%/°C
Overall sensitivity	20 V/ΩkG
Maximum magnetic flux density, B	unlimited

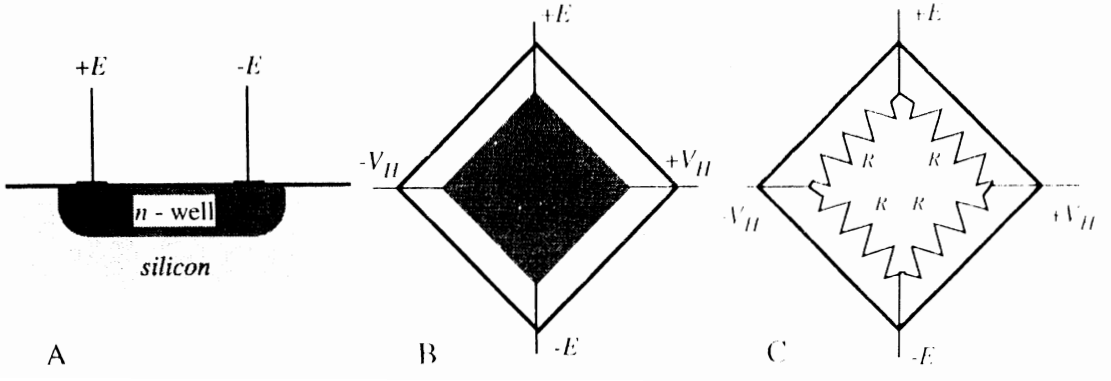

(3) Compensation of offset

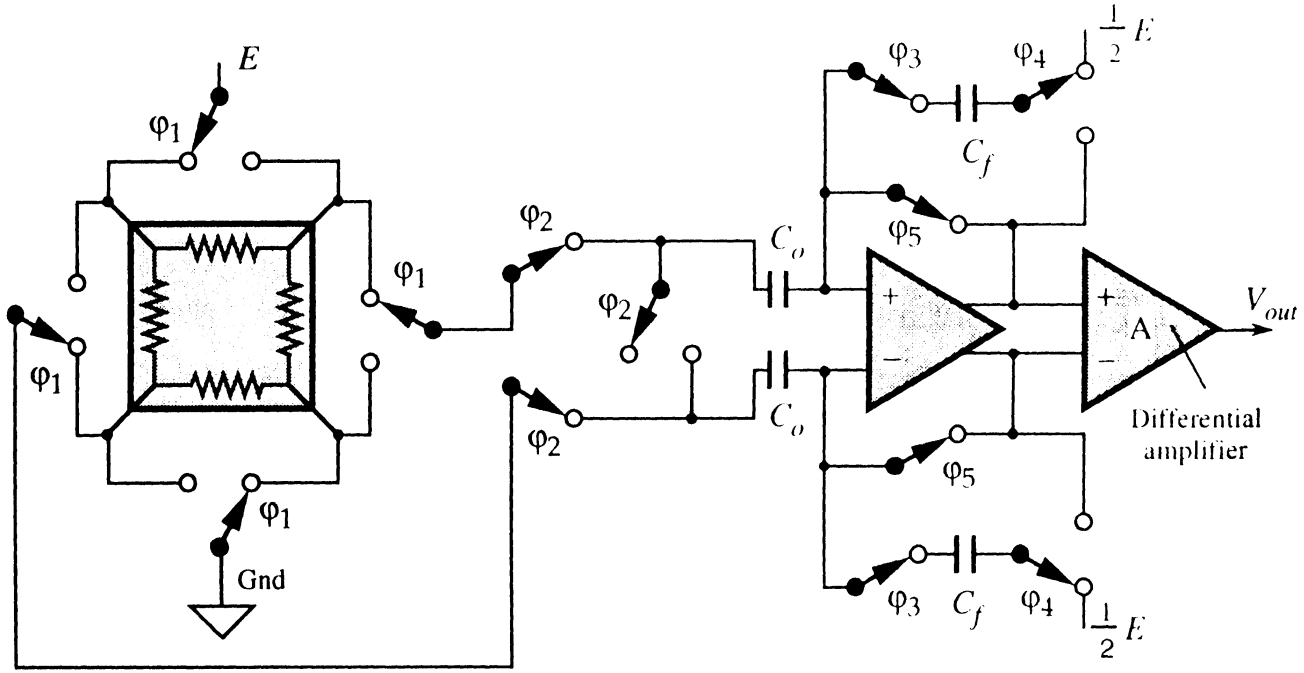

Switched-capacitor circuit for cancellation of offset in a Hall sensor.

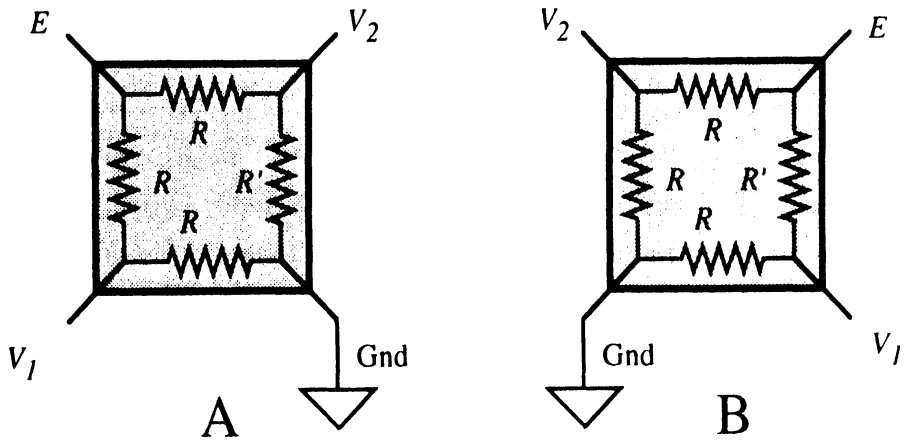

Equivalent circuit of a Hall sensor with two different methods of connection.

(3) Compensation of offset

Exercice: Make a Spice simulation of this circuit

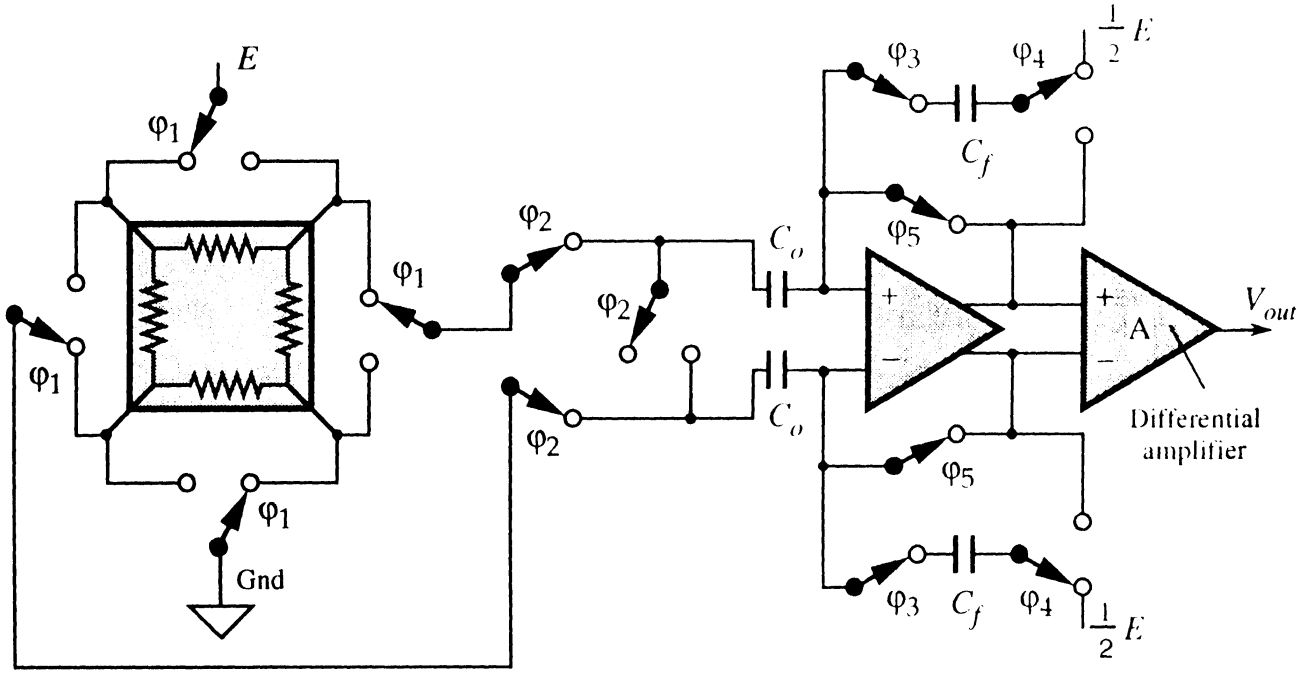

Switched-capacitor circuit for cancellation of offset in a Hall sensor.

(4) Cheap (monolithic)

Example: Integrated accelerometers

Operation with force feedback:

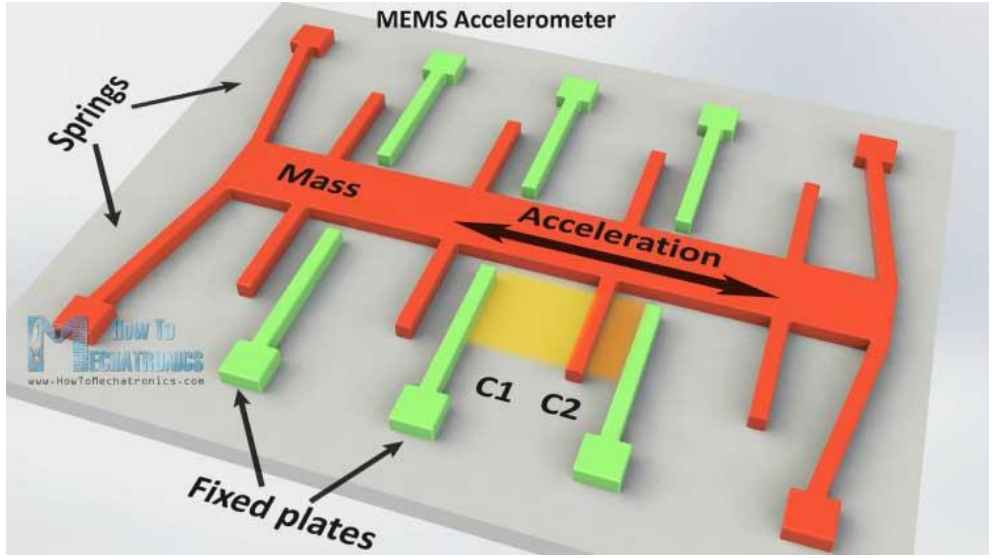

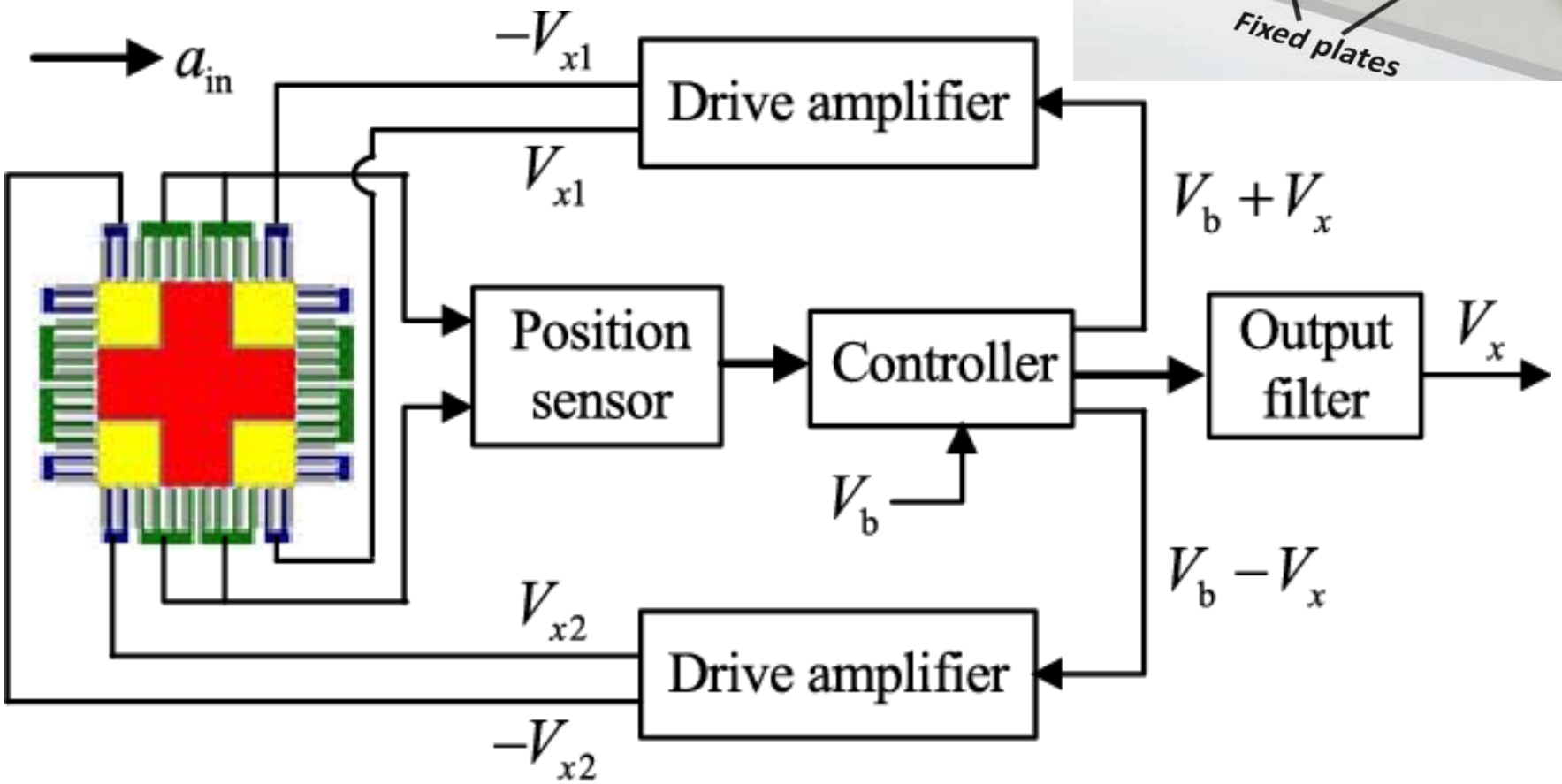

(4) Cheap (monolithic)

Exercice: Estimate the capacitance of a comb structure

- 16 bars
- Bar dimensions: length 200µm, heigth 20 µm, width 20µm
- Distance between bars: 5µm on all sides

What is the displacement sensitivity of this capacitance?

(4) Cheap (monolithic)

Example: Integrated gyroscope

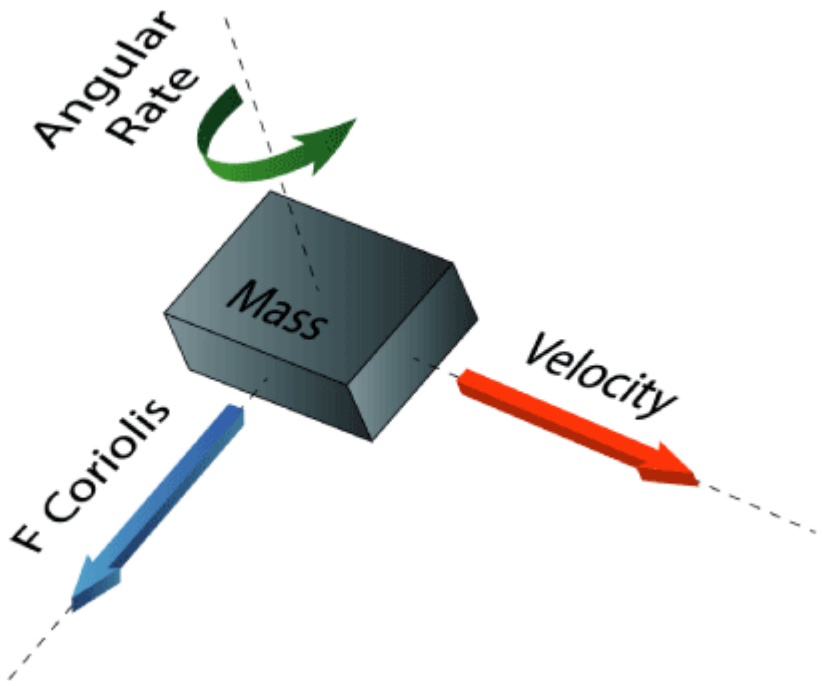

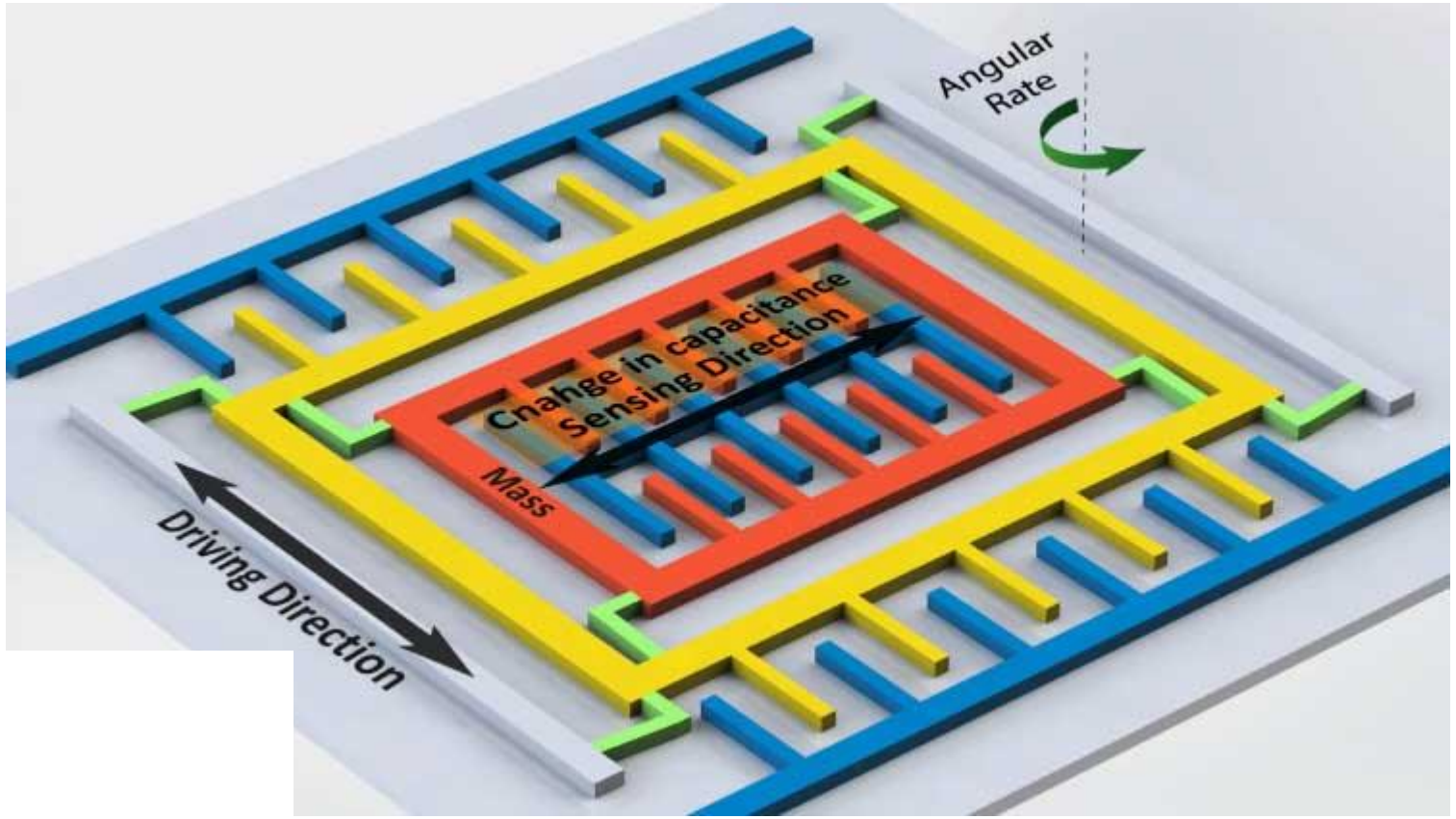

(5) Non invasive (contactless)

Example: LIBS = Laser Induced Breakdown Spectroscopy

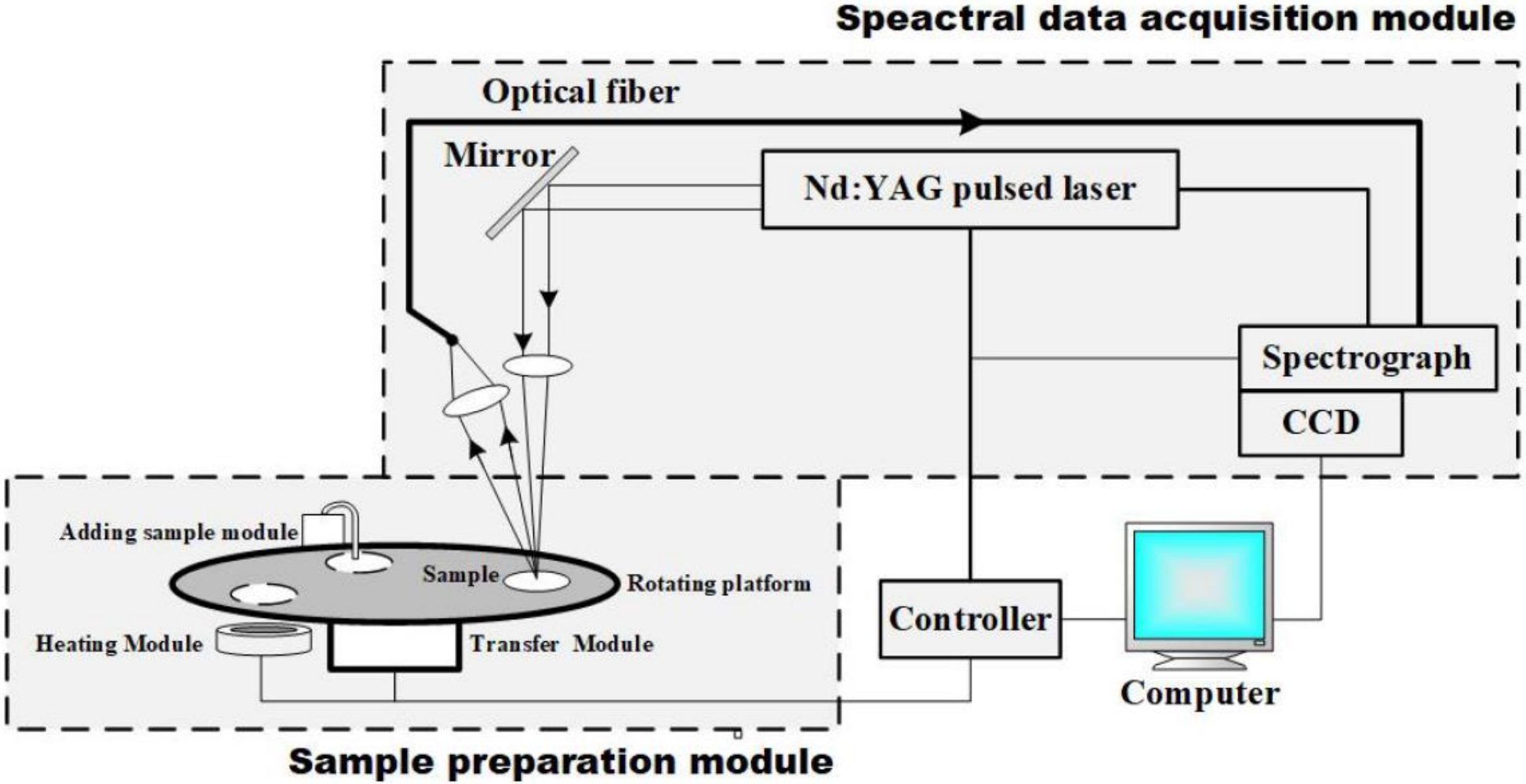

(6) Built-in self test

Example: Monitoring of sensor bridges

Burnout current sources and sgnal level monitoring

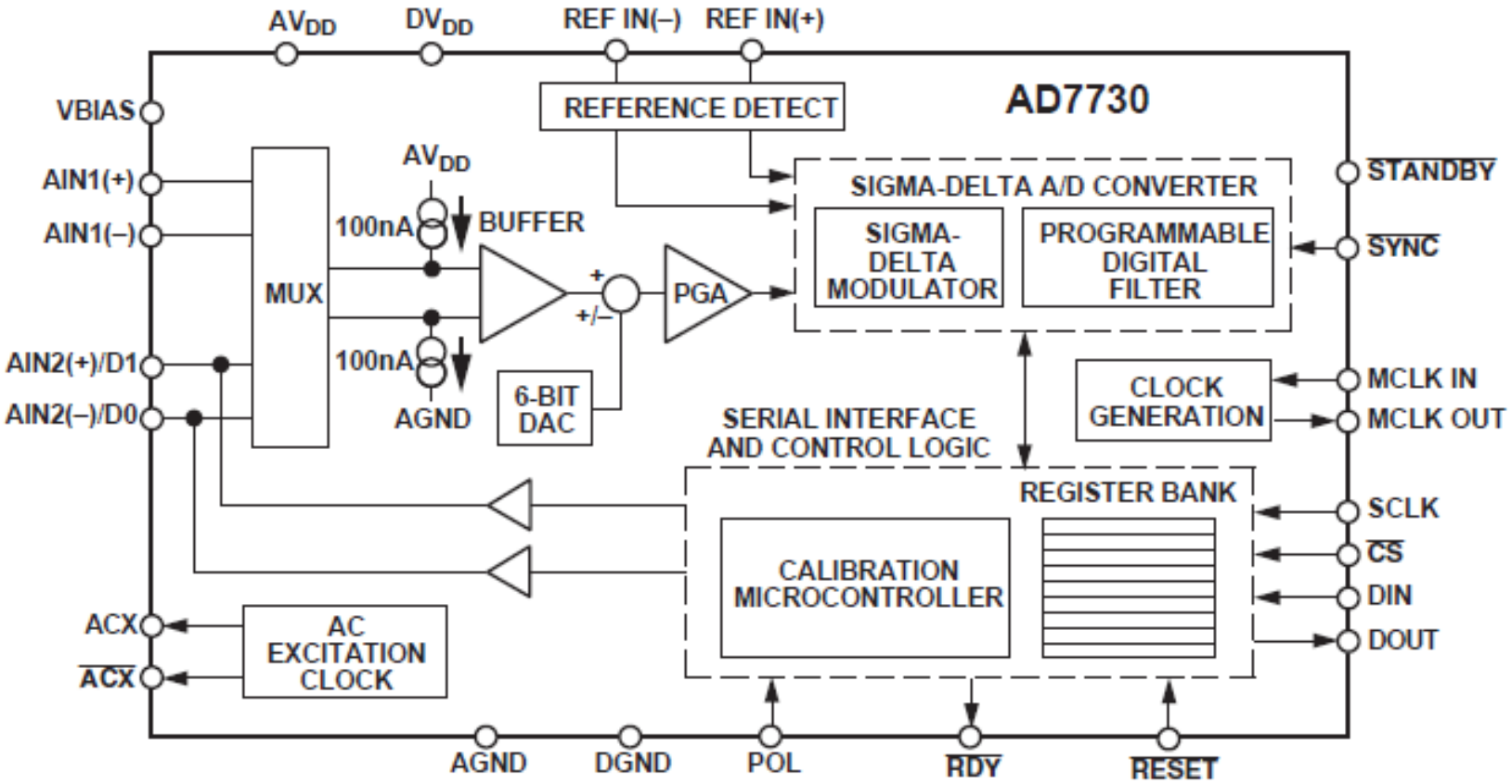

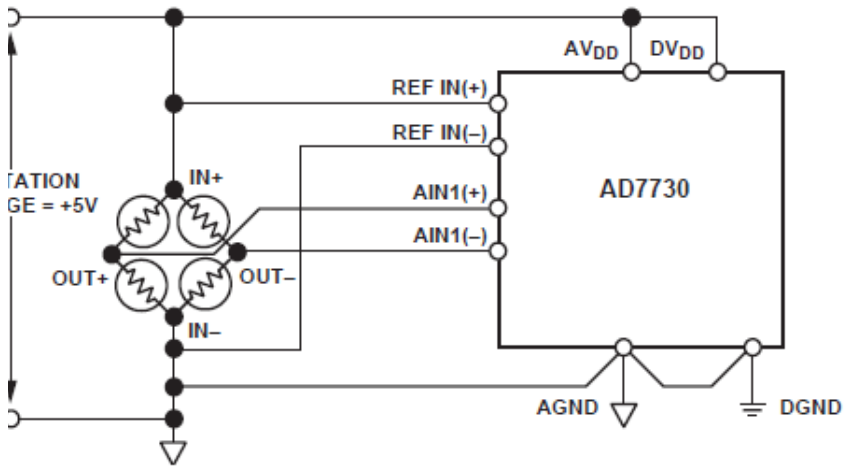

(7) Bandwidth

Example: Bandwidth of seismic measurements

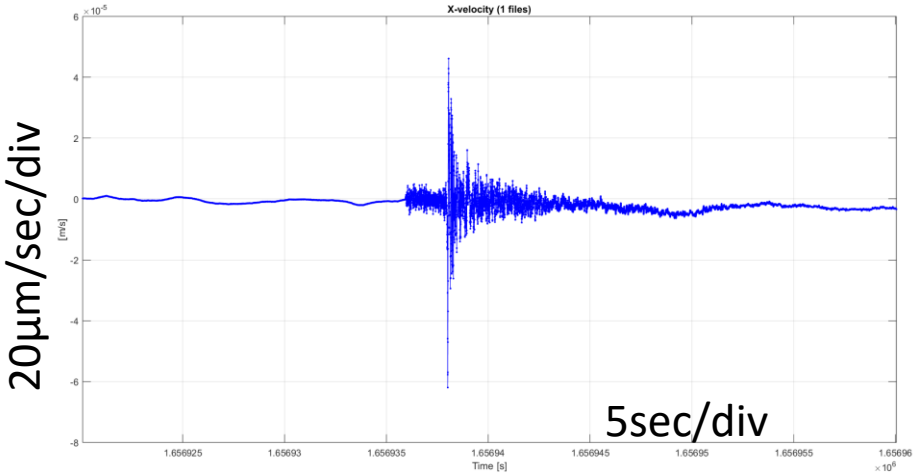

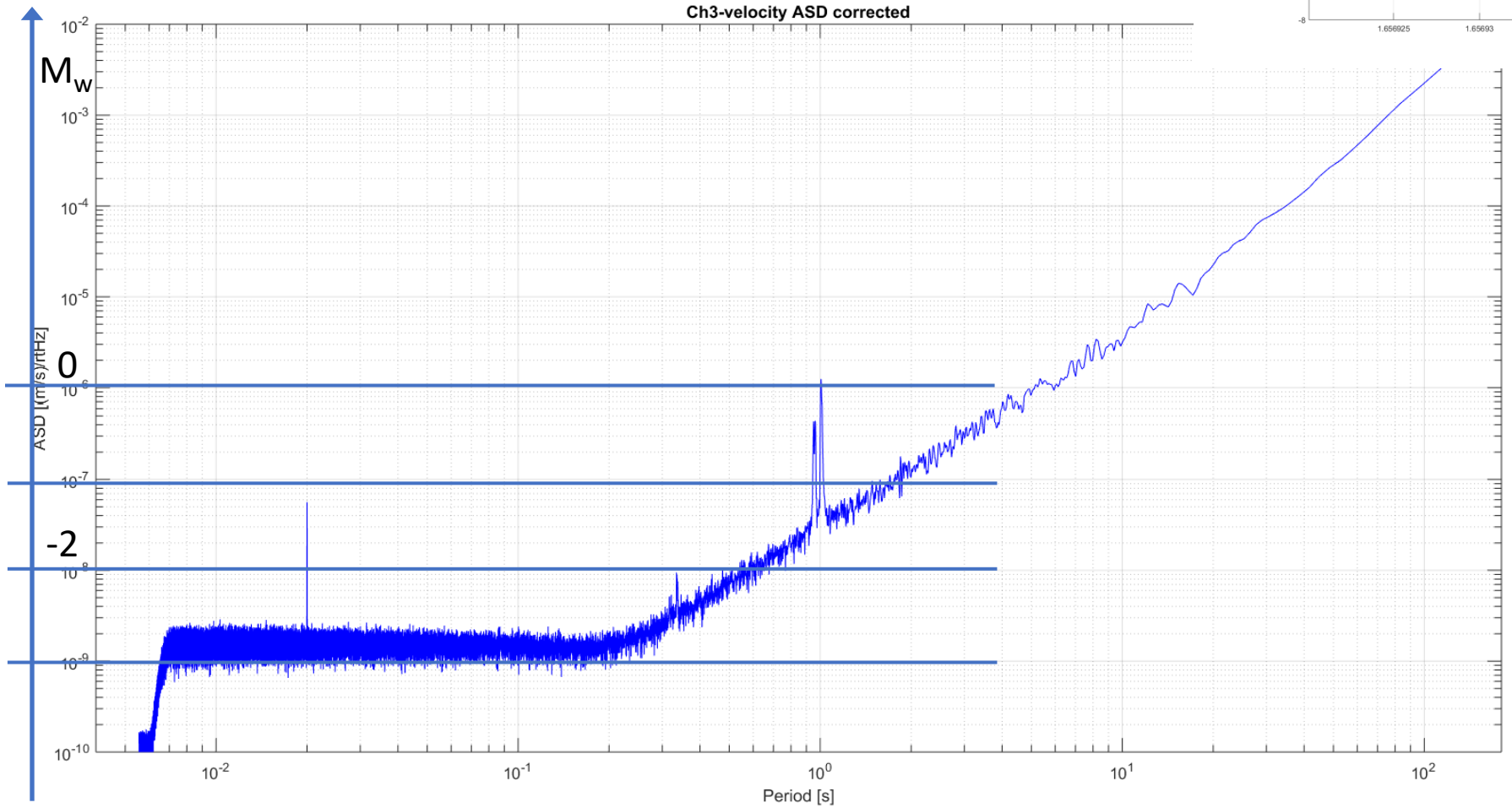

(8) Precision (linearity)

Example: ‘Fuel gauge’ of battery management system (BMS) senses state of charge (SoC) of Li batteries

Often combination of measured curren integration (Coulomb counter) and voltage measurement (temperature, age and load influences)

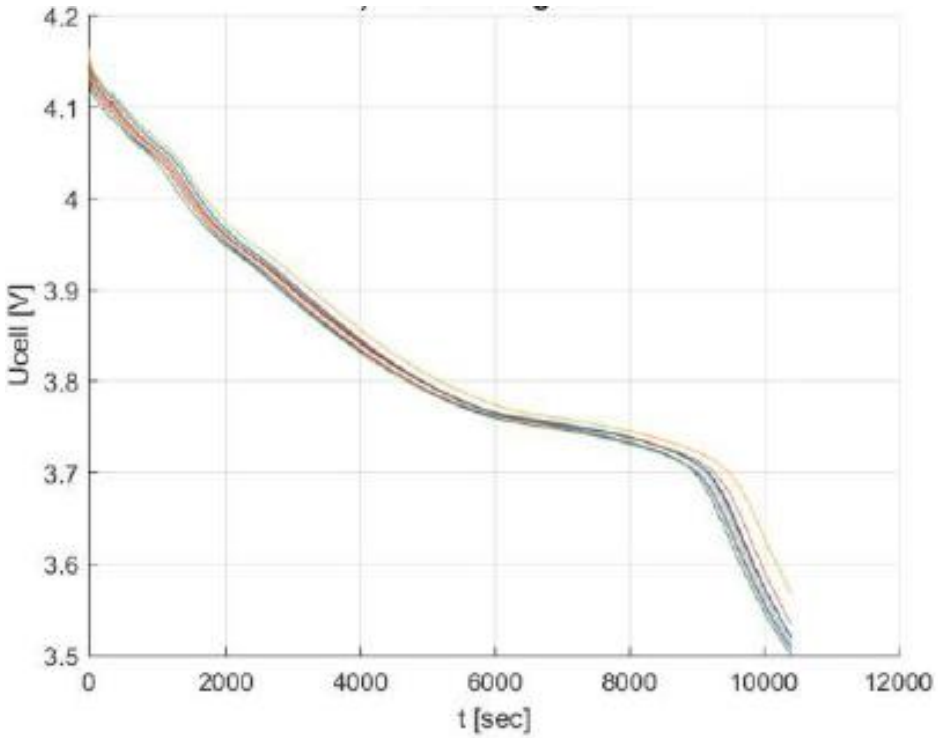

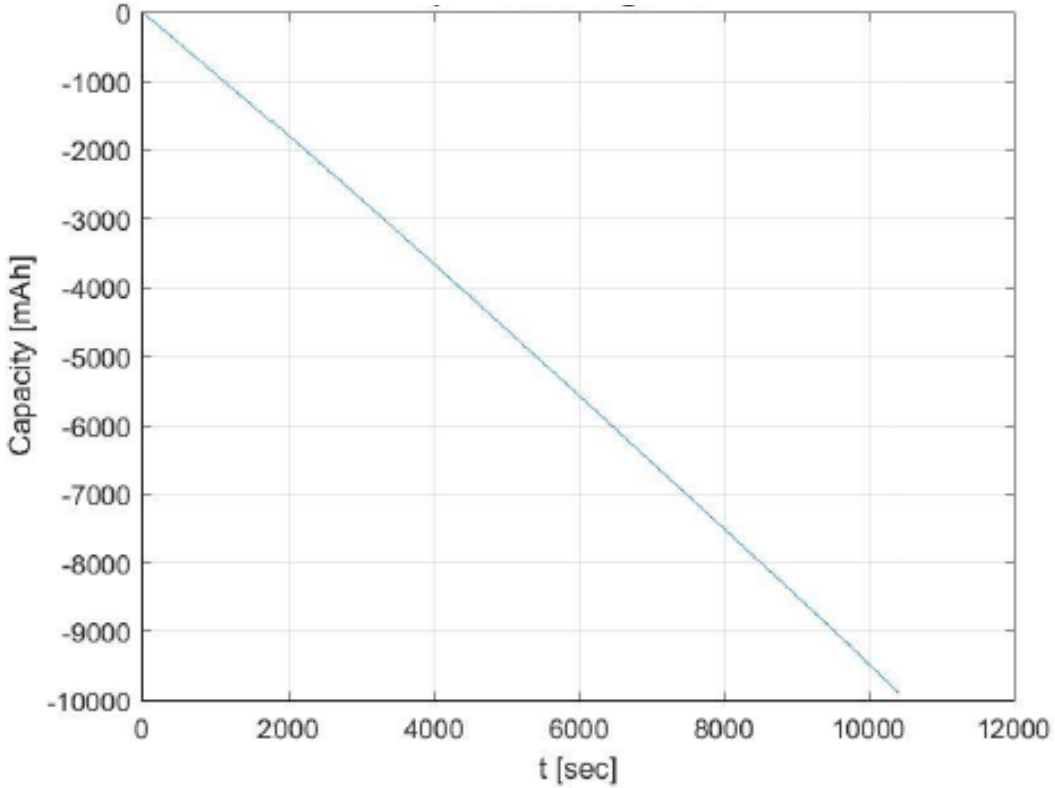

Methods

1 – Direction of sensing

2 – Differential sensing

3 – Absolute versus relative

4 – Contactless sensing

5 – Local / gloabel intensity sensing

6 – Change of material property

7 – Derived quantities

8 – Compensation sensing

(1) Direction of sensing: longitudinal

Distance measurement → proximity sensing

Example: parallel plate capacitor

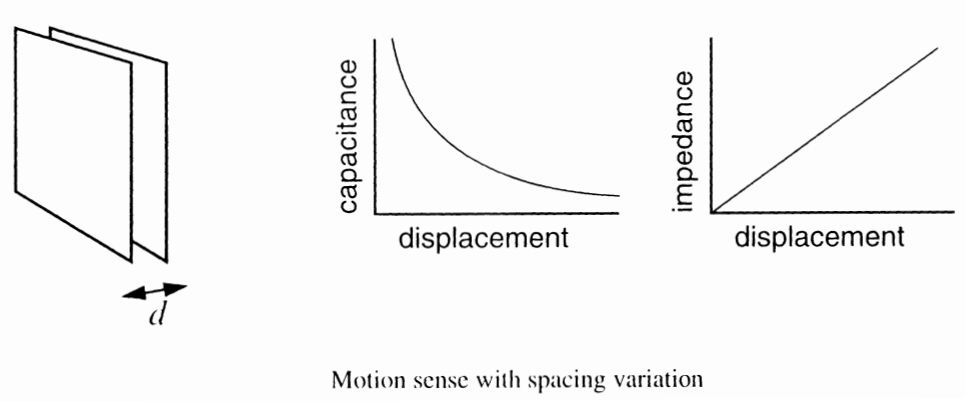

Motion sense with spacing variation

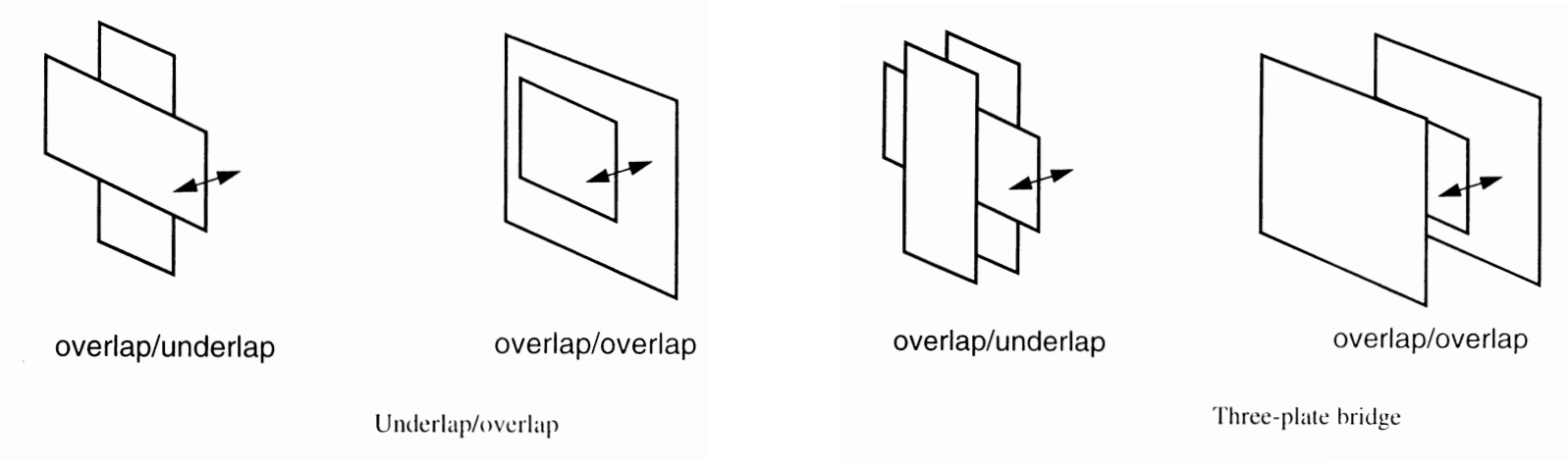

Underlap/overlap

Three-plate bridge

(1) Direction of sensing: transverse

Overlap measurement → incremental sensing

Example: parallel plate capacitor

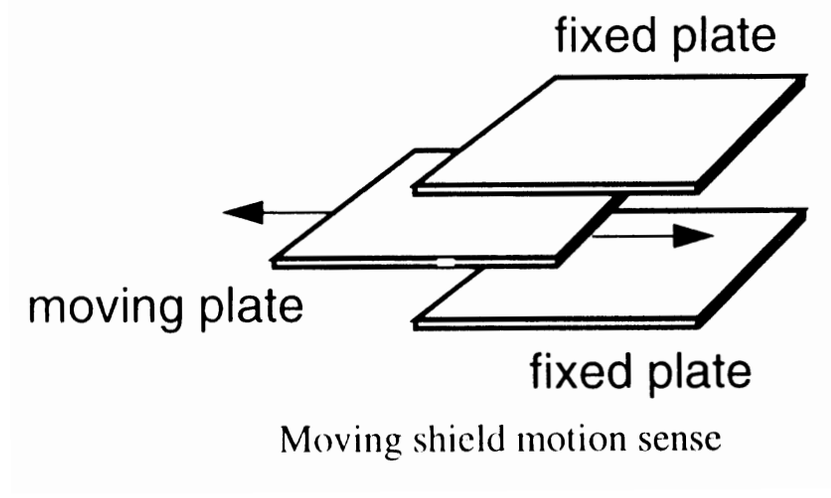

Moving shield motion sense

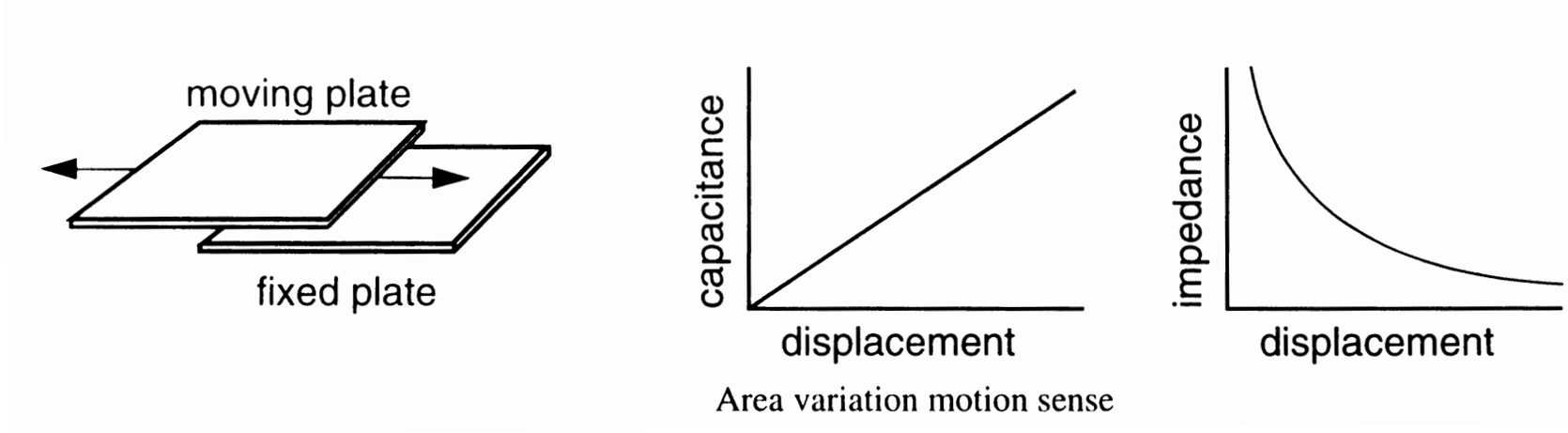

Area variation motion sense

(1) Direction of sensing: exercice

Capacitive caliper: explain the operation and design excitation and pickup signals

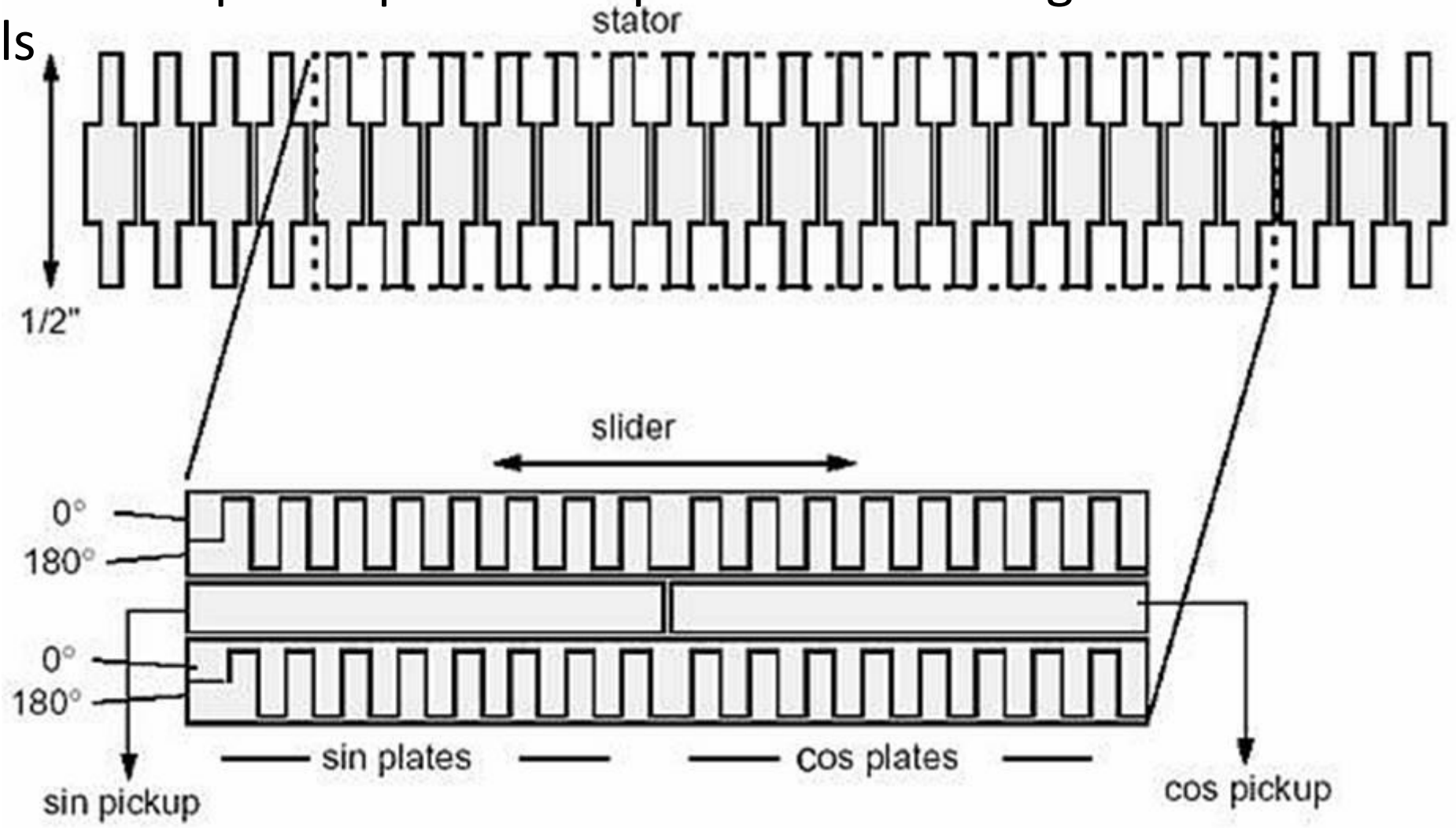

(2) Differential sensing

Example: capacitve displacement sensing

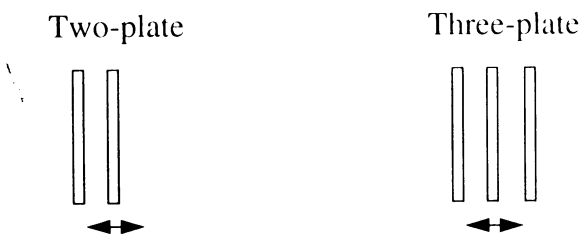

Two-plate and three-plate micrometers

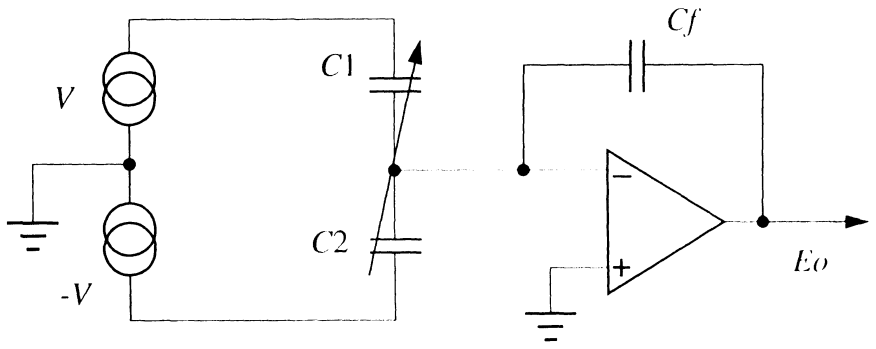

Three-plate micrometer

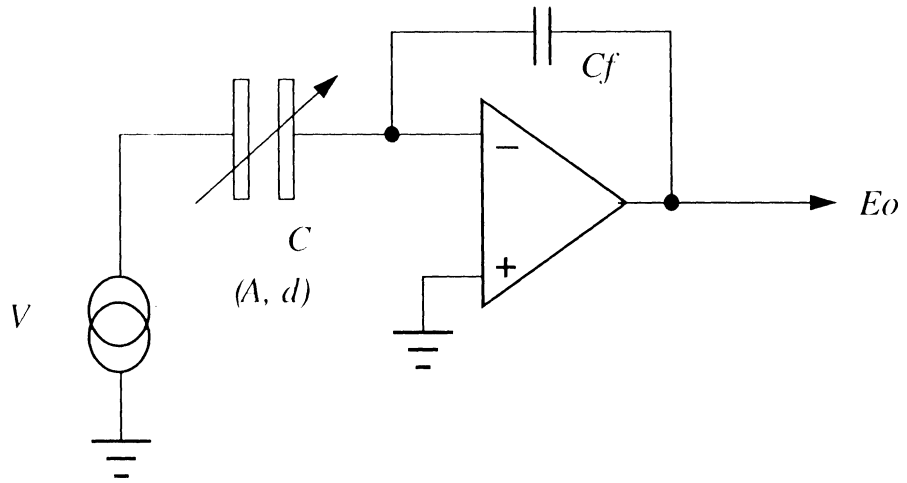

Two-plate micrometer

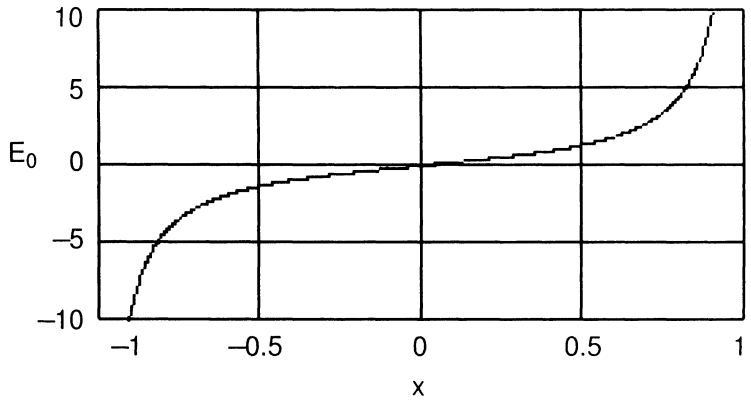

Three-plate micrometer transfer function

$$E_0 = -\frac{\varepsilon_0 \varepsilon_r A}{C_f d} V$$

$$E_0 = \frac{C_1 - C_2}{C_f} V = \frac{2x}{d_0^2 - x^2} \frac{C_0}{C_f}$$

(2) Differential sensing

Exercice: explain the principle of operation of the inductive sensor below:

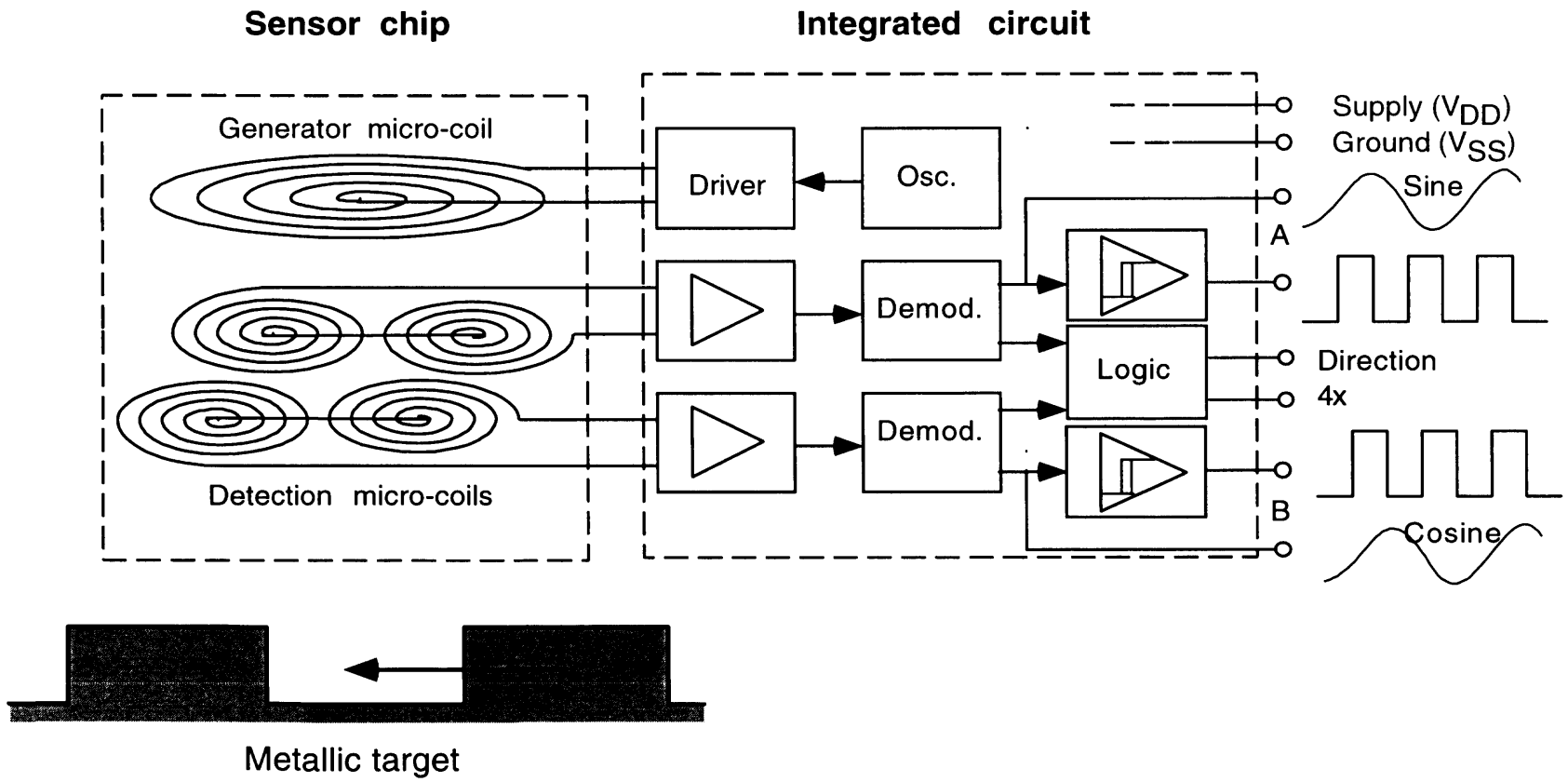

(3) Absolute versus relative measurement

Example: optical rotary encoders

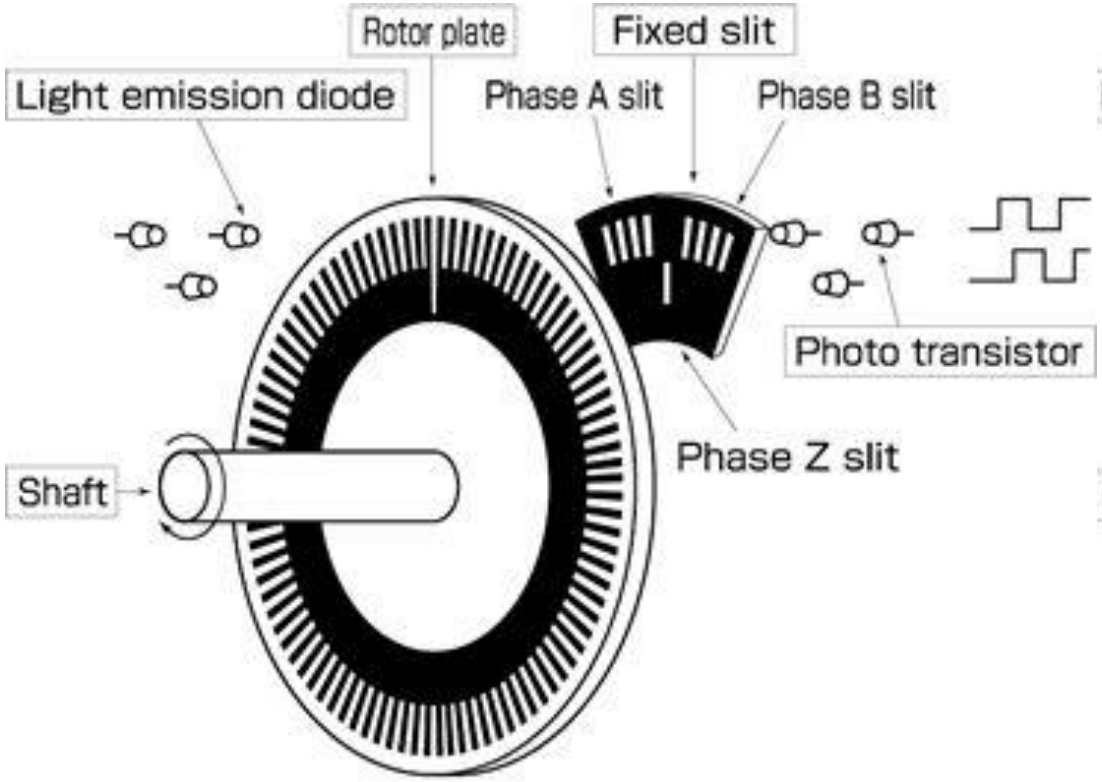

Incremental Encoder Simplified Structure

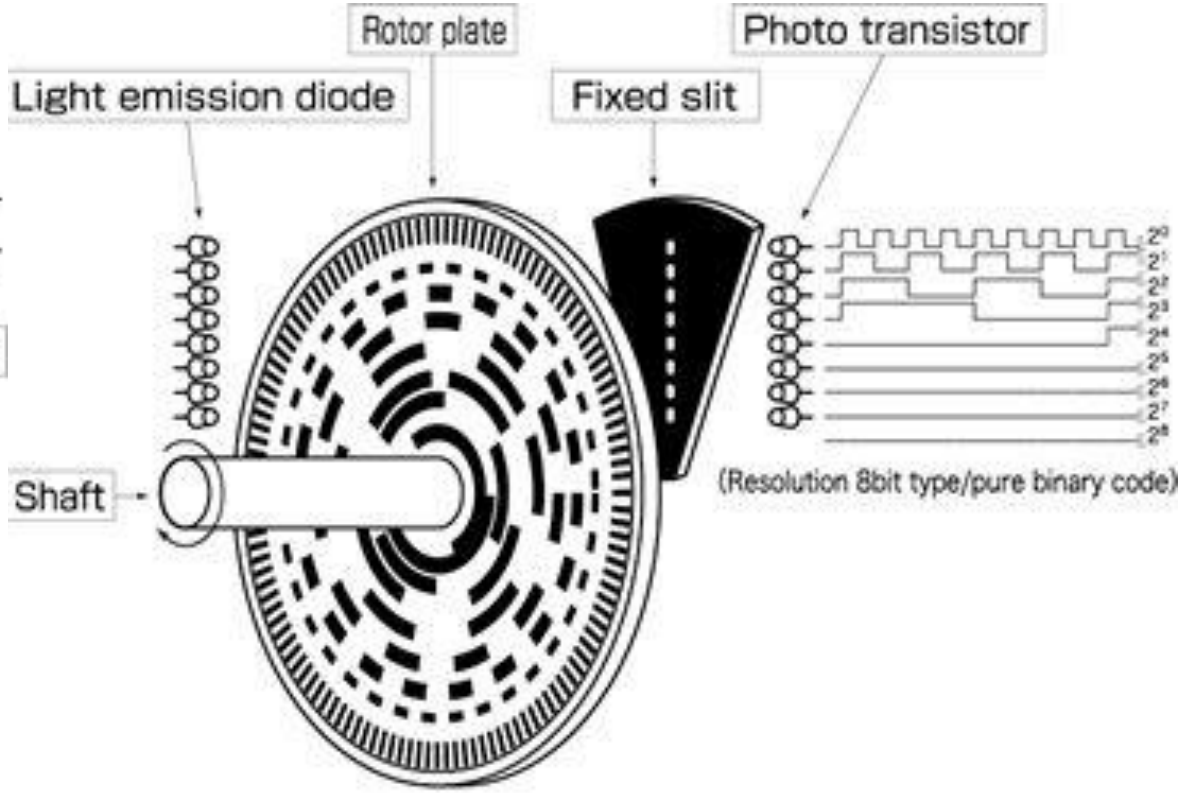

Absolute Encoder Simplified Structure

(3) Absolute versus relative measurement

Exercice:

Design at functional level an absolute capacitive rotary encoder

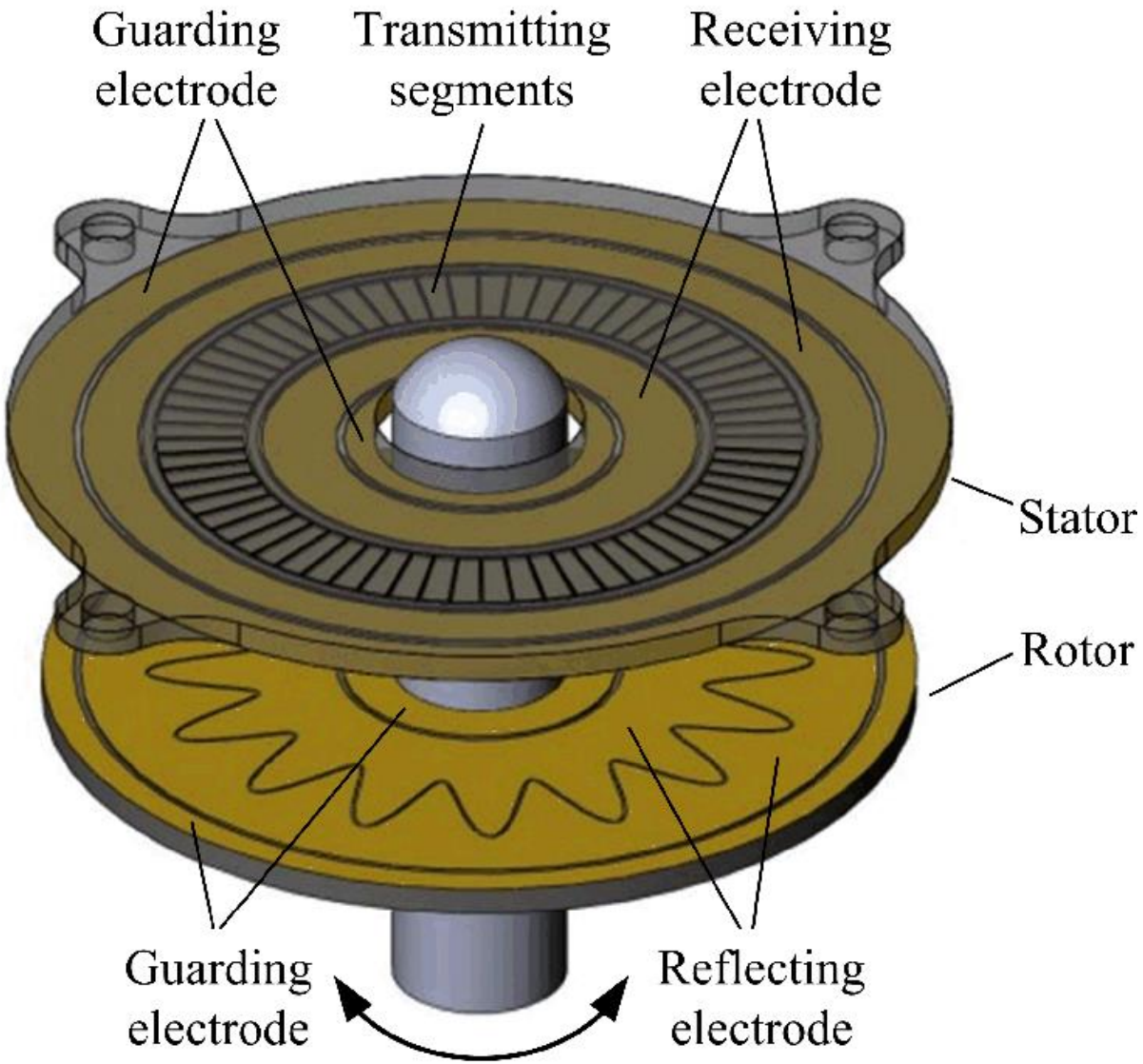

(4) Contactless sensing

The physical quantity which establishes a link between sensing head and object under test, is a field:

- (Quasi-)static magnetic field
- (Quasi-)static electric field
- Acoustic pressure field
- Propagating electromagnetic field (micro-waves, light)

(4) Contactless sensing: measureable quantities

- Primary detected quantity :
  - Local intensity (amplitude)
  - Total energy (impedance)
- Frequency (period length)
- Phase
- Propagation delay
- Polarisation

(5) Local intensity sensing

Example: Photodiode in an incremental sensor

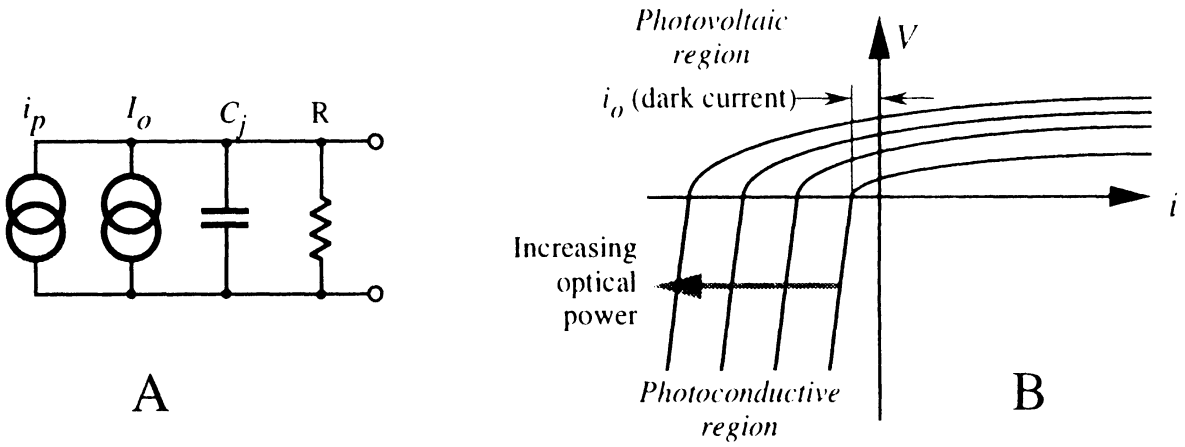

An equivalent circuit of a photodiode (A) and its volt-ampere characteristic (B)

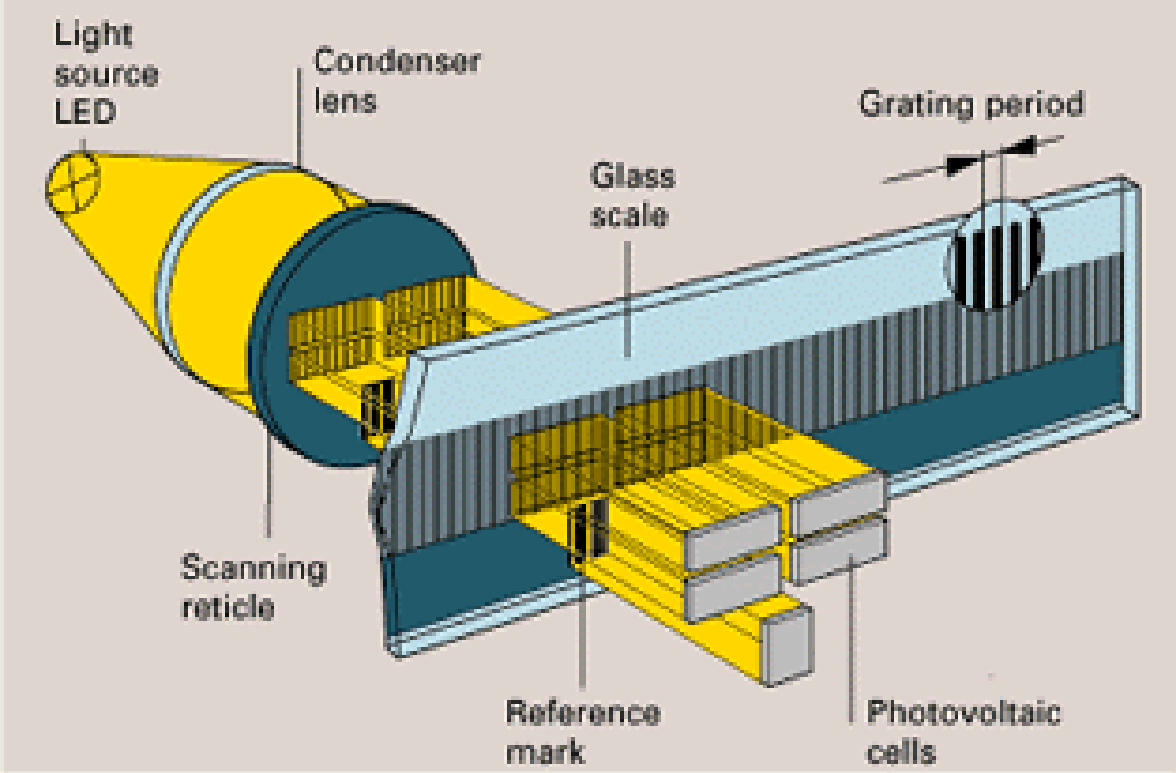

(5) Global intensity sensing

Example: PSD = Position Sensitive Diode

The ligth beam is smaller than the sensor

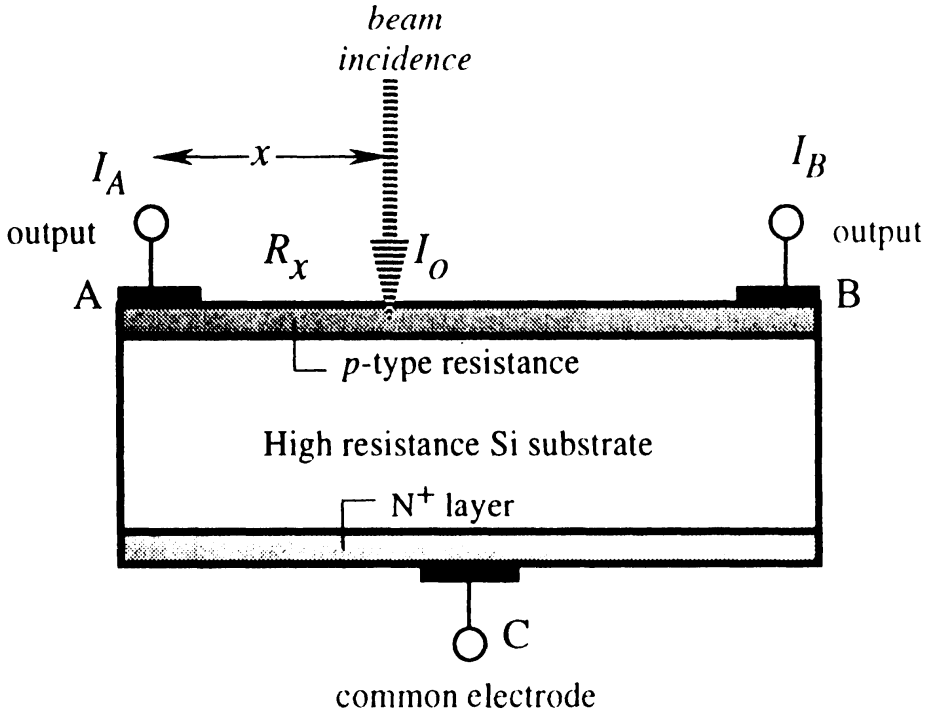

Design of a one-dimensional PSD.

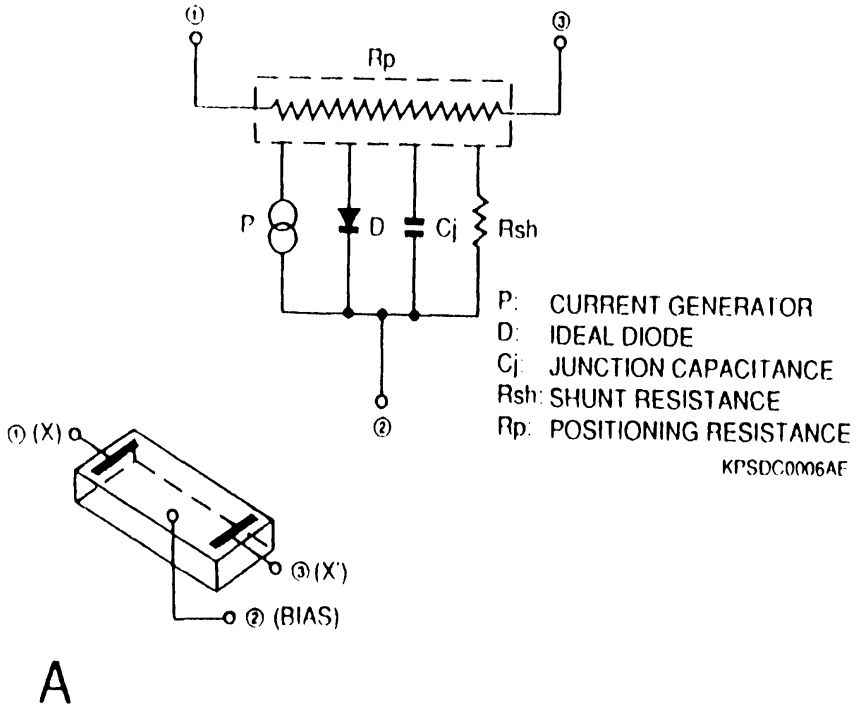

A

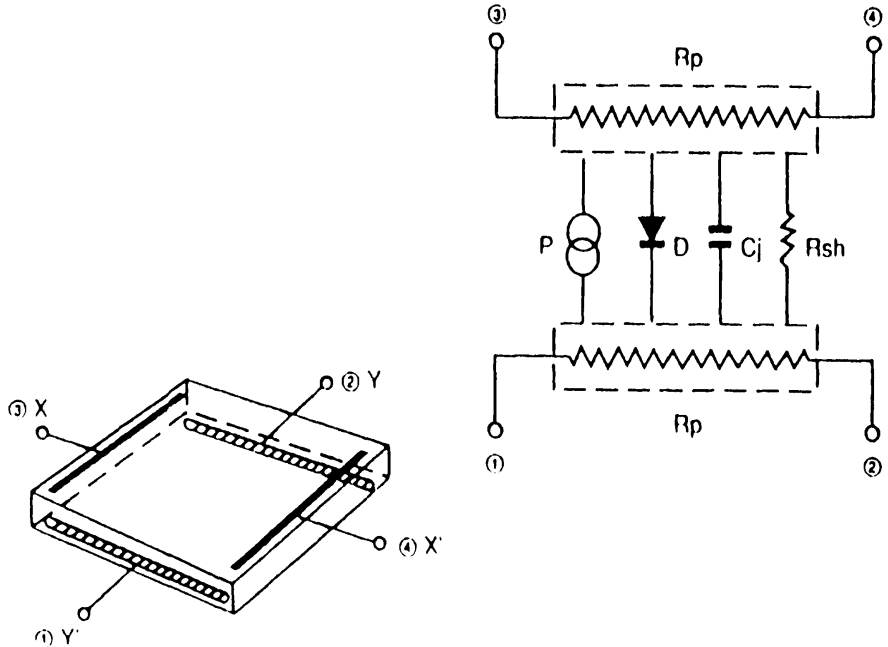

(6) Change of material property

Example: Strain gauge

Often K = 2

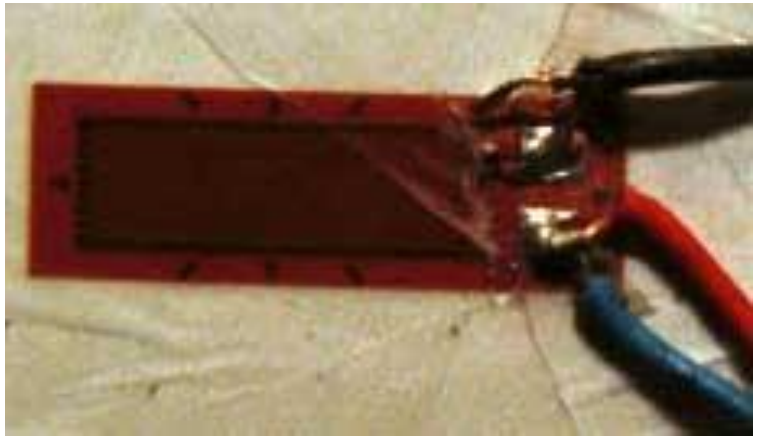

$$\frac{\Delta R}{R} = K \cdot \frac{\Delta L}{L}$$

$$\varepsilon = \frac{\Delta L}{L} = \frac{F}{E \cdot S} = \frac{\sigma}{E}$$

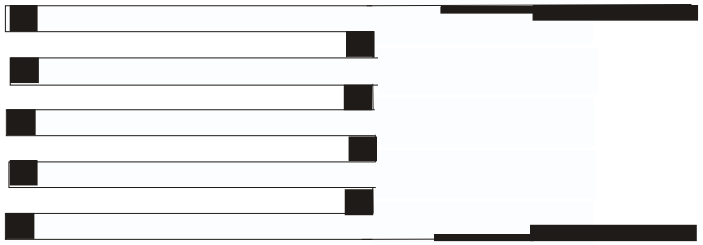

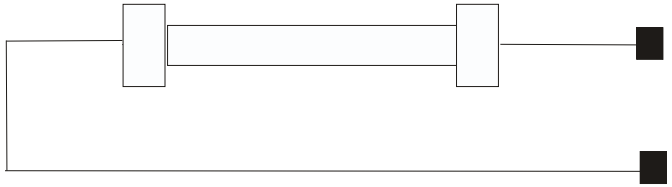

(7) Derived quantities

Example: Resonance frequency

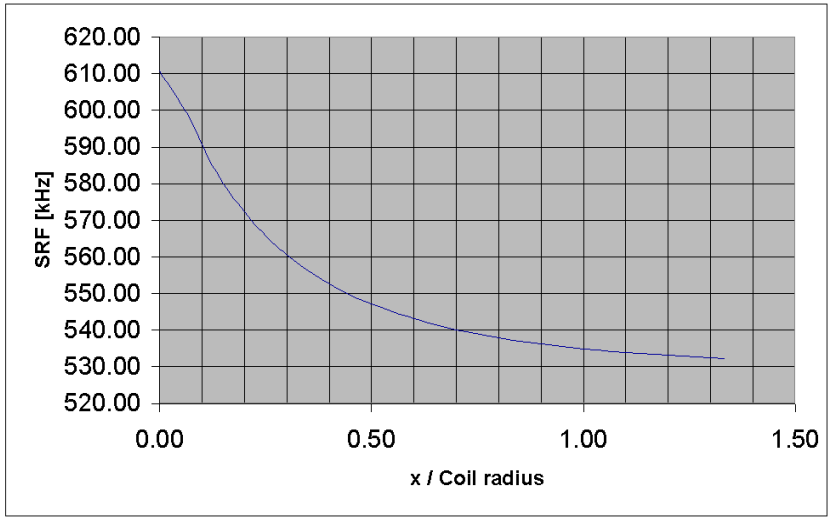

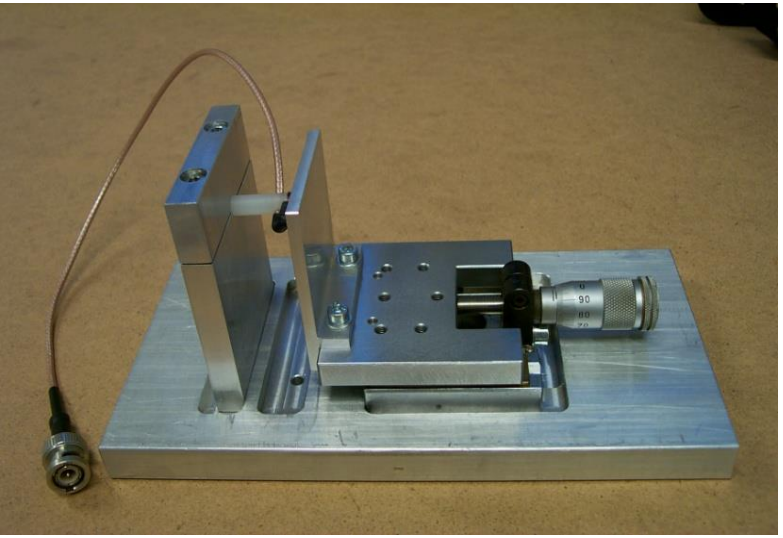

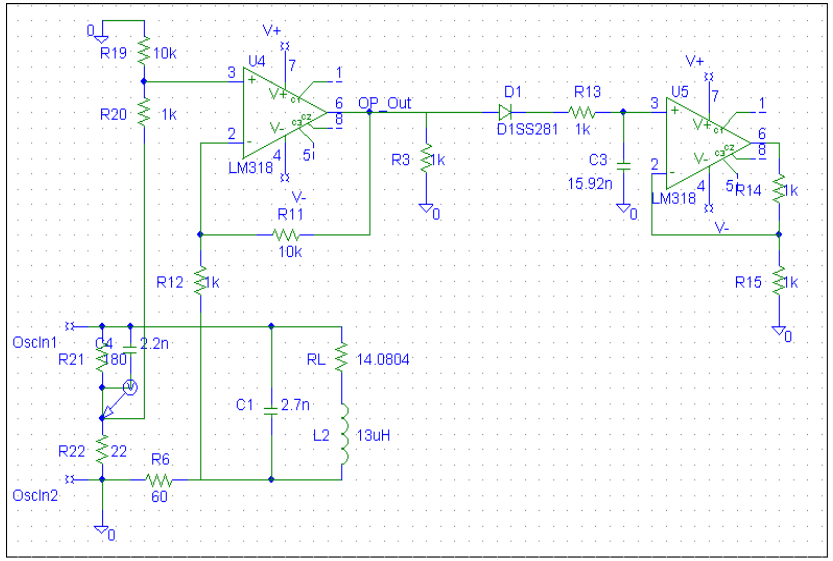

Forced oscillator

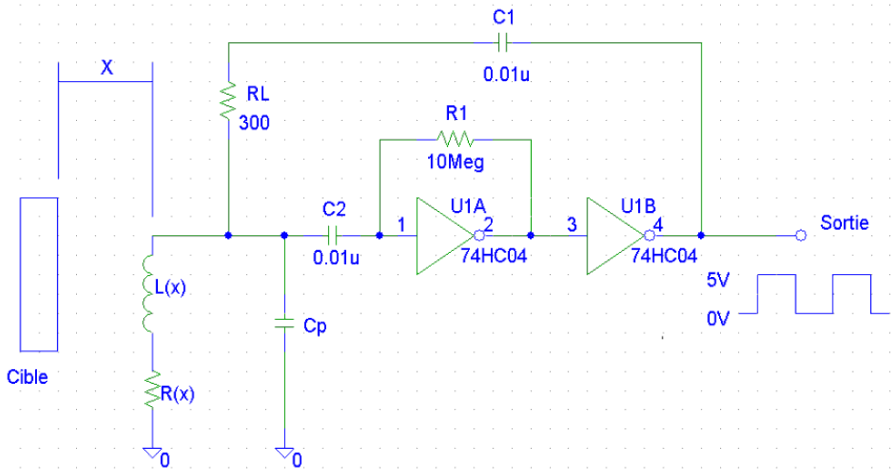

Free-running oscillator

(8) Compensation sensing

Example: LEM current sensor

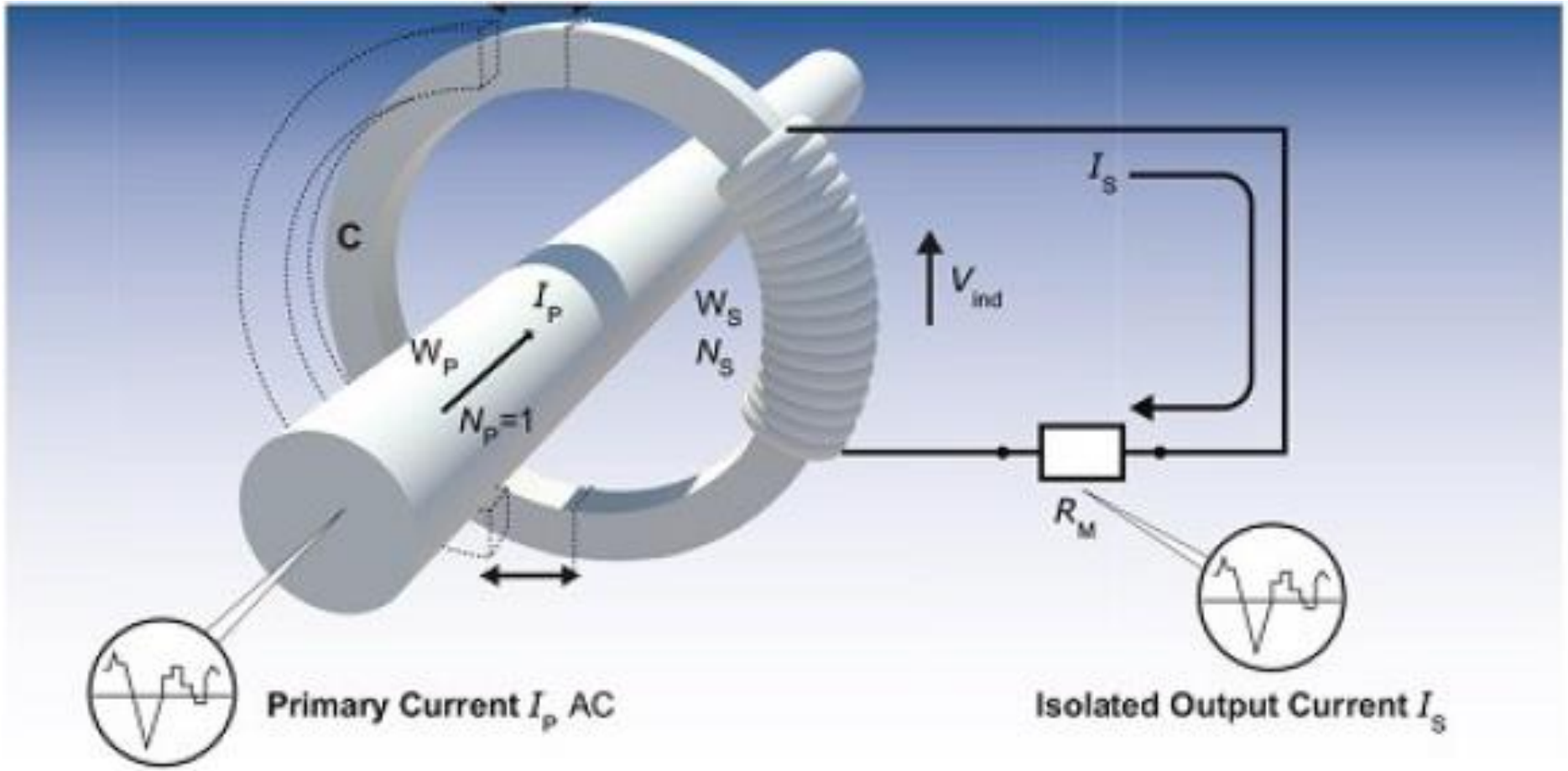

Direct Measurement Circuits

Static / low frequency measurement circuits

1 – Voltage excitation

2 – Current excitation

3 – Voltage measurement

4 – Current measurement

5 – DC Bridge measurement

6 – Charge measurement

7 – Current loop interface

8 – Noise analysis

9 – Autozero amplification

(1) Voltage excitation : Widlar bandgap reference

Reference ouput voltage is sum of two contributions with opposite temperature drifts → high stability

Resistance values define V_{ref}.

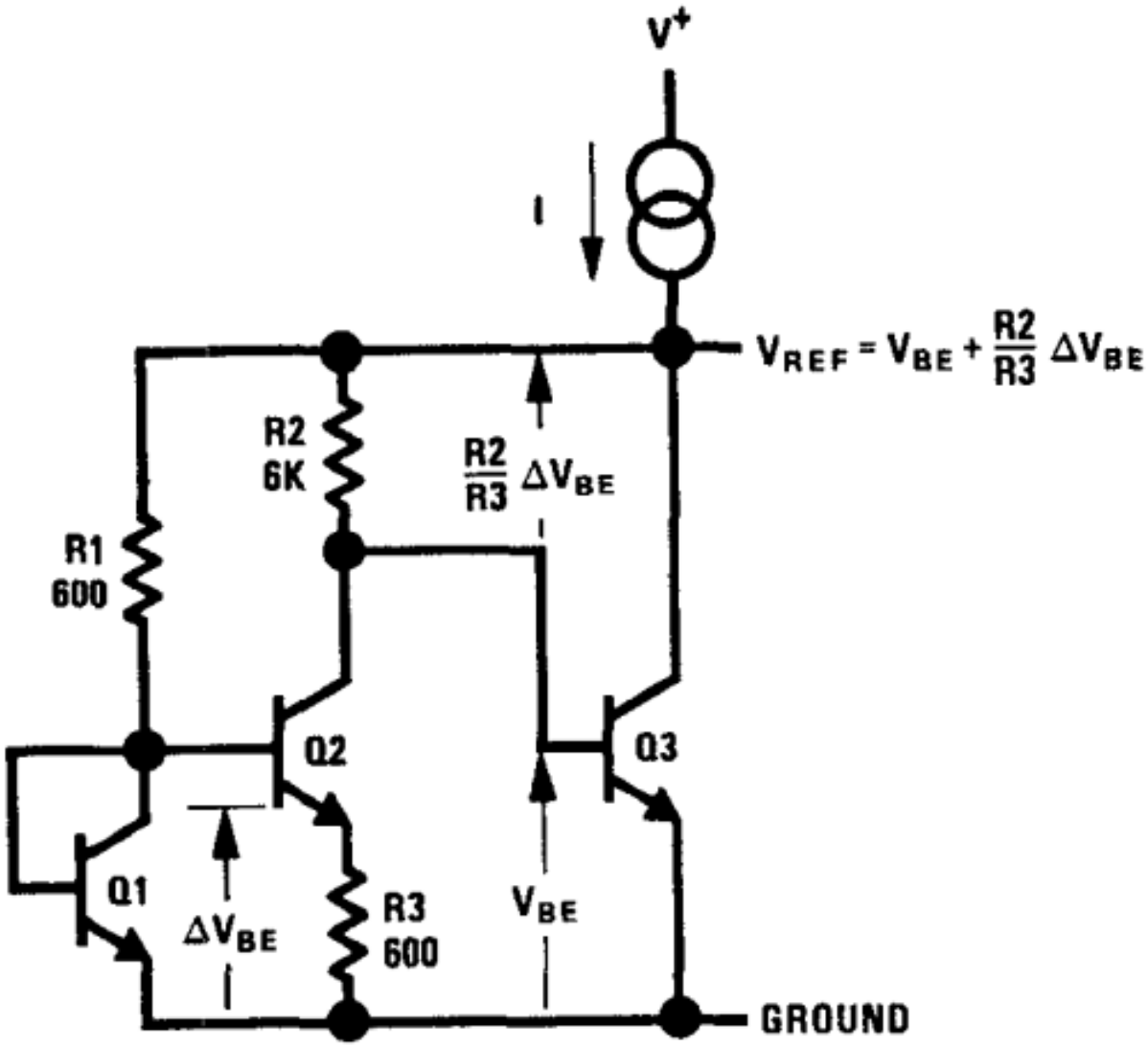

(1) Voltage excitation : Series or shunt reference

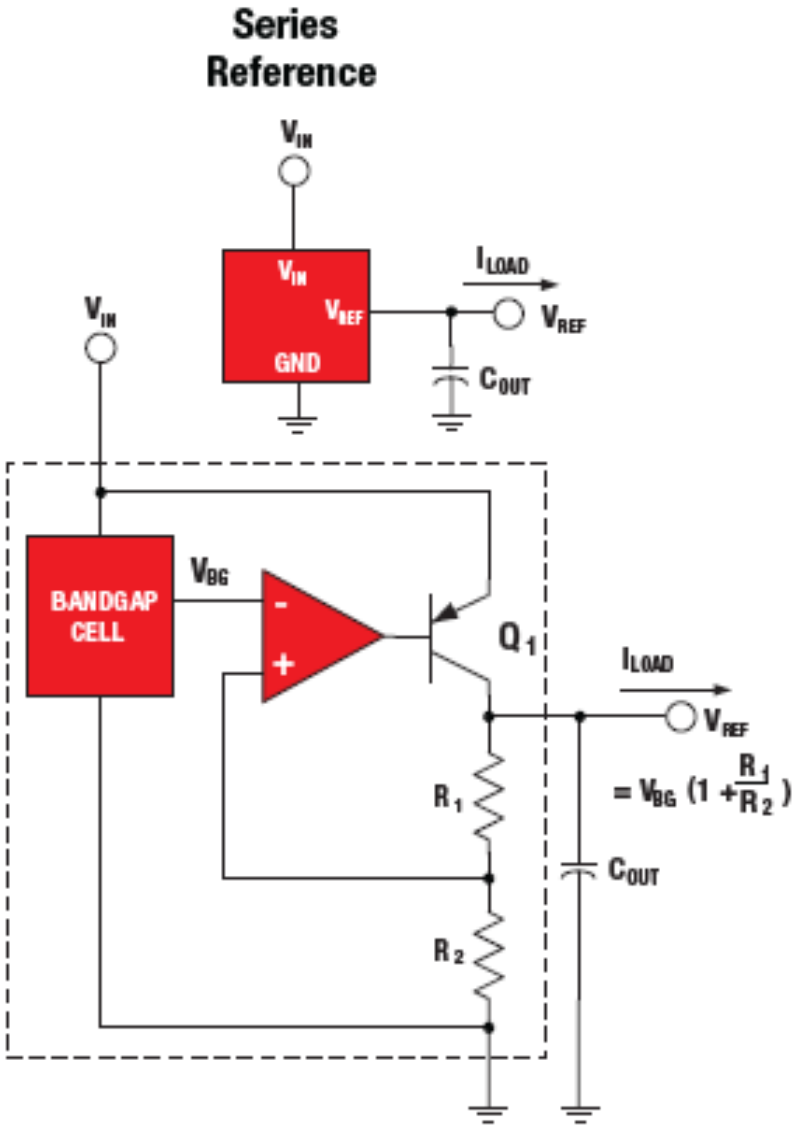

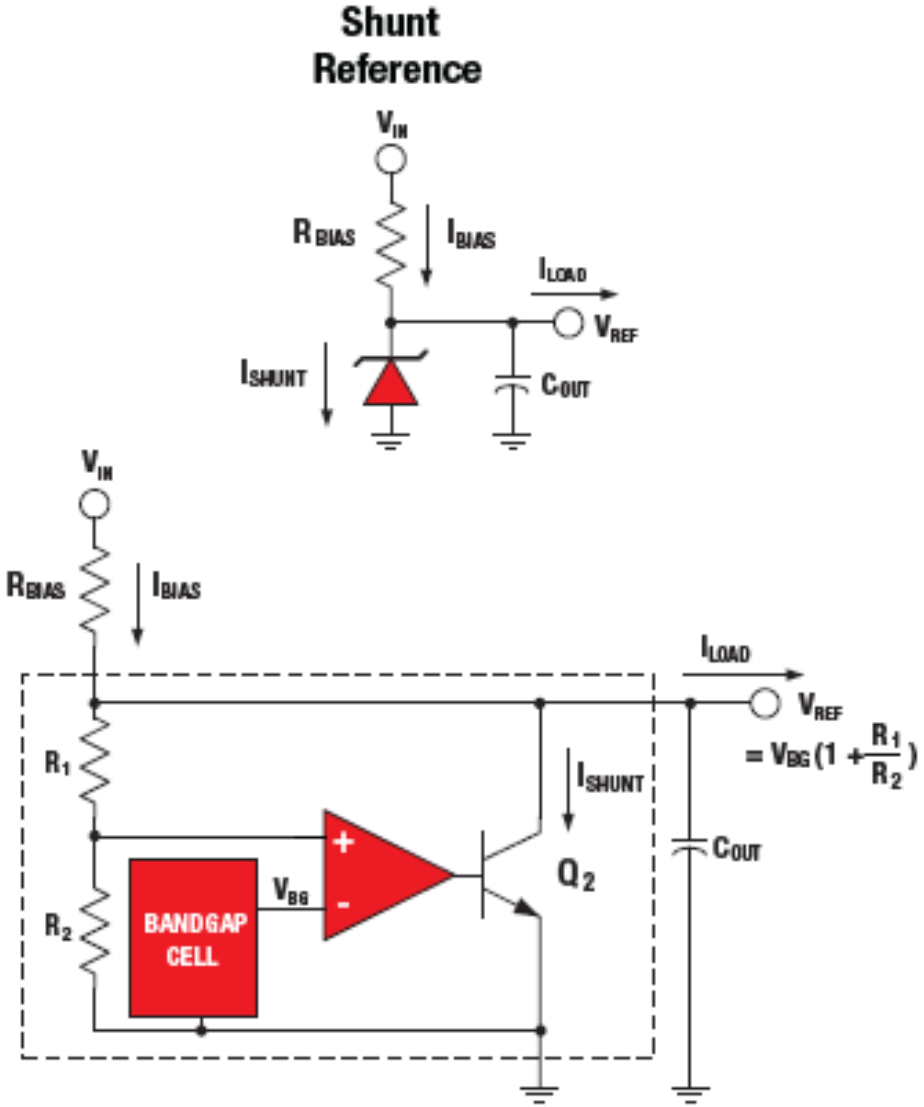

(1) Voltage excitation : Comparison of references

	Series References	Shunt References
Diagram	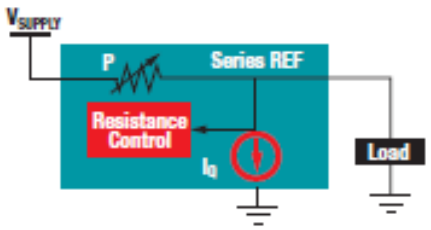	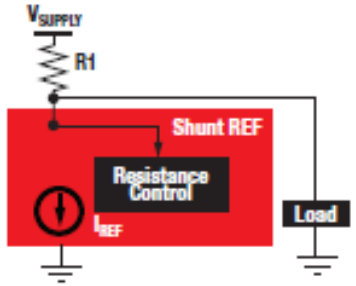
Number of Terminals	At least 3	At least 2
Advantages	• Significantly lower power dissipation • Generally higher precision • Low I_Q • Low dropout	• Wide V_{IN} tolerant with proper resistor selection • Can be used to create negative or floating reference voltage • Inherent current sourcing and sinking
Disadvantages	• Limited max V_{IN}	• V_{IN} current fixed at max load • No shutdown mode
Key Markets	• Factory automation, grid, medical, test	• Isolated power supplies, adapters, automotive

(1) Voltage excitation : Reference buffering

Problem: op-amp instability with capacitive load

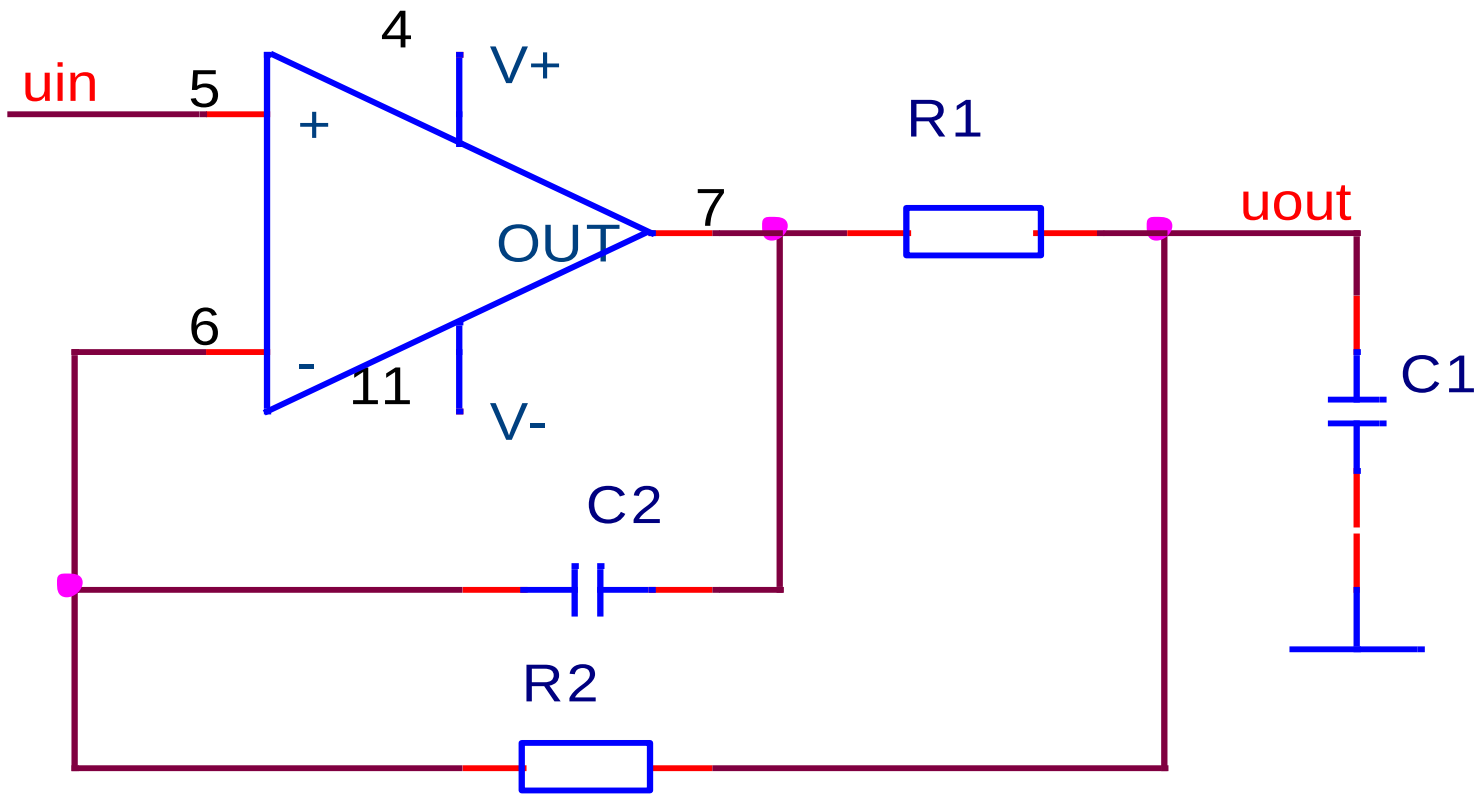

(2) Current excitation : Howland source

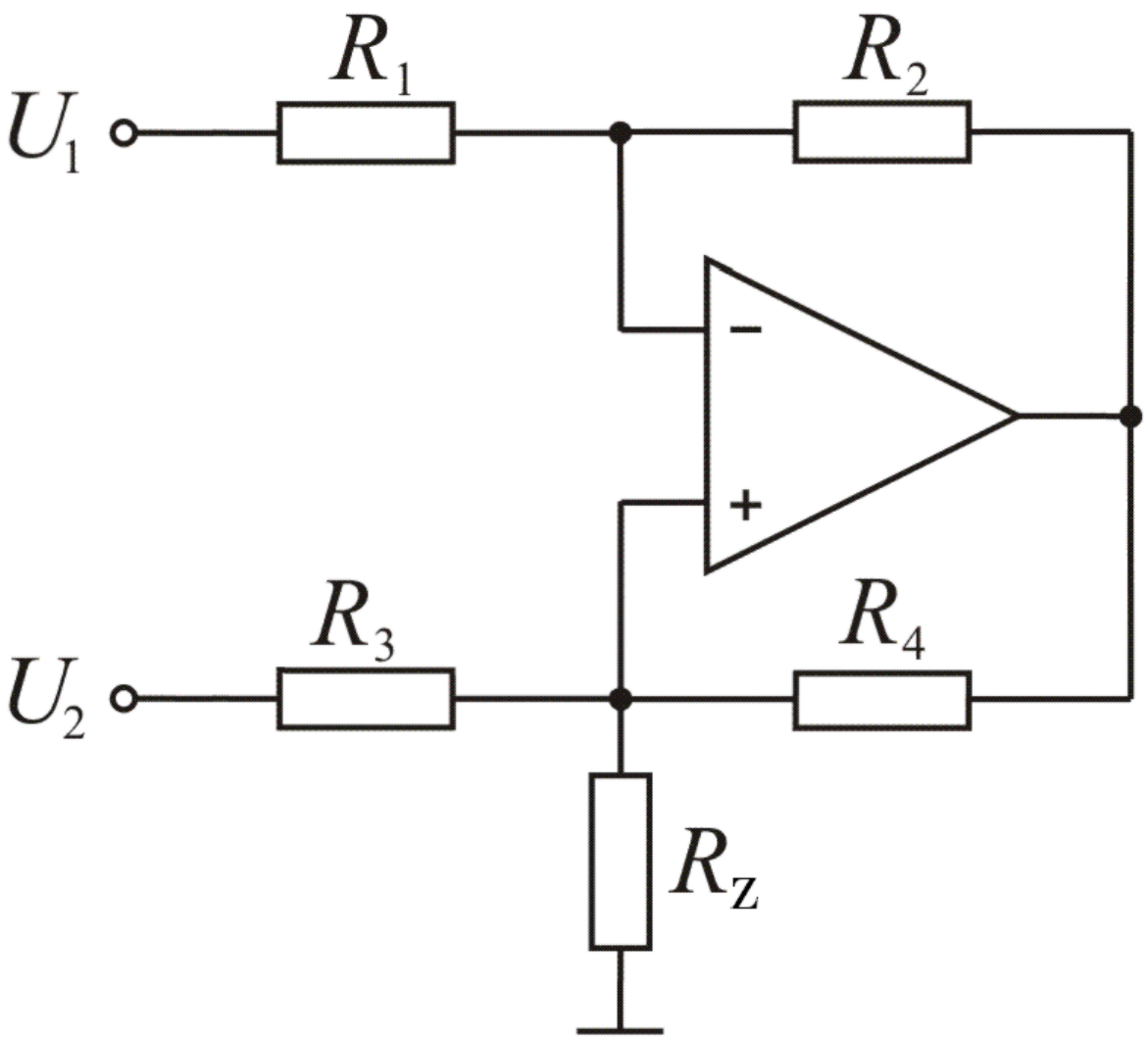

(2) Current excitation : Improved Howland source

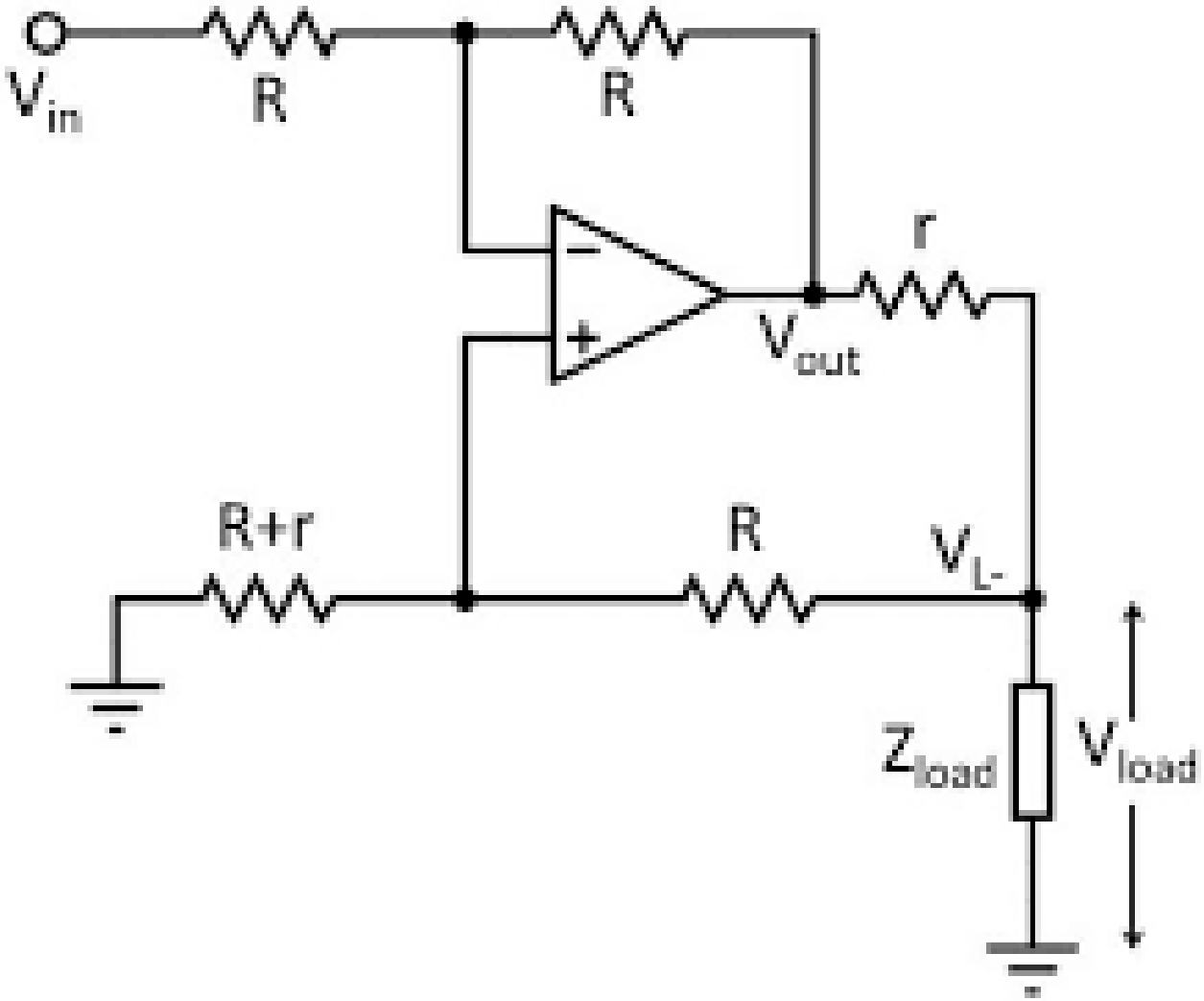

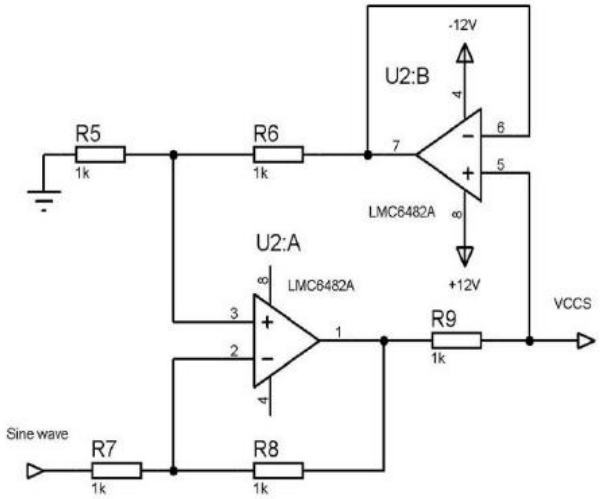

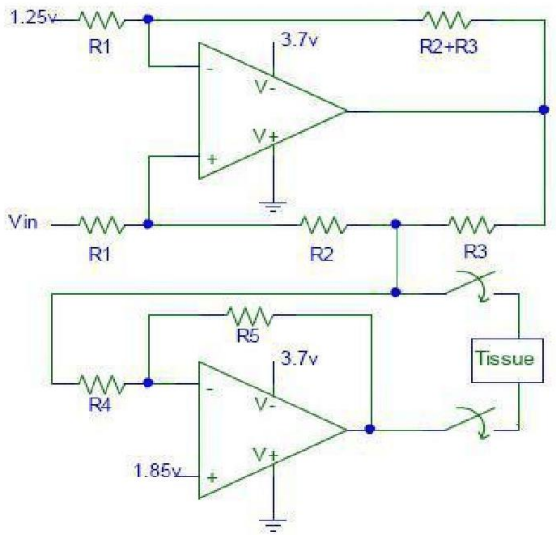

(3) Voltage measurement: Instrumentation amplifier

Optimized for common mode rejection

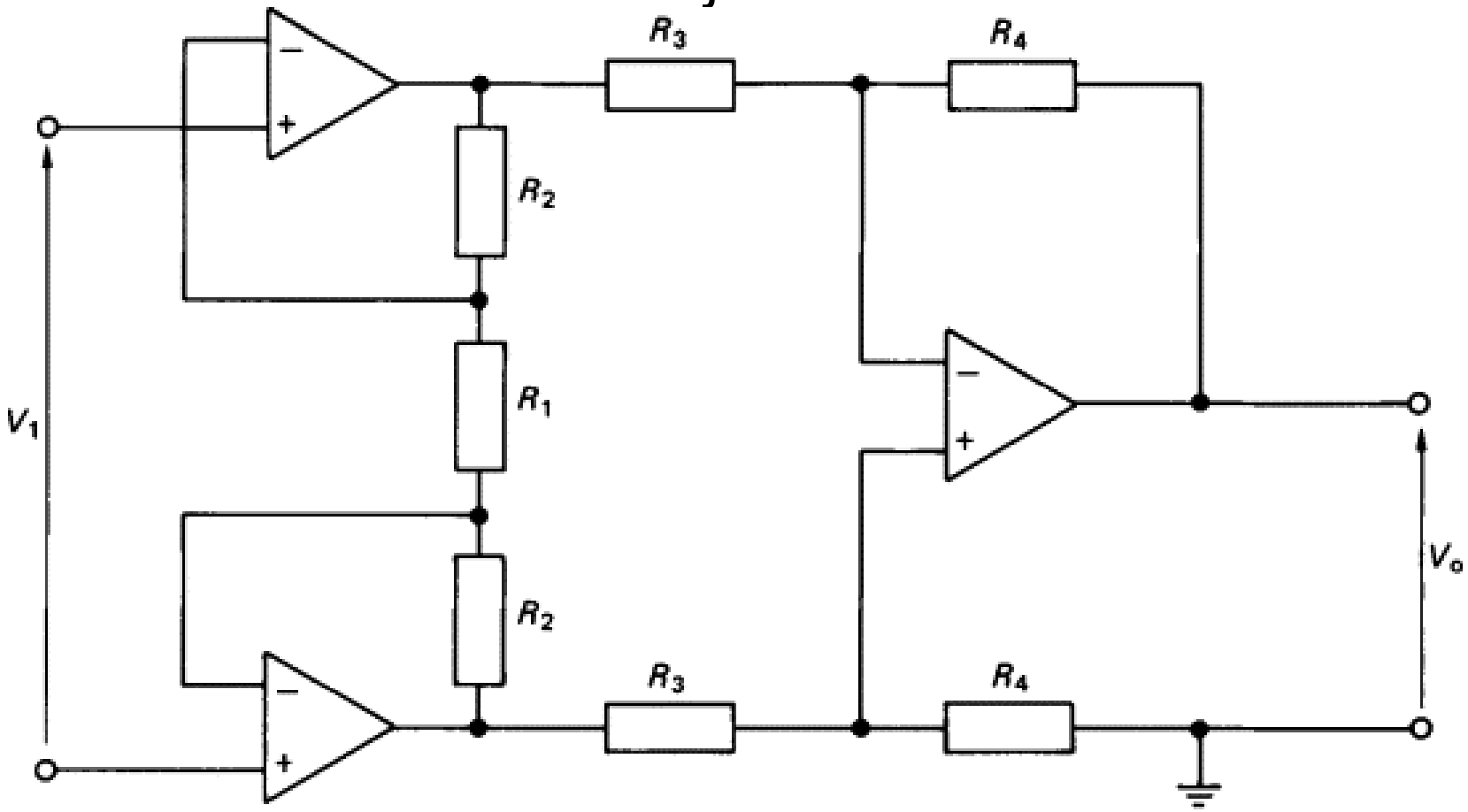

$$V_o = \frac{R_4}{R_3}\left[1 + \frac{2R_2}{R_1}\right]V_1$$

(3) Voltage measurement: Single supply operation

Use a reference voltage to define the zero potential of AC signals

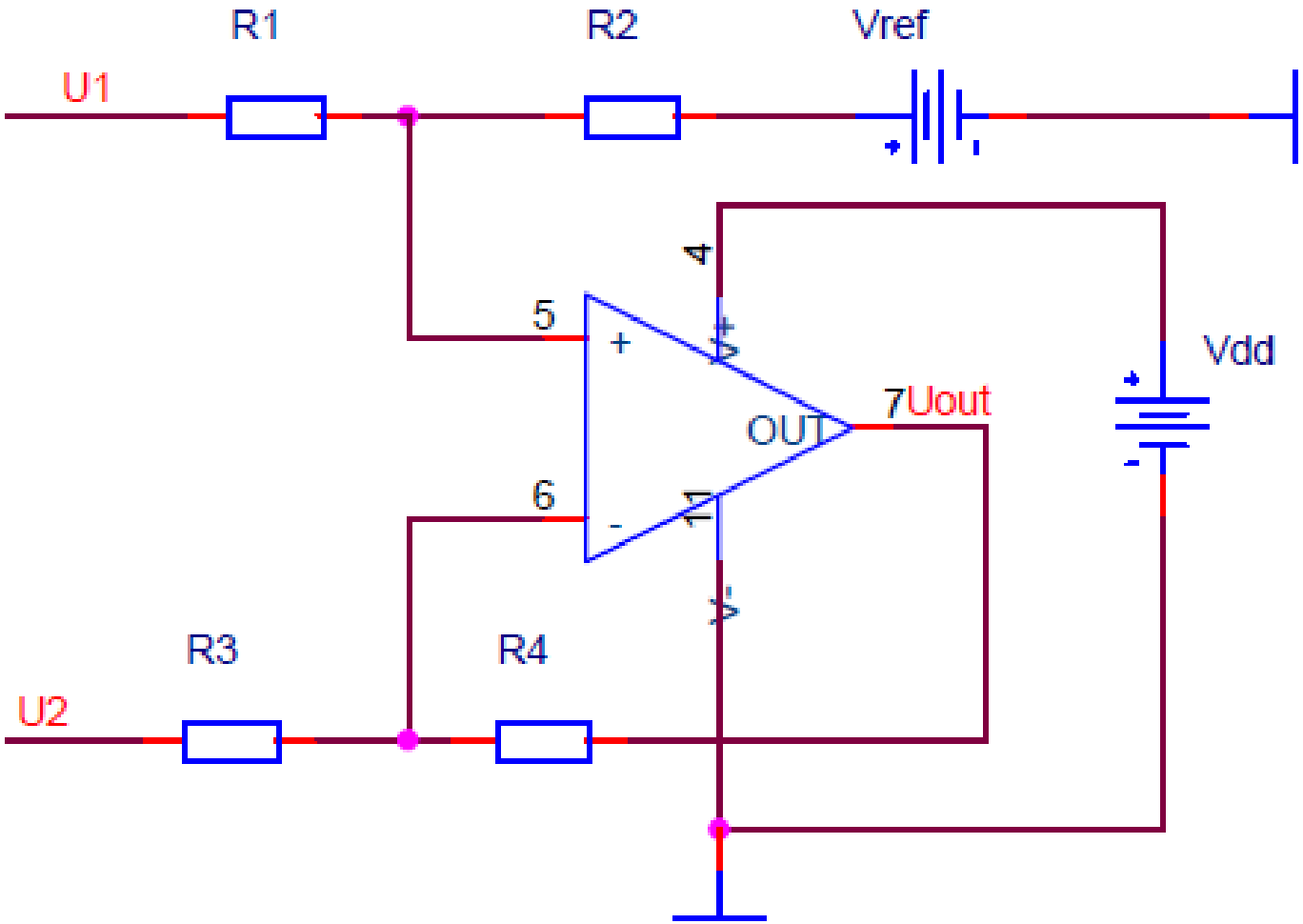

(4) Current measurement: Transimpedance amplifier

Current to voltage conversion if the input current flows towards ground.

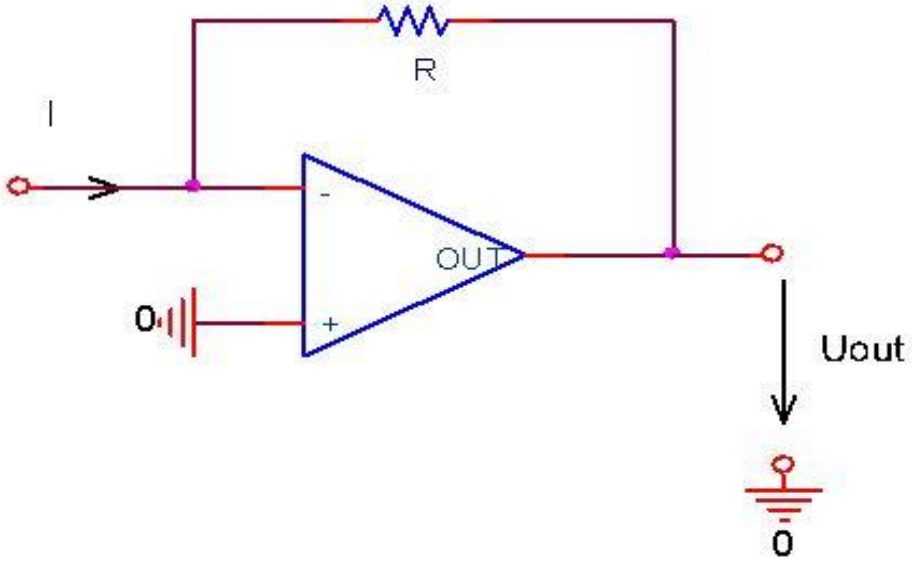

(4) Current measurement: Floating potential current

Circuit based of difference amplifier stages with common mode rejection

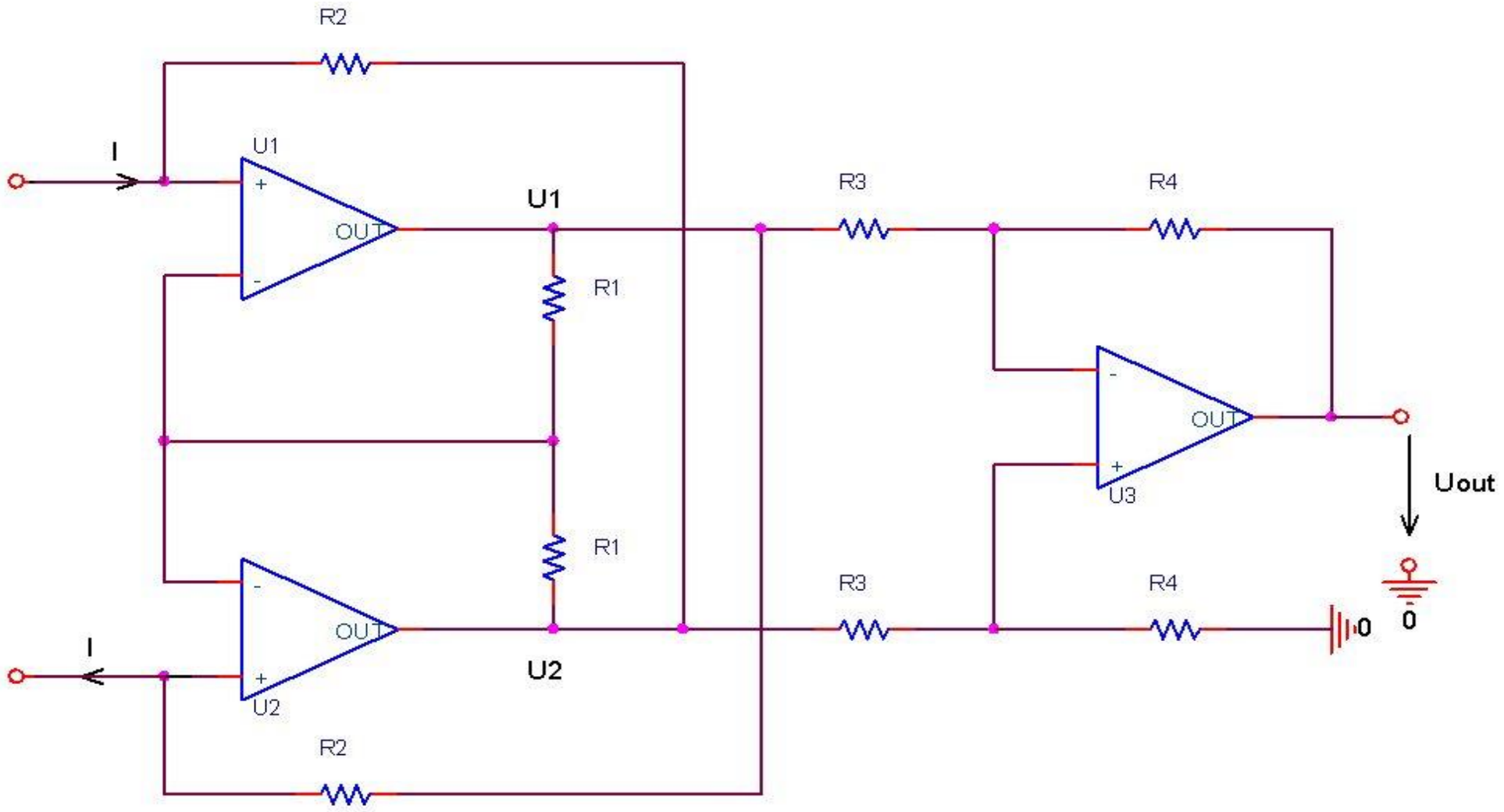

(5) DC bridge measurement

Separate gain and offset adjustments

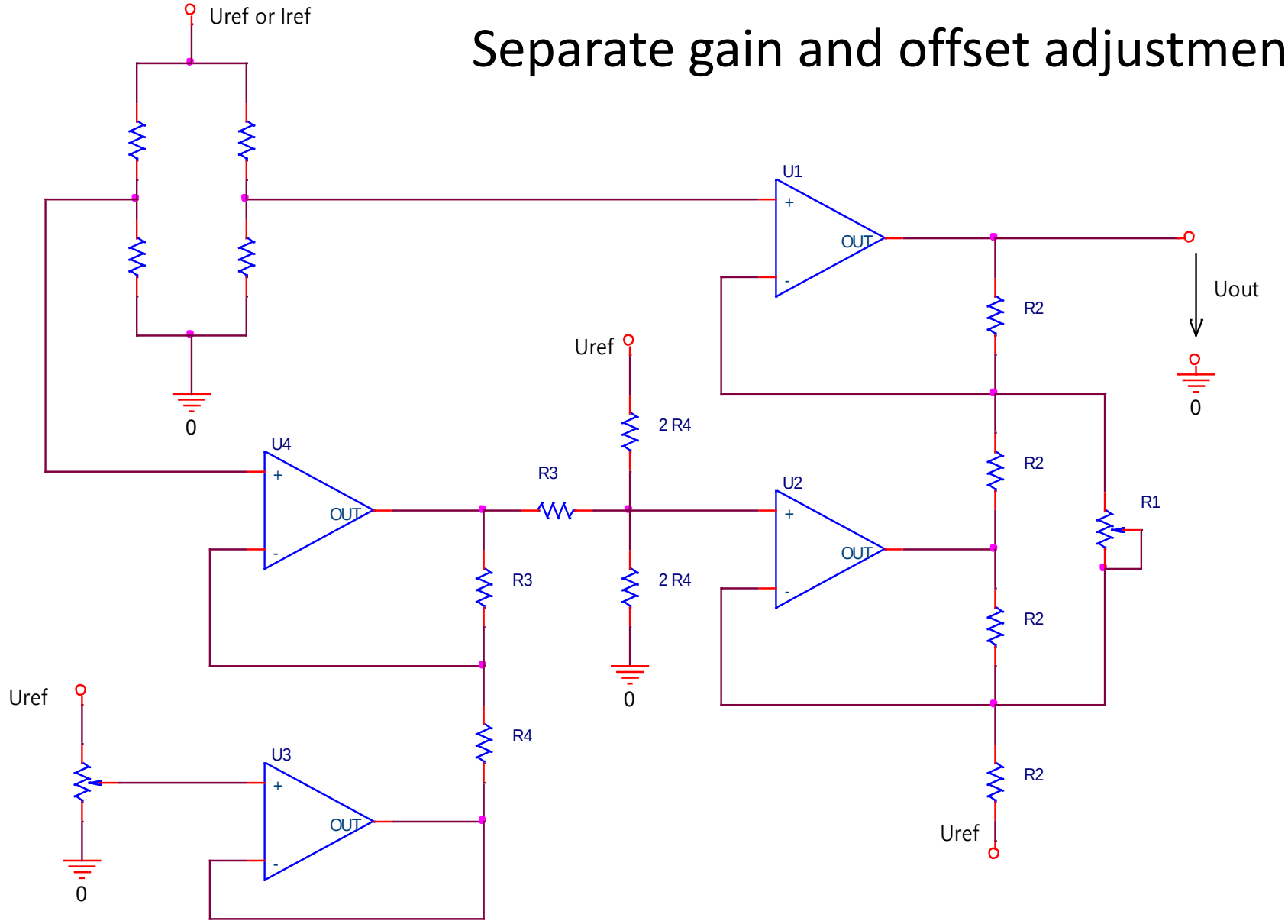

(5) DC bridge measurement: ratiometric operation

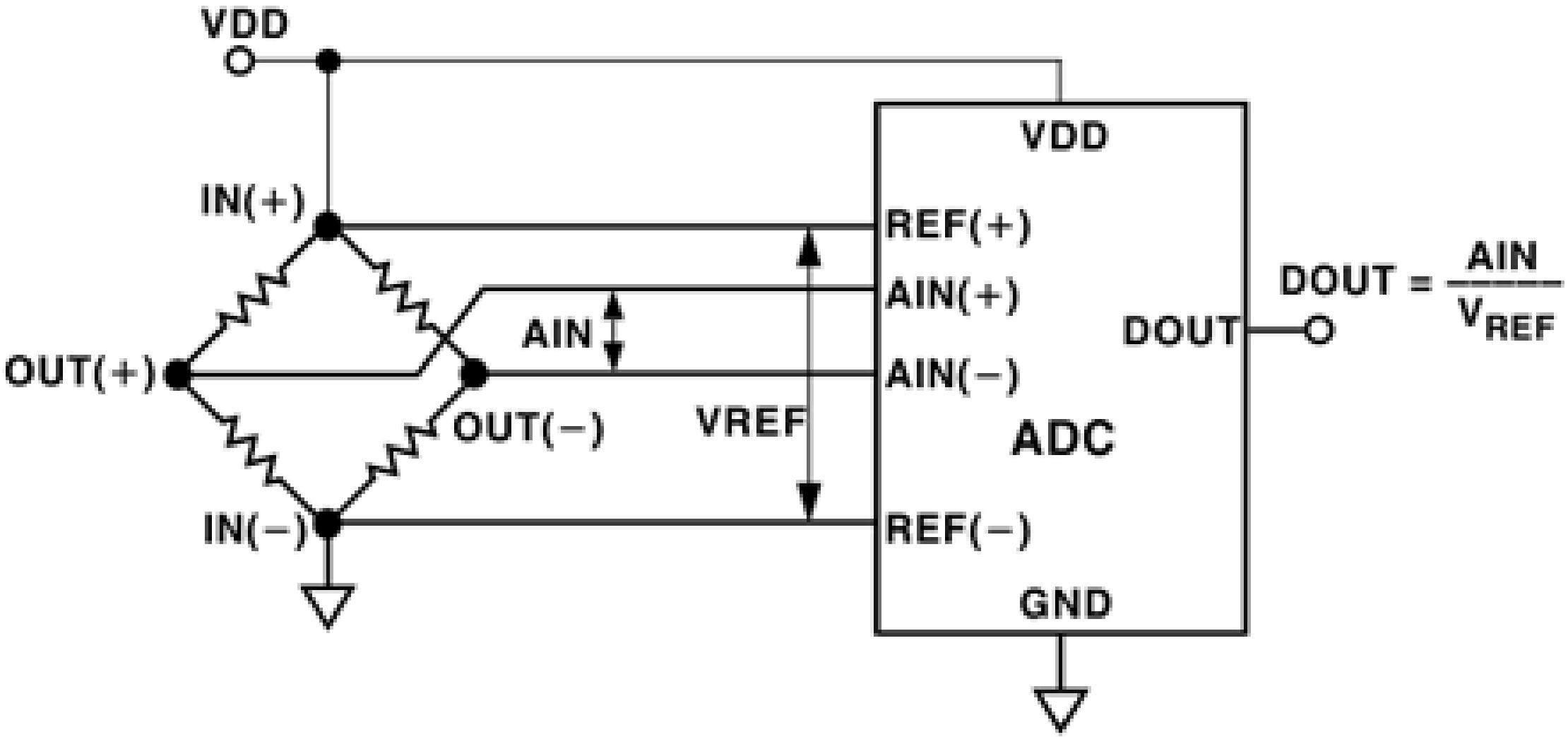

(5) DC bridge measurement: feedback circuit

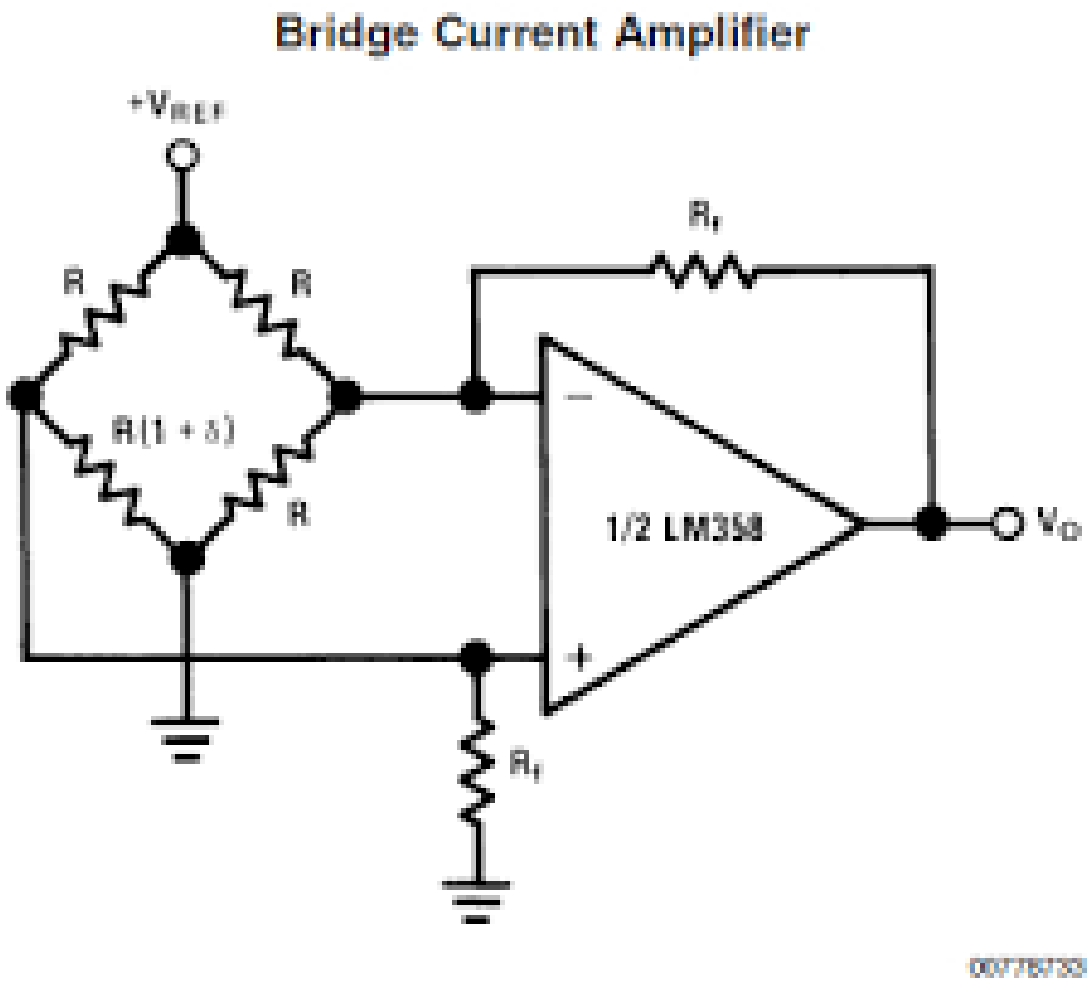

(5) Kelvin (Thomson) bridge

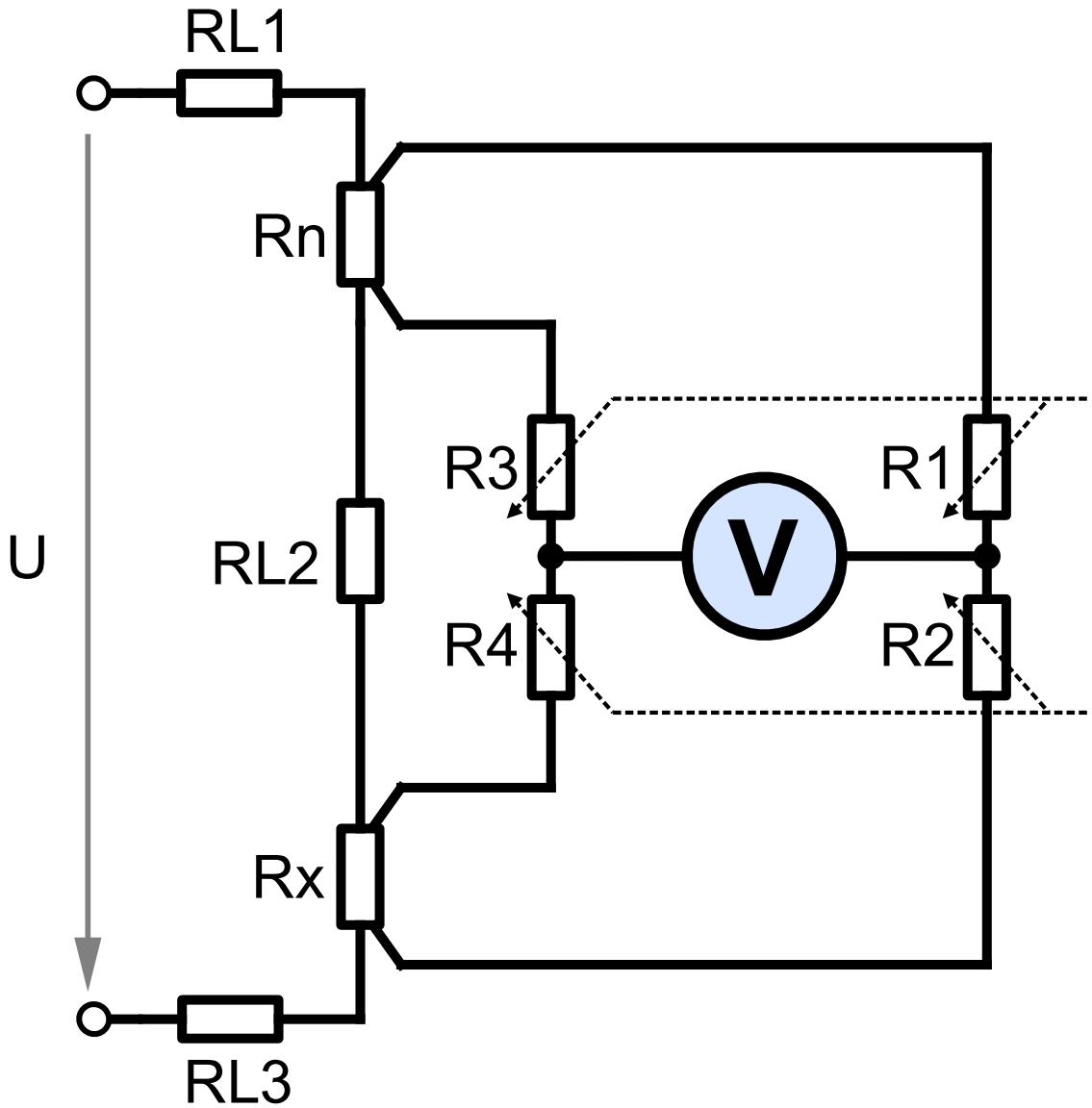

(5) Exercice

Develop the output equations of the different bridge circuits shown in the 4 preceding slides.

- Bridge with amplifier for separate gain and offset adjustments: Demonstrate the property.
- Bridge with feedback amplifier: Calculate $V_o = f(\delta)$
- Kelvin bridge: Find the condition for nulling the bridge

(6) Charge measurement

Charge is integrated and then converted to a voltage

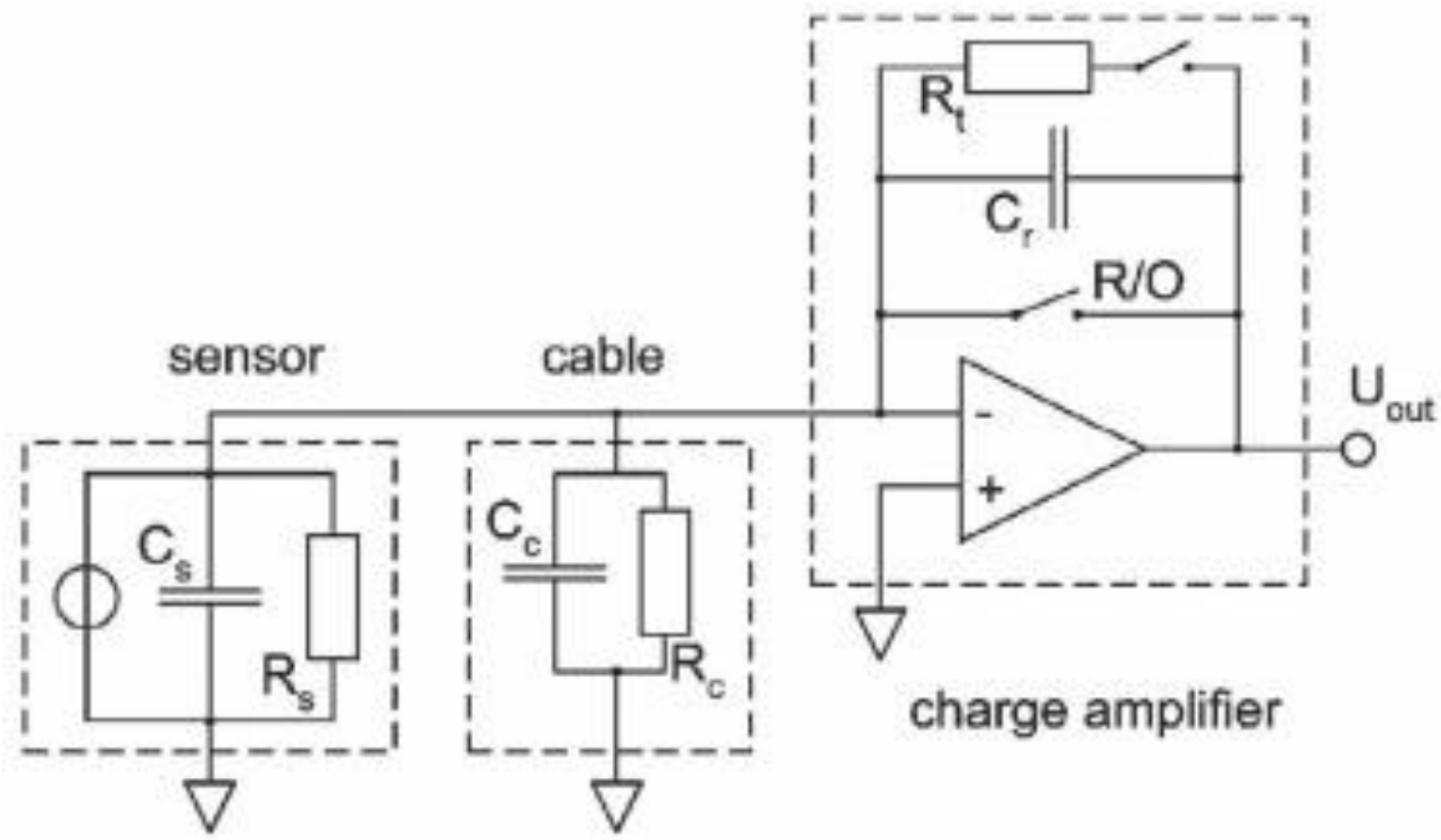

(6) Charge measurement: ICP (IEPE) circuit

Local charge to voltage conversion at sensor

IEPE = Integrated Electronics Piezo Electric

I_{const} = 4mA, U_{supply} > 18V, C_{couple} = 1…10µF

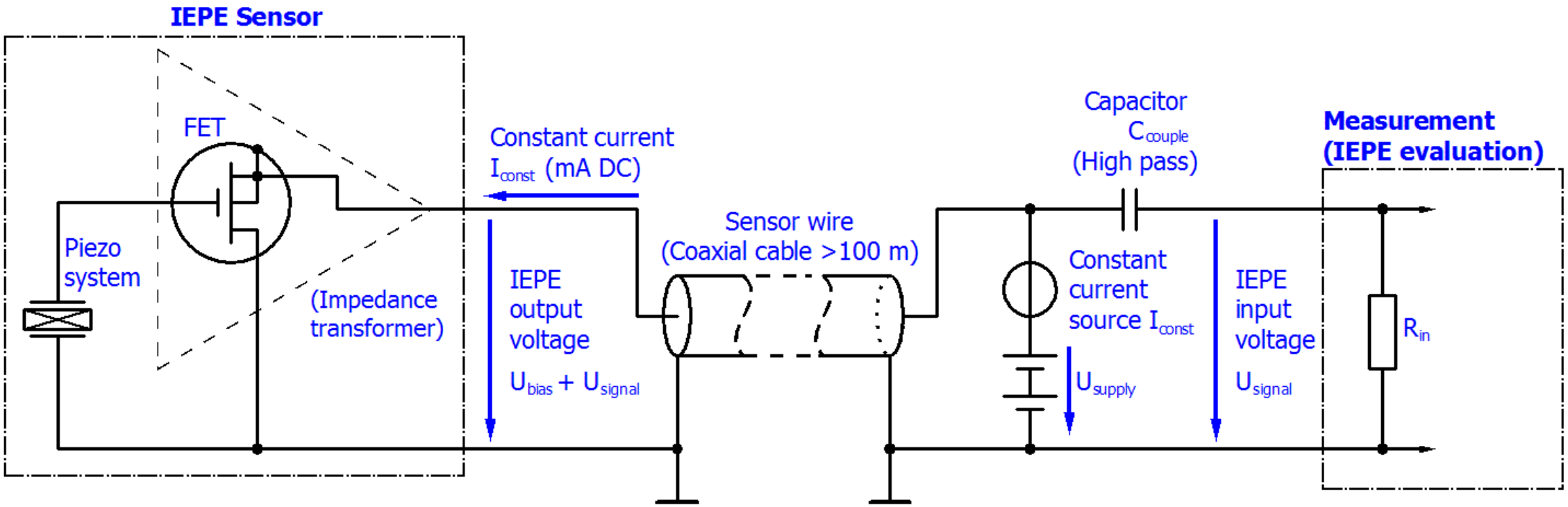

(7) Current loop interface

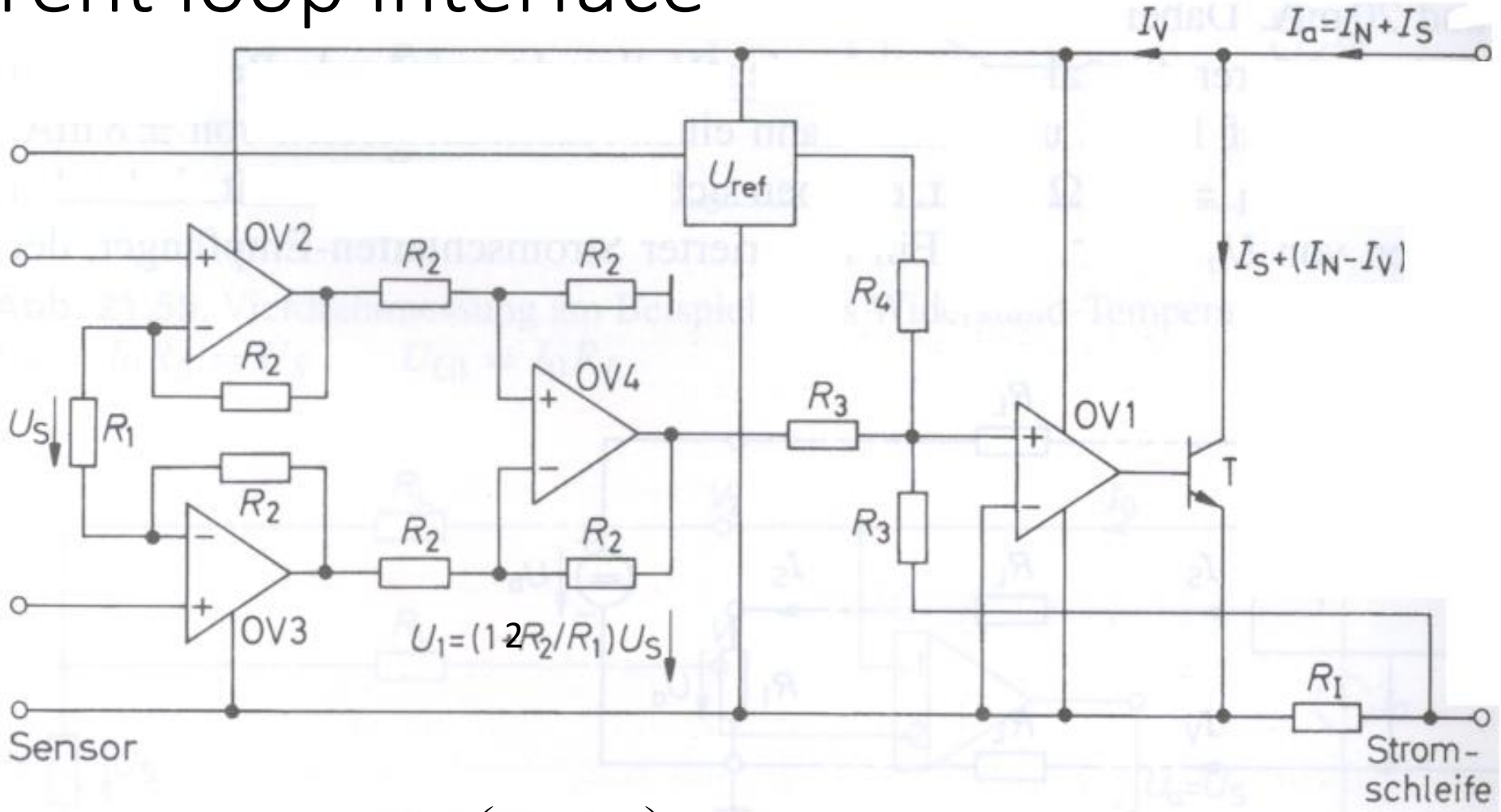

$$I_a = I_N + I_S = \frac{R_3}{R_4} \cdot \frac{U_{ref}}{R_I} + \left(1 + 2\frac{R_2}{R_1}\right) \cdot \frac{U_S}{R_I}$$

(8) Noise analysis

Noise signals

- Are random signals: aperiodic, instantaneous values can never be predicted.
- Can be generated internally in active circuits, e.g. operational amplifiers, in passive components or be injected into a circuit from external sources.
- The signal-to-noise ratio is

$$\frac{S_{(f)}}{N_{(f)}} = \frac{\text{rms signal voltage}}{\text{rms noise voltage}}$$

Noise statistics

- Noise signals can be characterized by histograms (e.g. Gauss curve) or power density spectra (e.g. uniform).

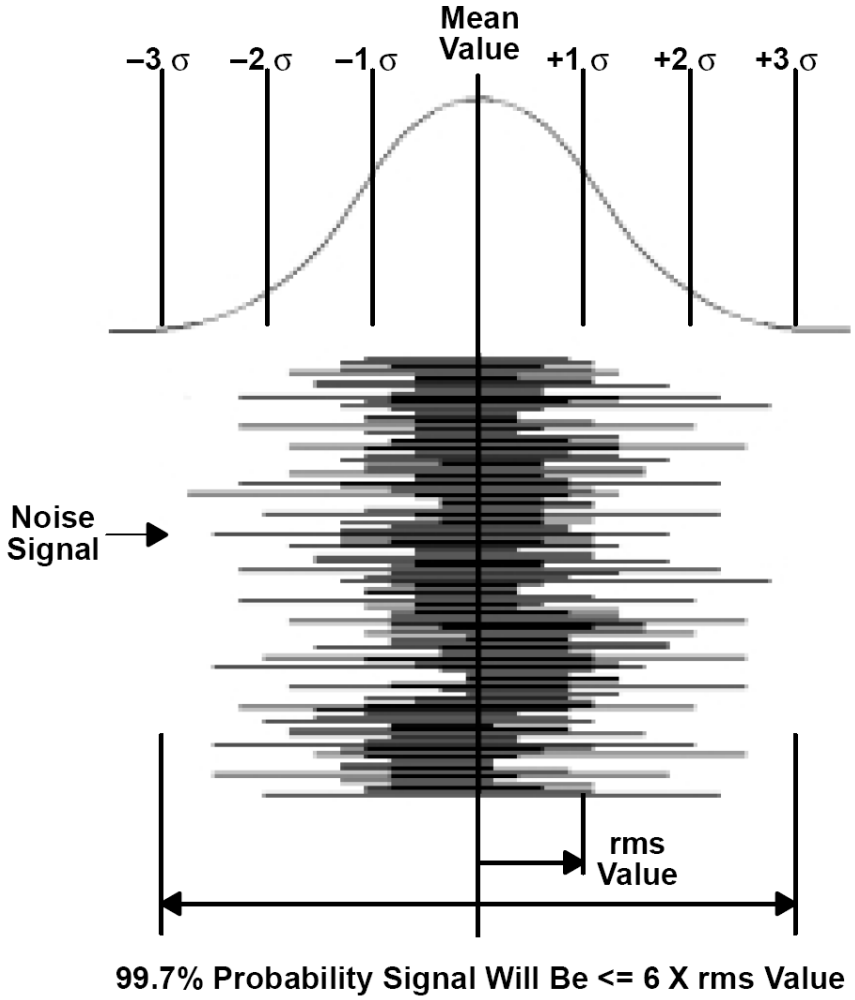

Geometric addition of multiple sources of noise

Independent random signals: rms values do not add linearly but geometrically

$$E_{Totalrms} = \sqrt{e_{1rms}^2 + e_{2rms}^2 + \ldots e_{nrms}^2}$$

Units of spectral density of noise

$$\frac{V_{rms}}{\sqrt{Hz}} \quad or \quad \frac{A_{rms}}{\sqrt{Hz}}$$

Derived from power spectral density in [V^2/Hz] or [A^2/Hz], referred to a reference resistor (1Ω by default).

Corner frequency in operational amplifier noise

Here is an example of an input referred voltage noise spectrum:

It can be roughly decomposed in a uniform part above f_{nc}, and a part increasing with 1/rt*f*, below f_{nc}.

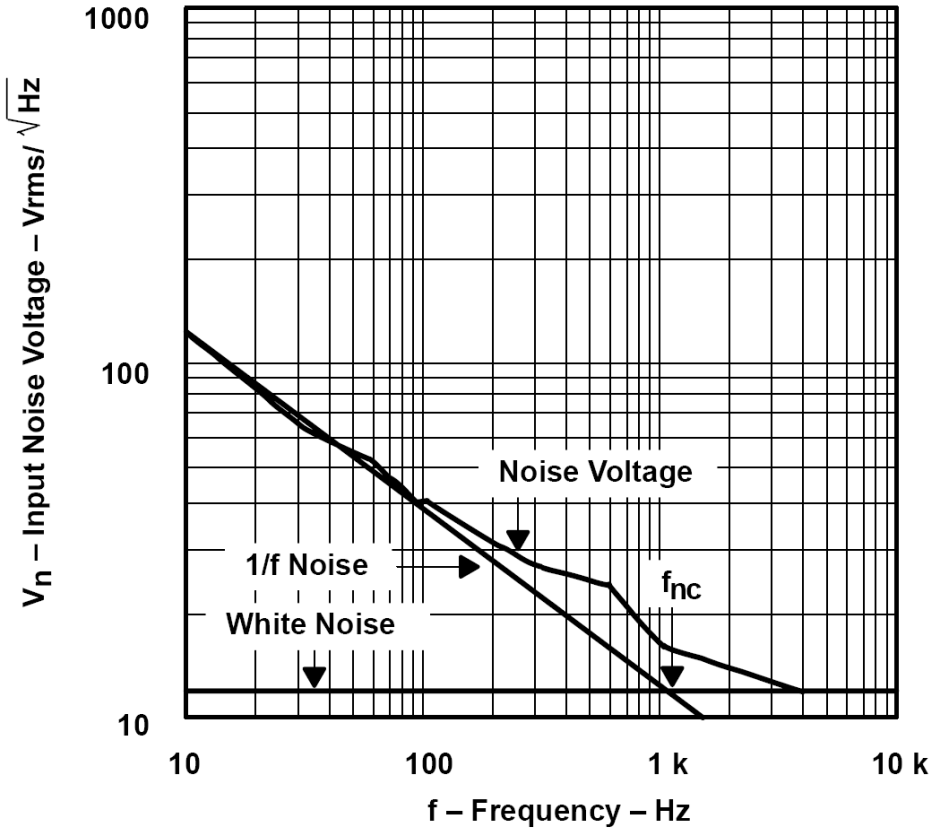

Noise corner frequency

If datasheet curves are not in logarithmic scale or corner is not pronounced, determine f_{nc}

Example

For the TLV2772, the figure shows a noise density of $130\frac{\text{nV}}{\sqrt{\text{Hz}}}$ at 10Hz.

The datasheet of the TLV2772 shows a white noise density of $12\frac{\text{nV}}{\sqrt{\text{Hz}}}$.

On the 1/f noise power curve the product frequency x noise power density is constant:

$$\left[\left(\frac{130\text{nV}}{\sqrt{\text{Hz}}}\right)^2-\left(\frac{12\text{nV}}{\sqrt{\text{Hz}}}\right)^2\right]\cdot 10\text{Hz}=167560(\text{nV})^2$$

At f_{nc}, the 1/f noise power density is 12nV/rtHz:

$$\frac{167560(\text{nV})^2}{\left(\frac{12\text{nV}}{\sqrt{\text{Hz}}}\right)^2}=1164\text{Hz}$$

Total bandwidth limited noise

Determine the total noise within a given bandwidth, e.g. 10Hz…10kHz

Method: Noise voltage is root of noise power. First integrate power, then determine voltage.

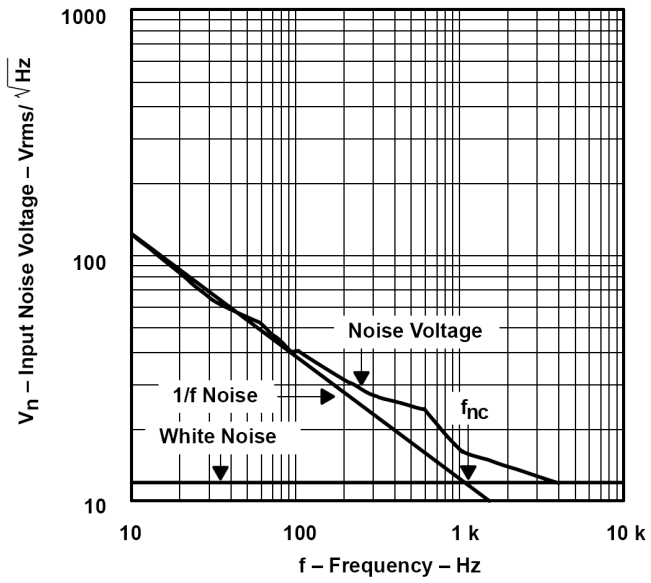

$$E_n = E_{whitenoise} \cdot \sqrt{f_{nc} \cdot \ln\left(\frac{f_{max}}{f_{min}}\right) + (f_{max} - f_{min})}$$

$$E_n = \frac{12nV}{\sqrt{Hz}} \cdot \sqrt{1164Hz \cdot \ln\left(\frac{10^4 Hz}{10Hz}\right) + (10^4 Hz - 10Hz)} = 1.61\mu V = -116dBV$$

Operational amplifier input referred noise

Noise sources are added to ideal operational amplifier like bias and offset sources at the inputs.

The effect on the output is computed in analogy to that of bias and offset sources, using superposition.

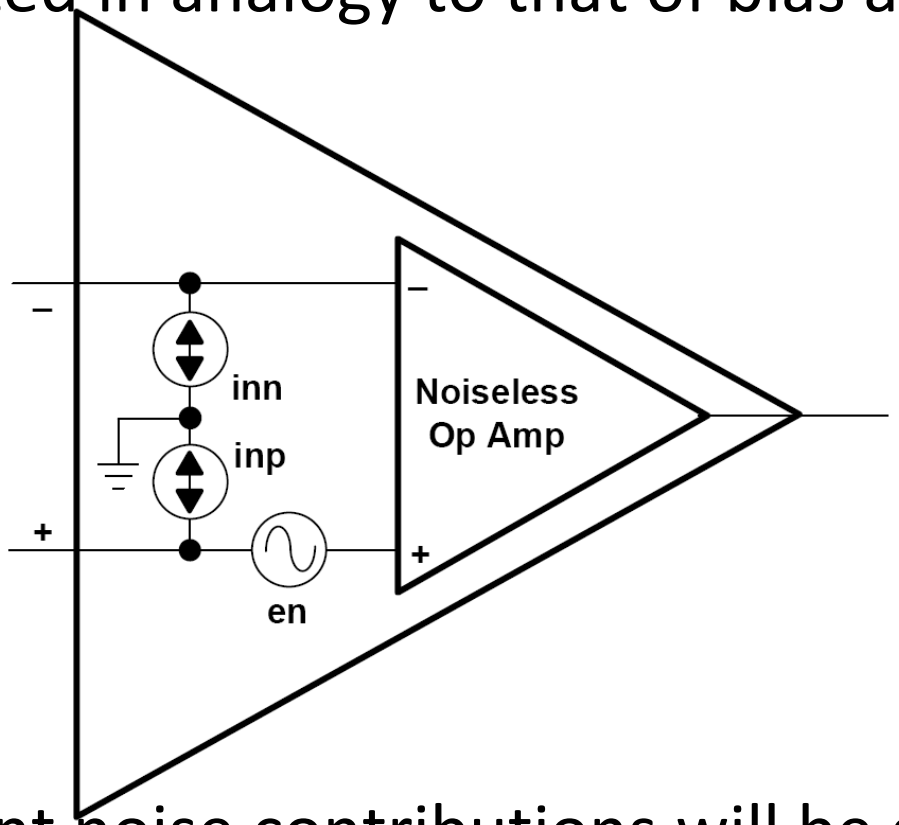

Attention: Superposition of different noise contributions will be geometric.

Exercice : Noise performance data of OP37

Search for noise performance data in the OP37 datasheet.

Determine the corner frequencies of voltage and current noise. At which input resistance will voltage and current white noise levels generate equivalent contributions at the output ?

How high will the output noise then be ?

What will the noise corner frequency in this case become ?

Noise sources in a non-inverting amplifier

741 class example:

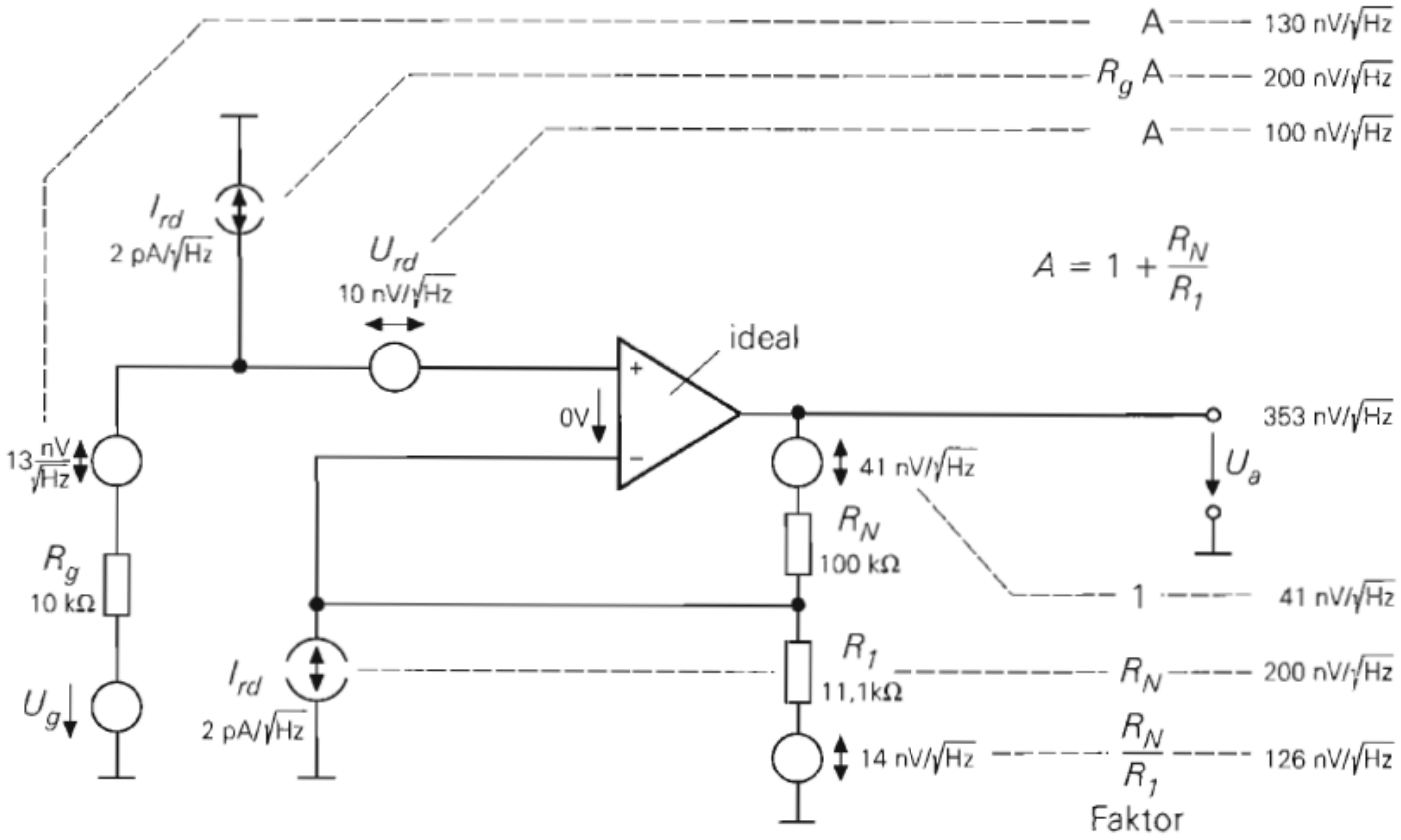

Resistor noise: $U_R = \sqrt{4kTR(f_{max} - f_{min})}$ k = $1.38 \cdot 10^{-23}$ J/K Boltzmann constant

Noise voltage and noise number

$$F = \left(\frac{\text{Noise voltage at real amplifier output}}{\text{Noise voltage at ideal amplifier output}} \right)^2$$

Function of source resistance:

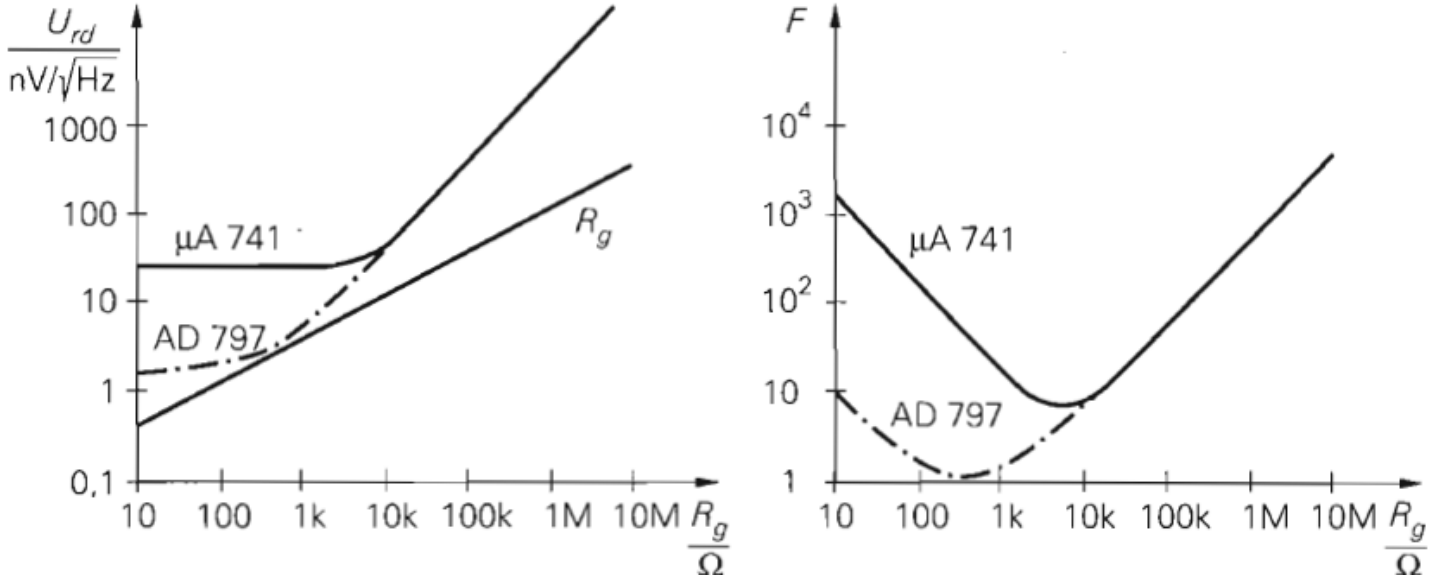

At low R_g, amplifier input referred voltage noise dominates, at high R_g current noise.

Voltage and current noise performances

CMOS circuits tend to have less current but more voltage noise.

CMOS circuits also tend to have higher noise corner frequencies.

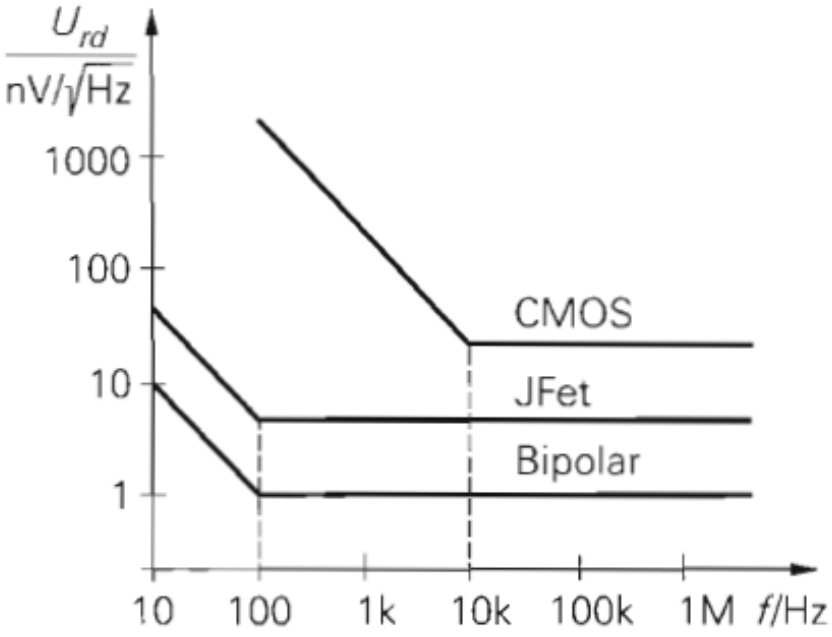

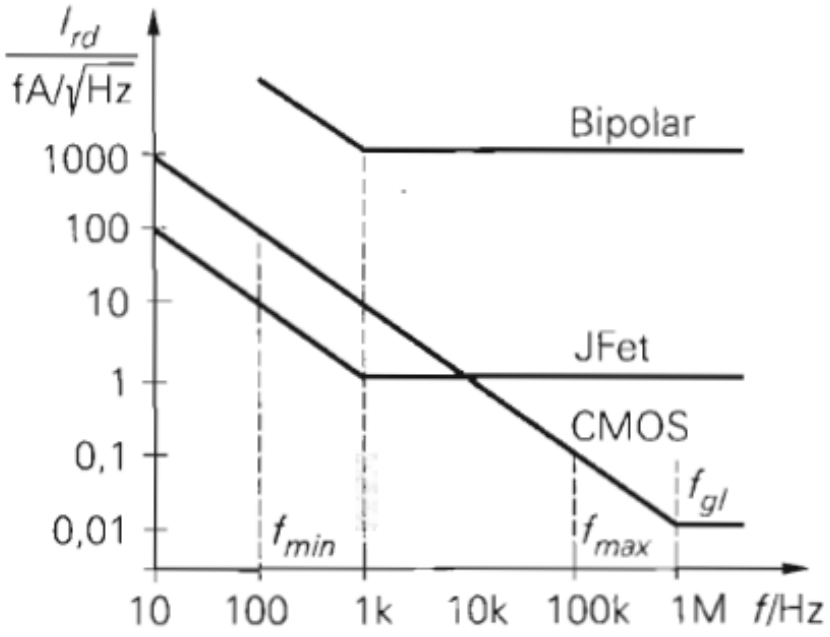

Recall: n(ano) = 10^{-9}, p(ico) = 10^{-12}, f(emto) = 10^{-15}, a(to) = 10^{-18}.

(9) Auto-zero amplifier

Cancel low frequency noise density increase by auto-measurement of the offset = low frequency noise.

Then subtract measured offset from input.

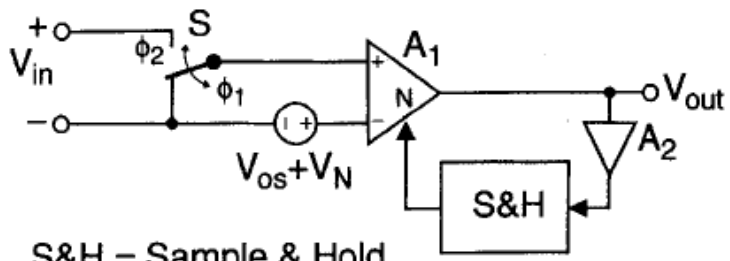

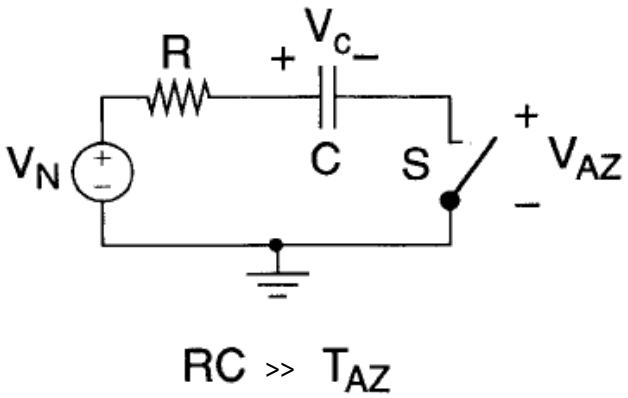

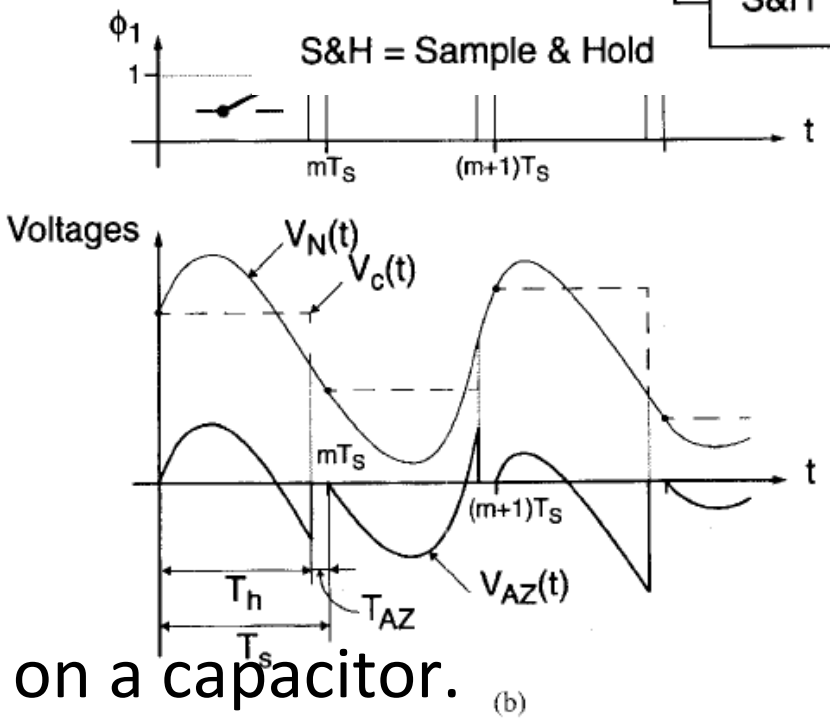

(a) (b)

(a) Basic AZ circuit and autozeroed signal; (b) shows voltages in (a).

Usually the measured offset is stored on a capacitor.

Its discharge must be much slower than the offset mesurement period.

Auto-zero circuits

Open-loop cancellation

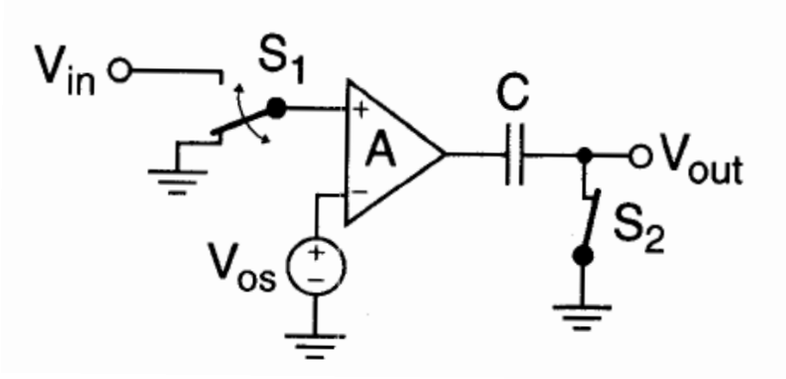

Closed-loop cancellation

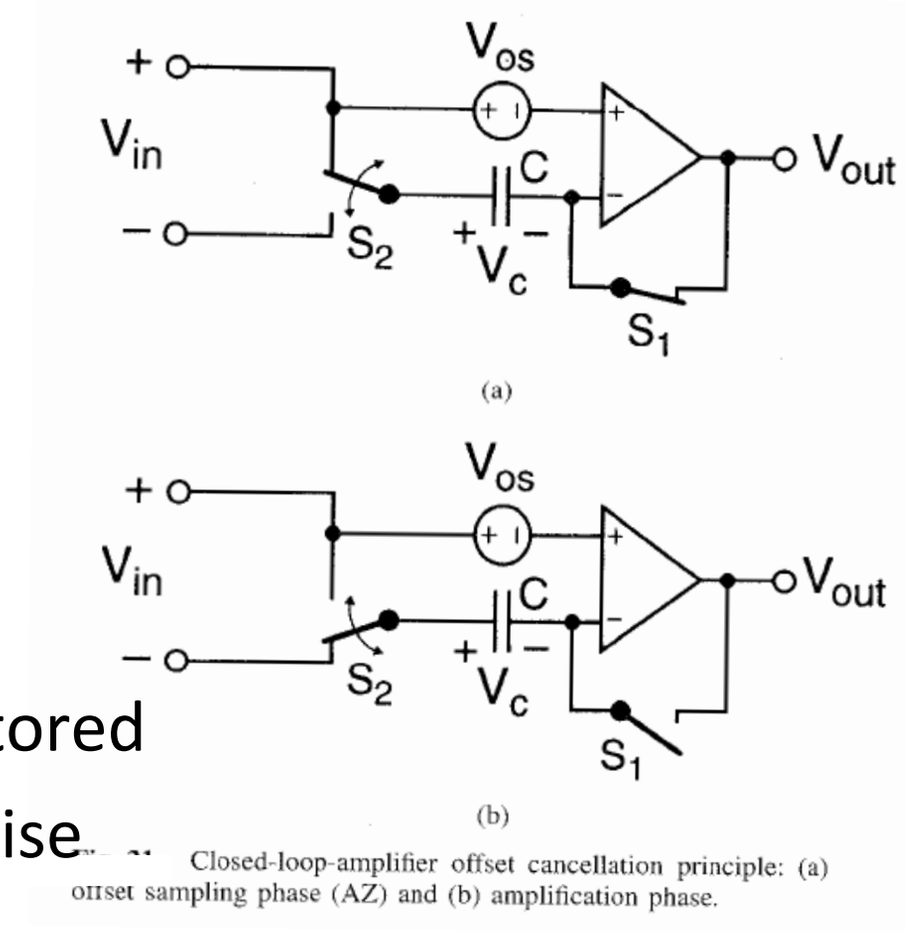

Closed-loop-amplifier offset cancellation principle: (a) offset sampling phase (AZ) and (b) amplification phase.

In closed-loop cancellation, the offset is stored on a floating capacitor which is more precise in switched capacitor circuits.

Auto-zero circuit with two amplifiers

The drawback of auto-zeroing is that during the measurement, the principal function of the circuit is not operating.

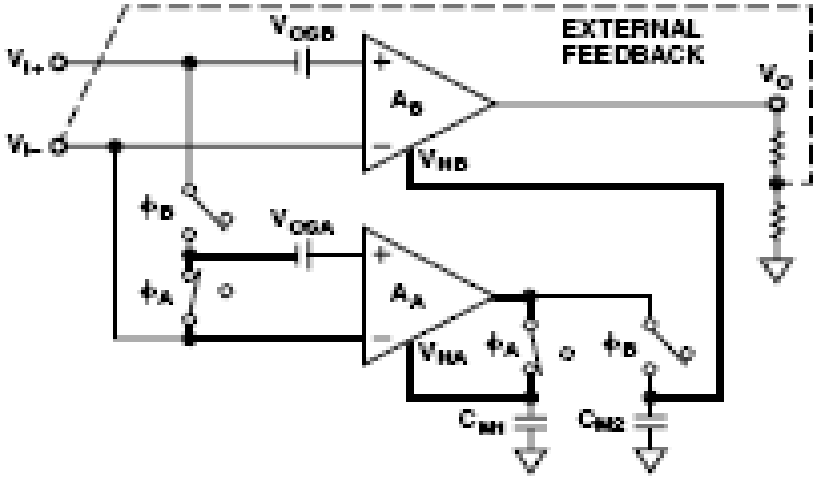

a. Auto-Zero Phase A: null amplifier nulls its own offset.

Two parallel amplifier stages avoid this problem:
The null amplifier measures ‘on-line’ the main amplifier offset.

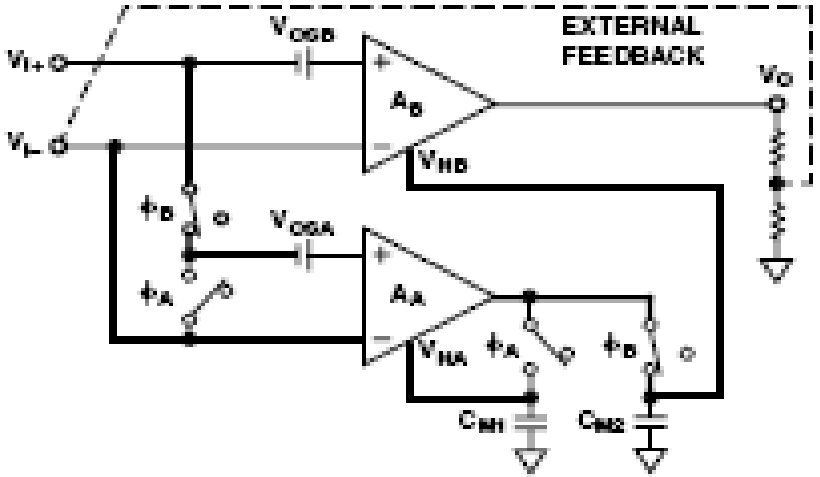

b. Output Phase B: null amplifier nulls the main amplifier offset.

Chopper amplifier principle

Correlated double sampling: The input signal is frequency shifted (modulated), while at the end of the chain the output is demodulated again.

Application: in A/D converters.

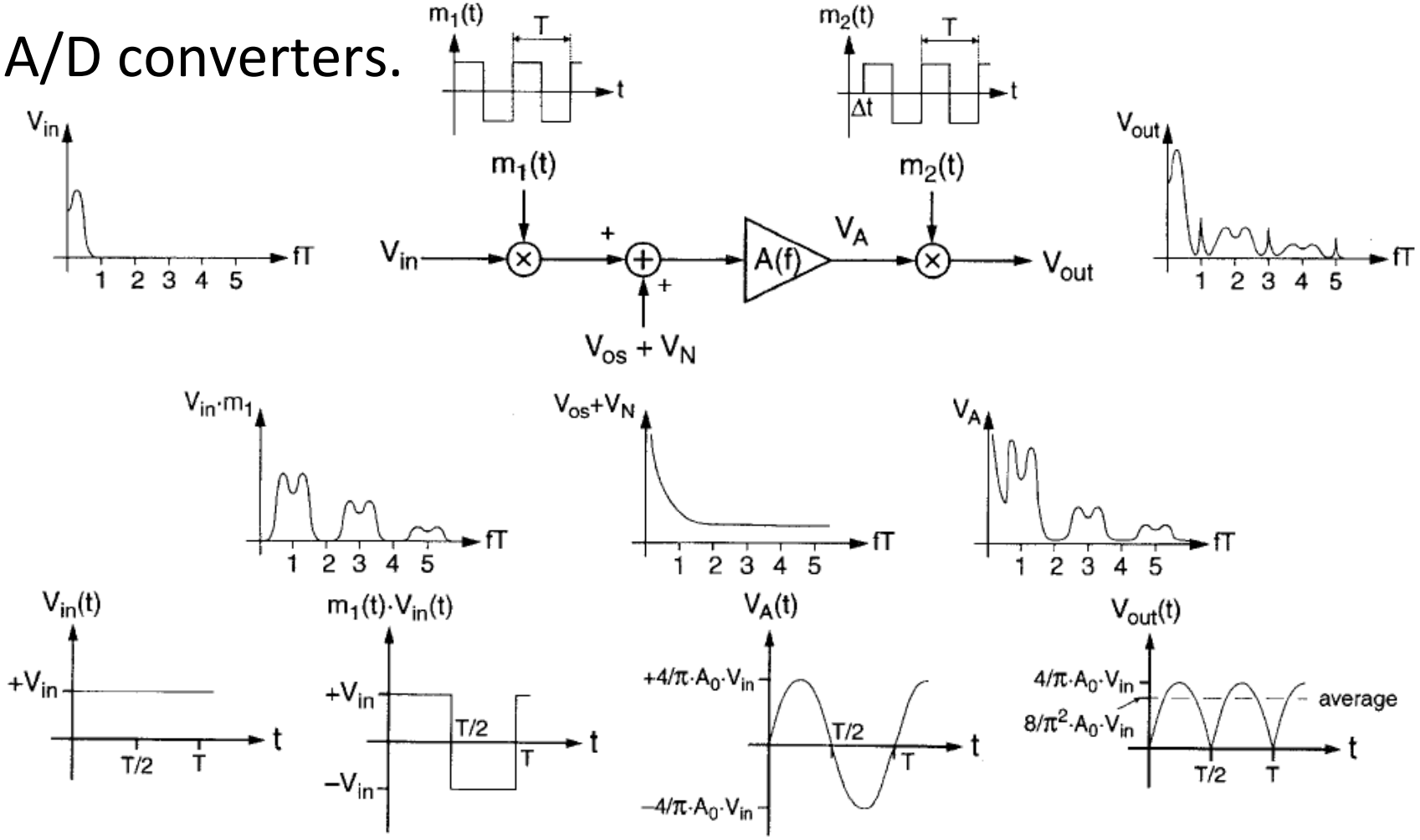

Chopper amplifier circuit

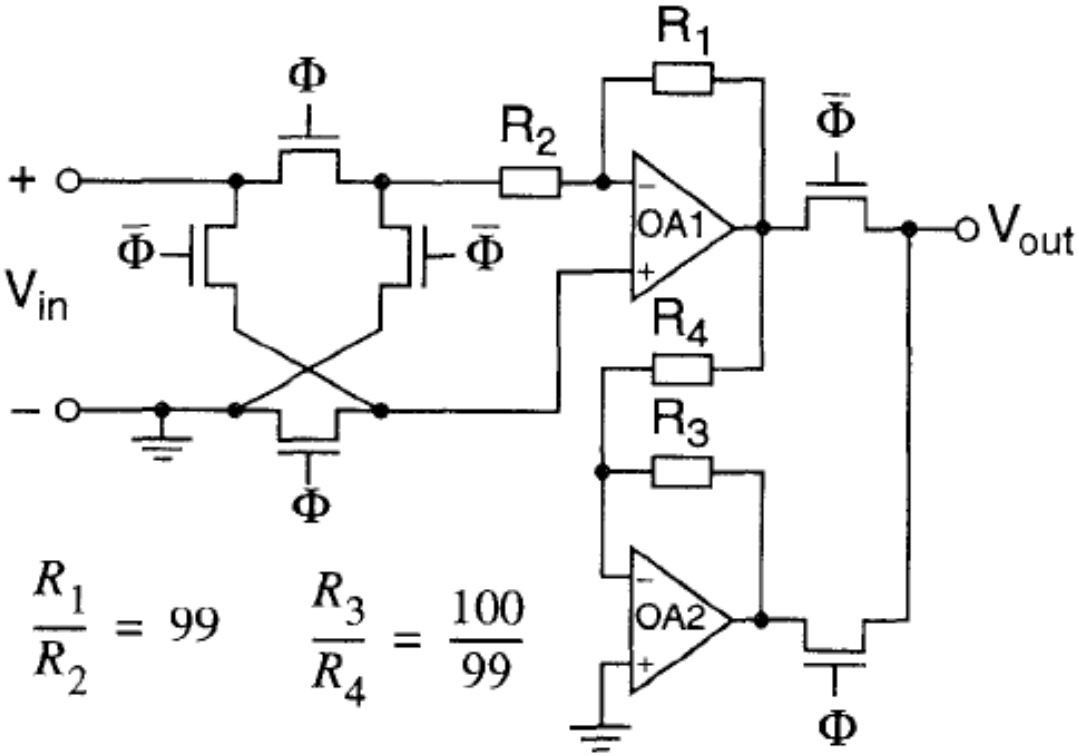

$$\frac{R_1}{R_2} = 99 \qquad \frac{R_3}{R_4} = \frac{100}{99}$$

Chopper amplifier switches are generally FETs.

The technique lends itself to use in MOS-FET circuits.

Only two synchronous clocks are used, of opposite phases and with no overlapping.

Exercice: Noise floor of photodiode current to voltage converter

Determine the transfer function of the circuit below with and without the feedback capacitor C_L. Explain the improvement realized with C_L.

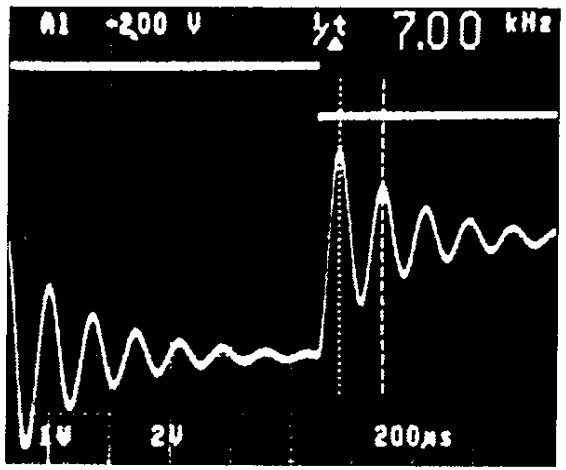

Response of a photodiode with uncompensated circuit.

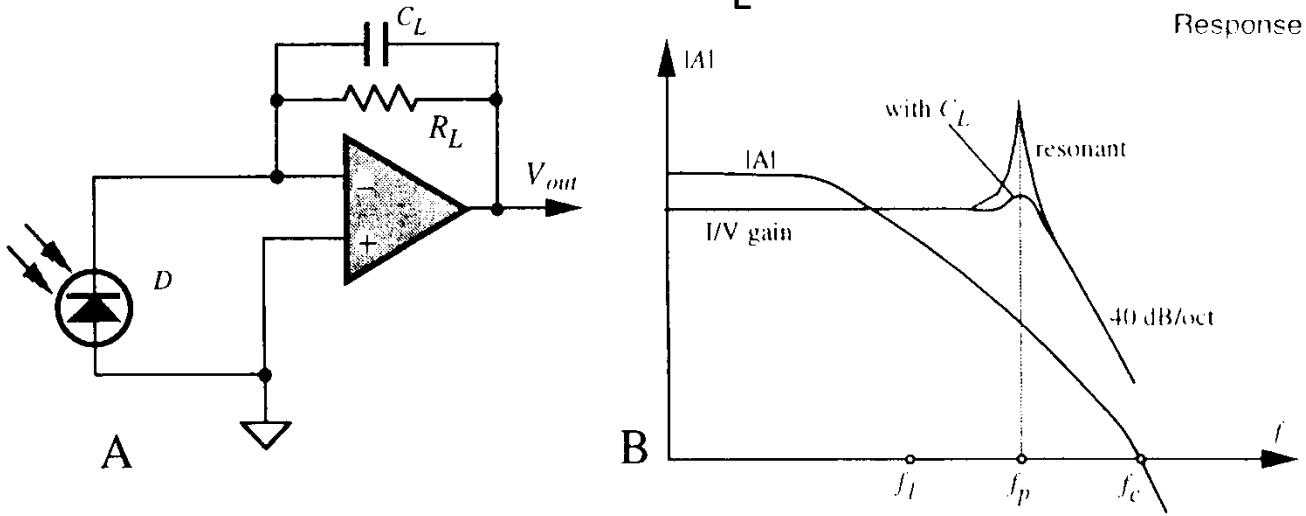

Use of current-to-voltage converter (A) and the frequency characteristics (B).

Determine the output noise voltage noise density spectrum for an OP37 amplifier, BPW34 photodiode, R_L = 100kΩ, C_L such that Q = 1.

Carrier Frequency Measurement Circuits

Carrier frequency measurement circuits

1 – Injection signal generation

2 – AC bridges for complex impedances

3 – Differential inductance measurement

4 – Differential capacitance measurement

5 – Parallel resonance operation

6 – Synchronous demodulation

7 – Feedback loop sensing

8 – Impedanc to digital conversion

(1) Injection signal generation

Synchronous with clock signal for precise frequency and phase control

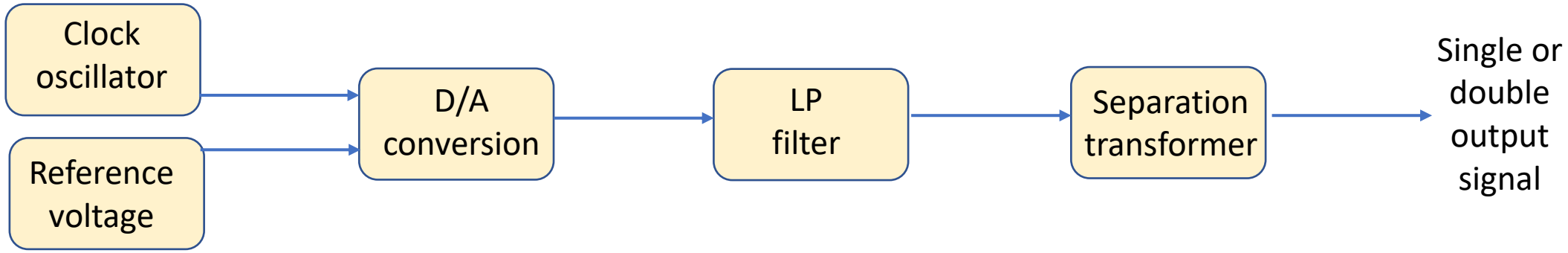

(2) AC bridges for complex impedances

Complex impedances

$$\frac{Z_1}{Z_2} = \frac{Z_3}{Z_4}$$

2 nulling conditions:

amplitude and phase

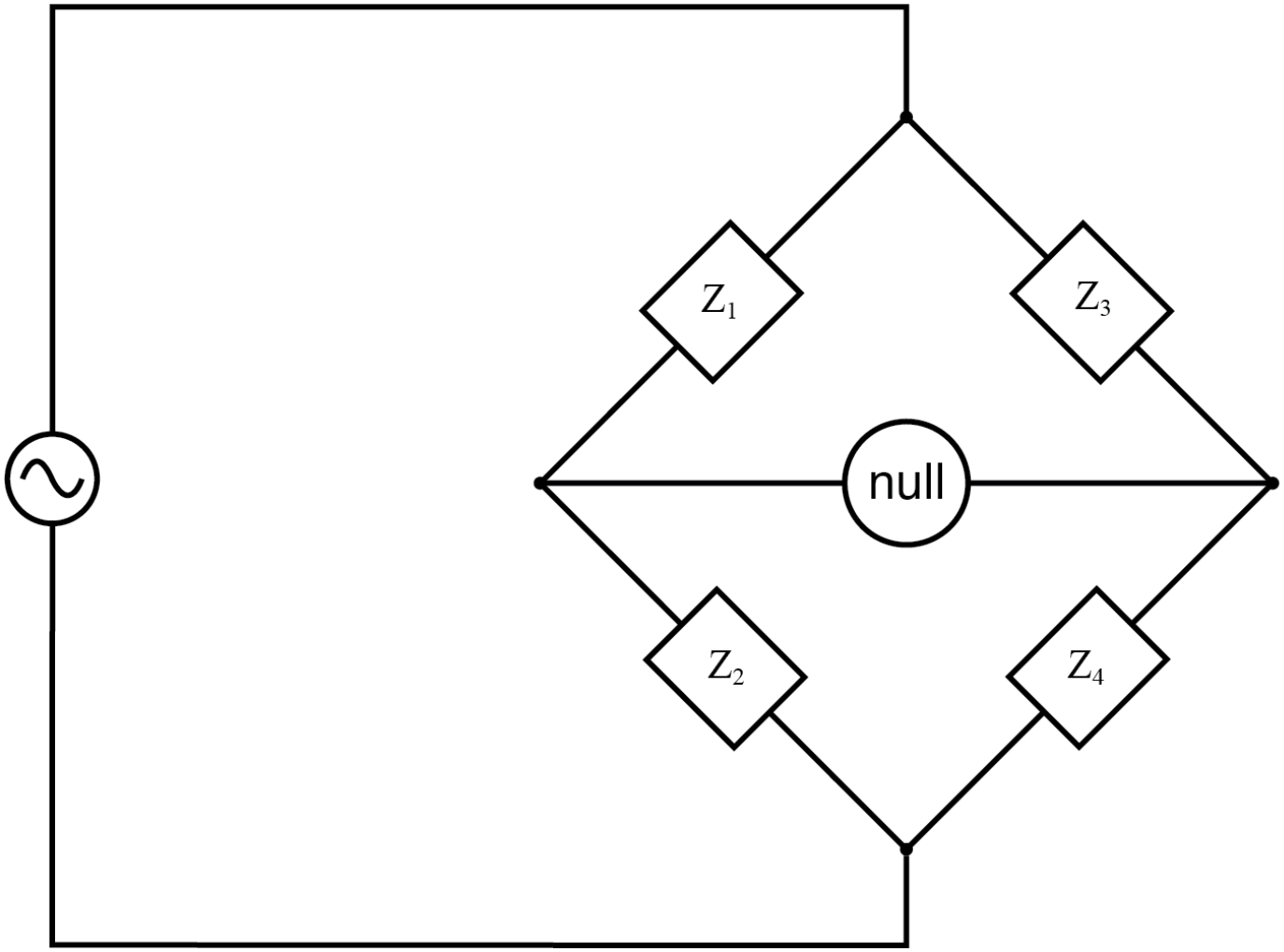

(2) Schering bridge

Exercice: develop the nulling condition

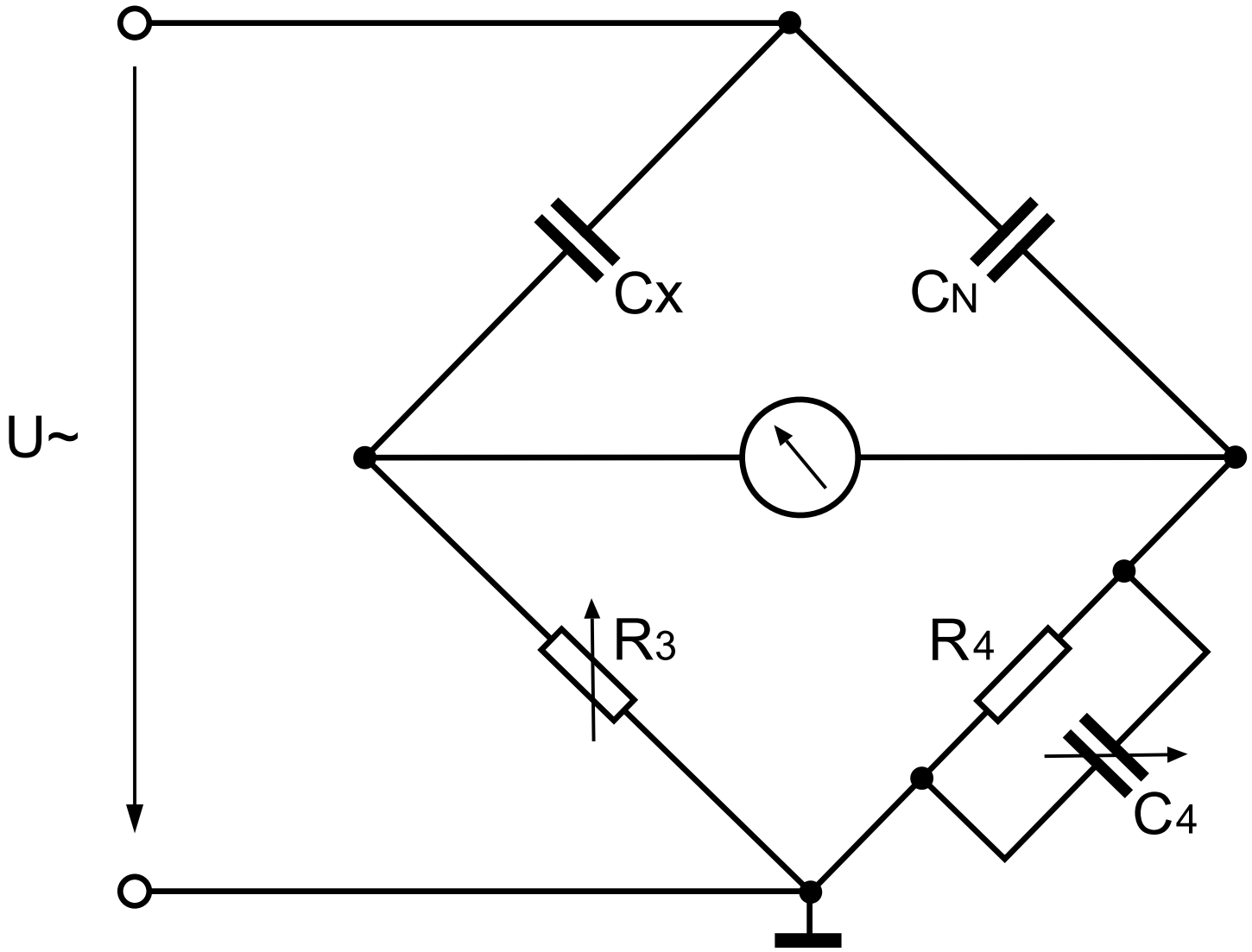

(2) Maxwell-Wien bridge

Exercice: develop the nulling condition

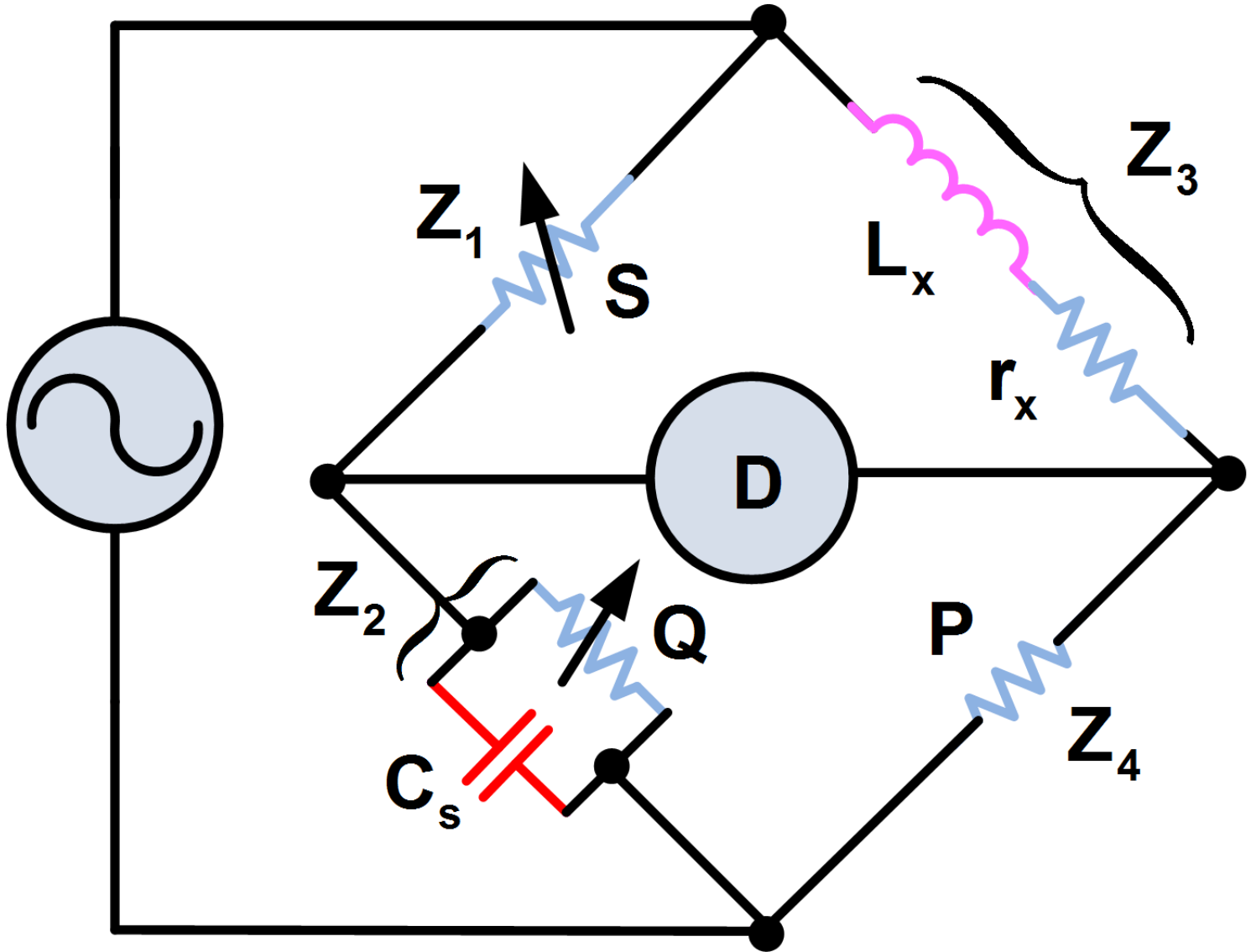

(2) Wagner earth

Minimize the influence of stray capacitance

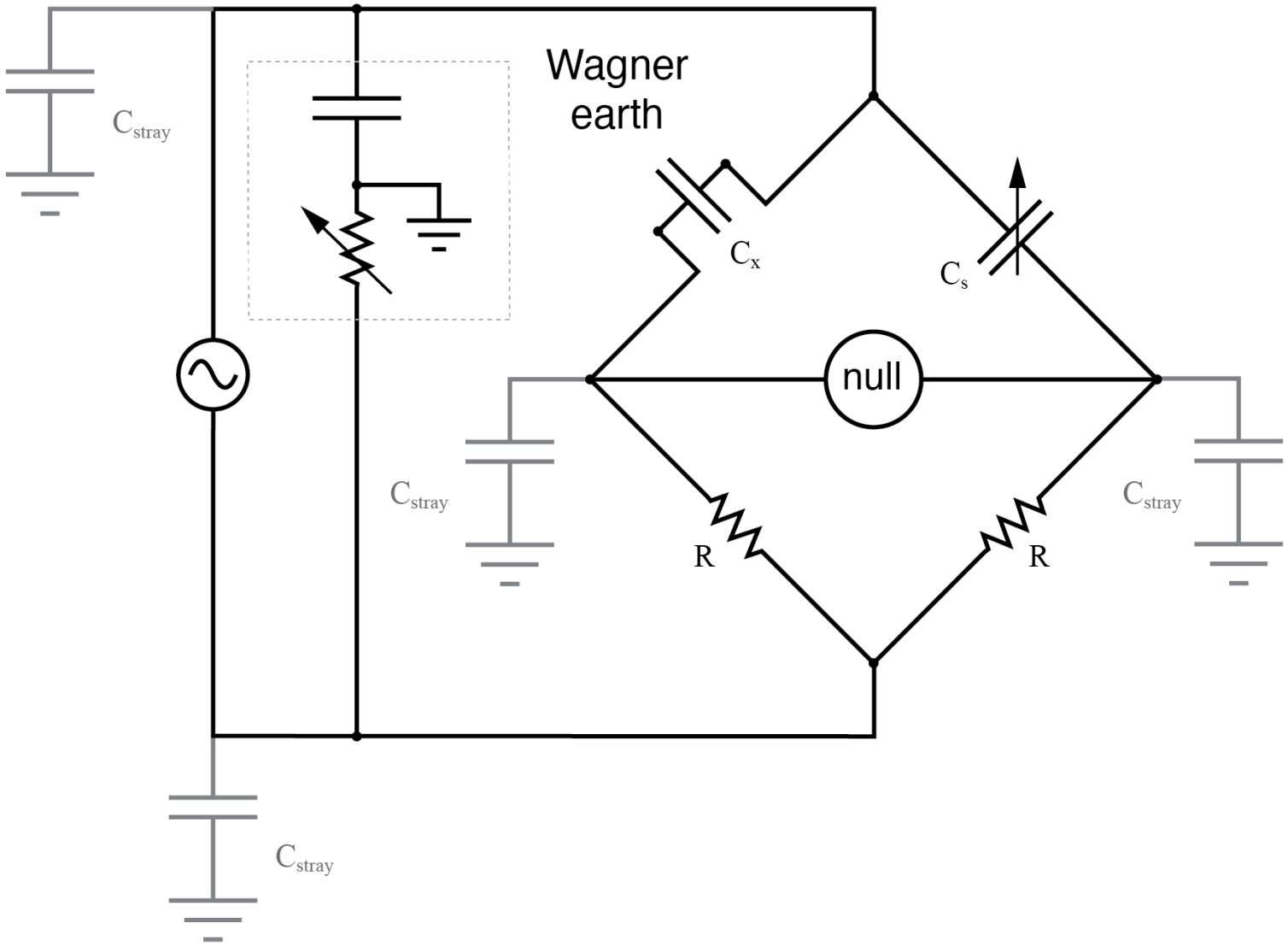

(3) Differential inductance measurement

Shaft torsion modifies coupling between primary and secondary windings

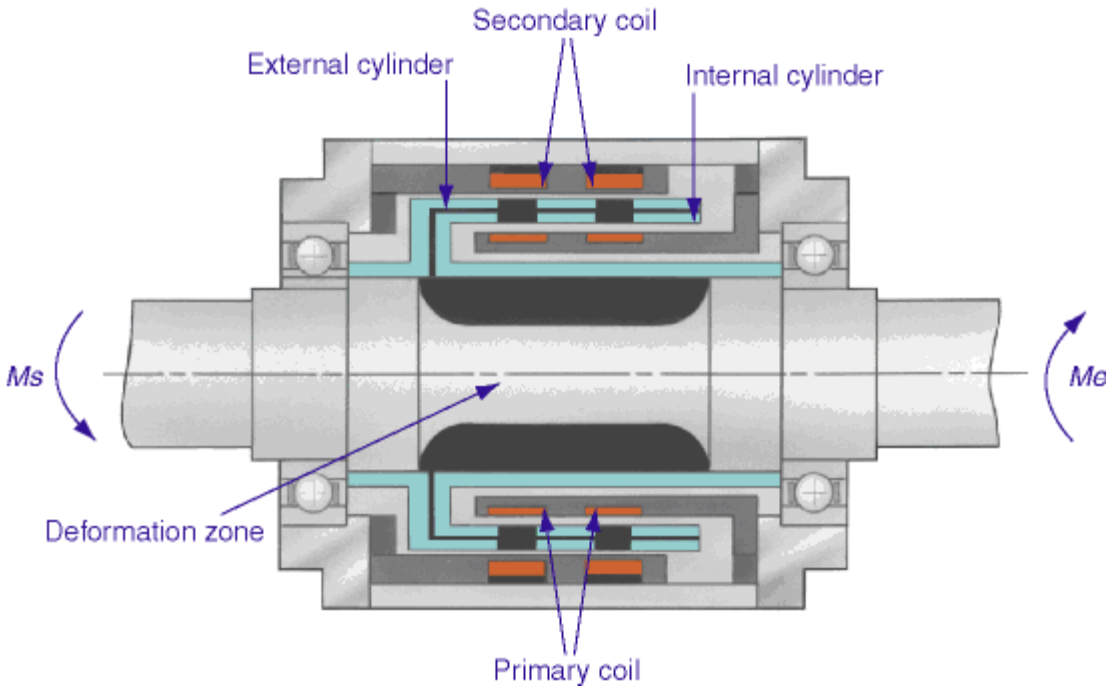

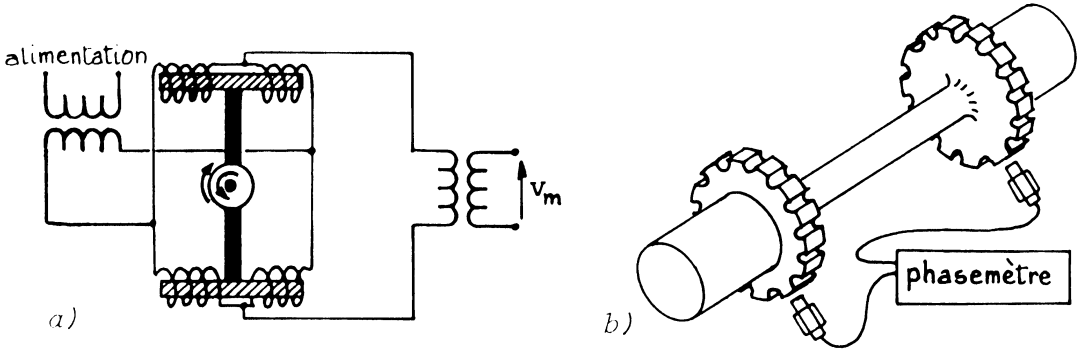

Couplemètres à mesure d'angle de torsion par capteurs inductifs : a) à noyaux mobiles (Doc. Vibrometer S.A.); b) de proximité.

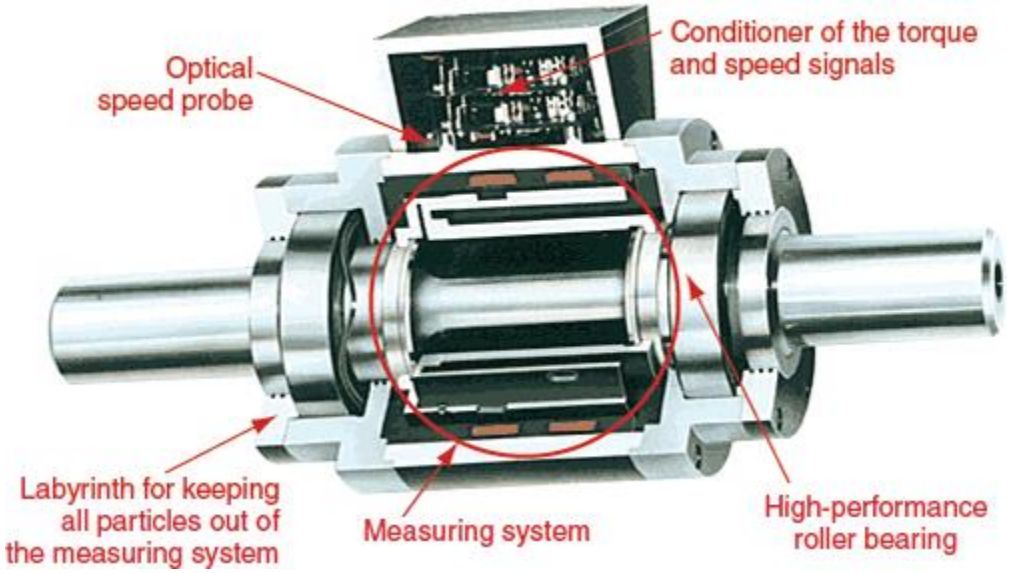

(4) Differential capacitance measurement

Center electrode current is zero in center position.

For a single ended measurement, the lower half (C_2) of the sensing circuit is omitted.

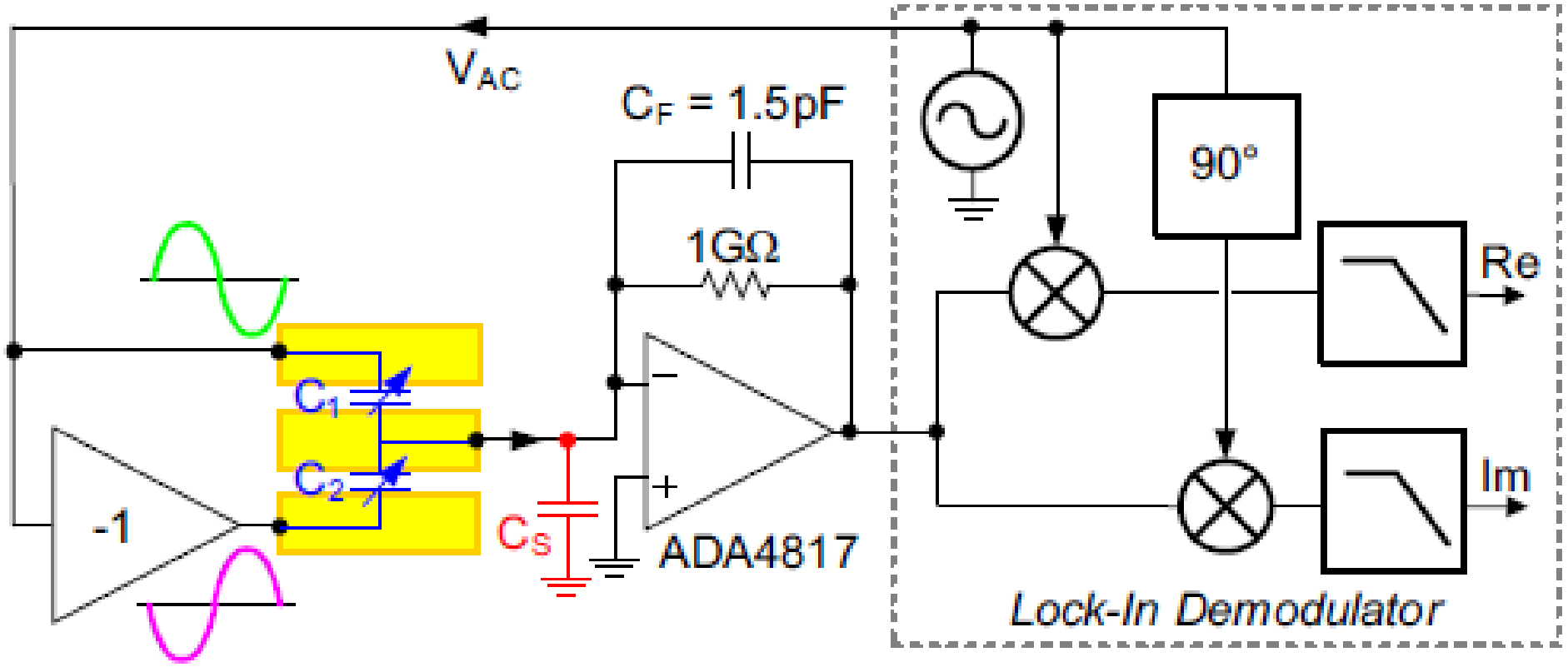

(5) Parallel resonance operation

Usually the bridge is operated in short circuit on the secondary side of the transformer, to generate maximum current through the differential imepdances (capacitors) Z_1 and Z_2.

Exercice:

- Determine the noise at the bridge output
- How does the noise change if Cp is added so that a parallel resonanace is formed with the transformer?

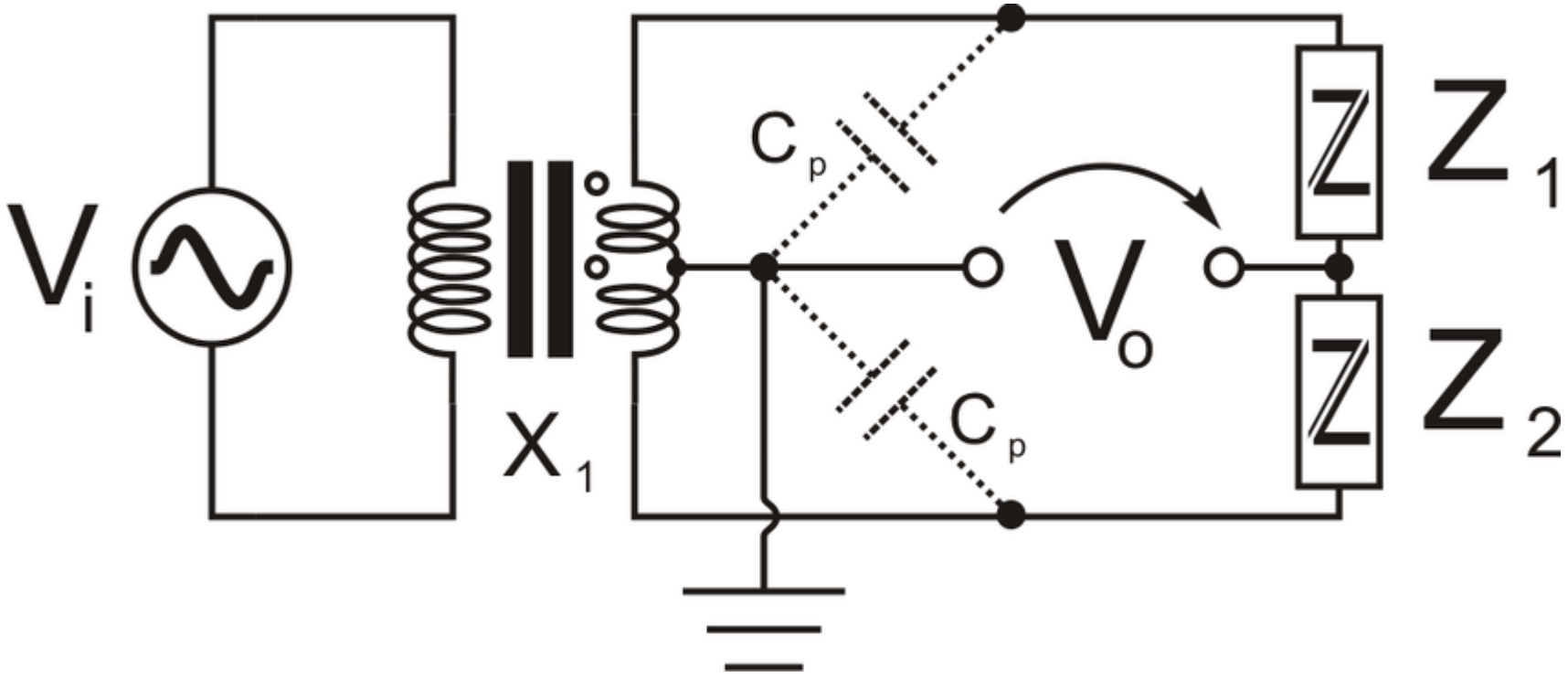

(6) Synchronous demodulation

Advantages:

- bipolar measurement
- out-of-band noise rejection (corresponds to correlated double sampling)

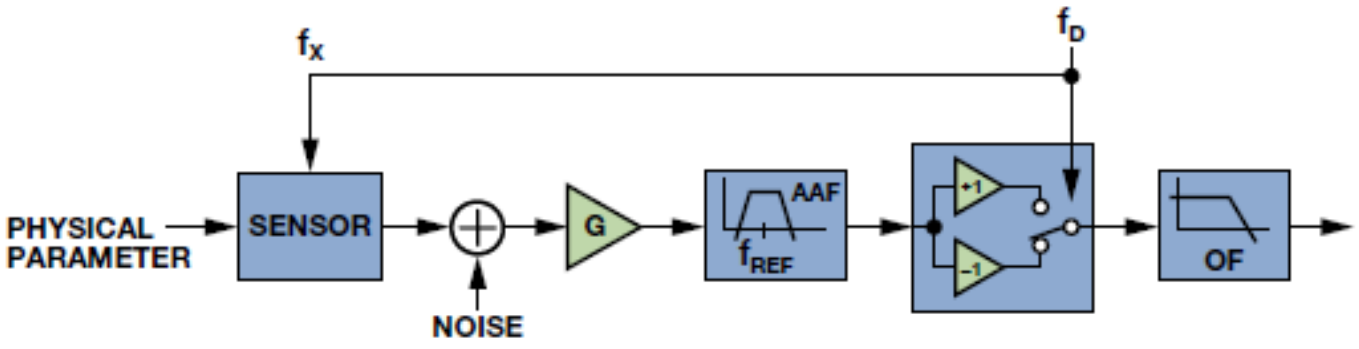

Synchronous demodulation system.

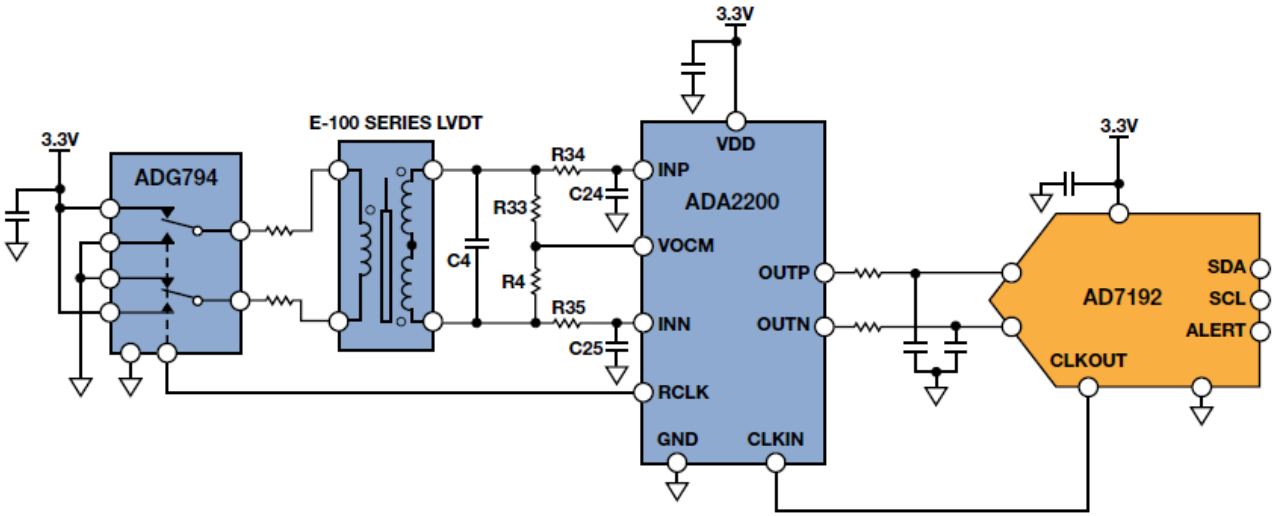

Simplified LVDT position-sensing circuit.

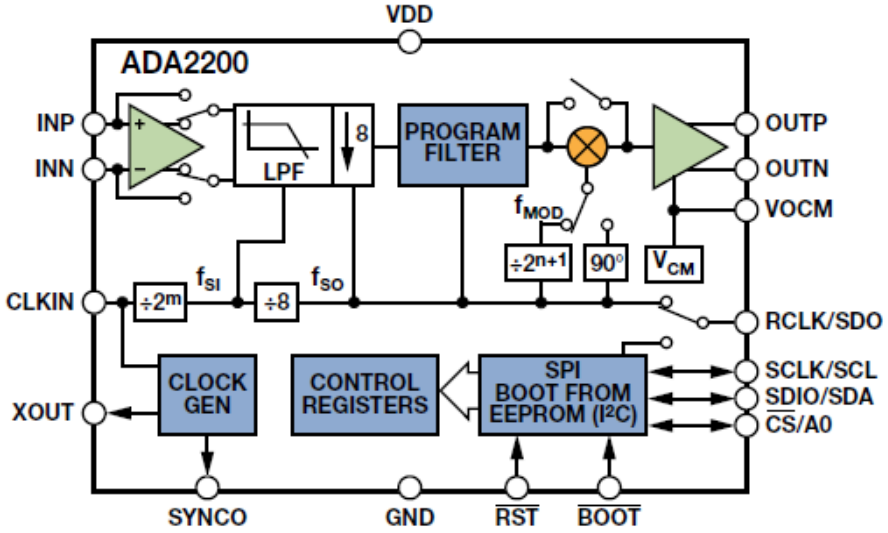

ADA2200 synchronous demodulator.

(7) Feedback loop sensing

Example: Accelerometer

Comb capacitors between proof mass and frame change their capacitance C_s when proof mass vibrates

V_{dr} is a square wave, e.g. at 1MHz.

Feedback electrostatic force is applied to the proof mass through additional electrodes.

The loop is a 2nd order ΣΔ modulator, since the proof mass motion corresponds to a double integration

Exercice : Develop a mathematical model of the loop

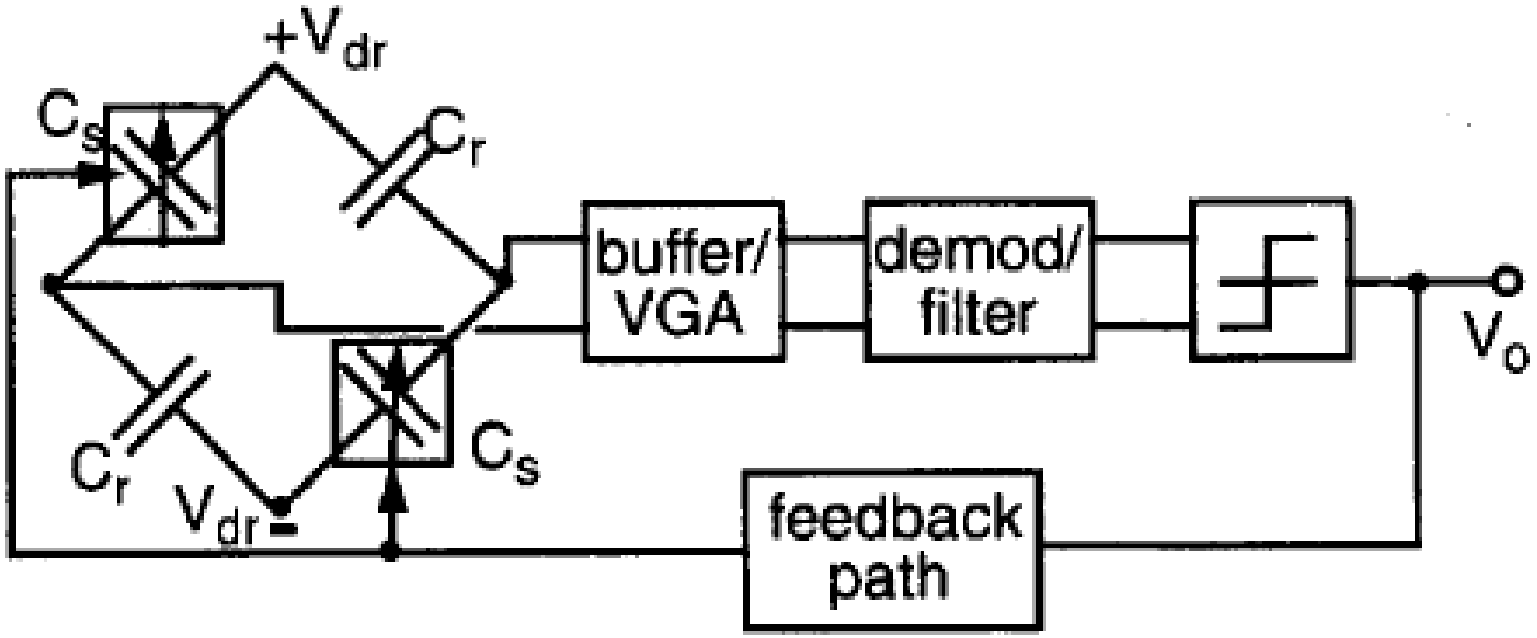

(7) Recall: delta-sigma modulator

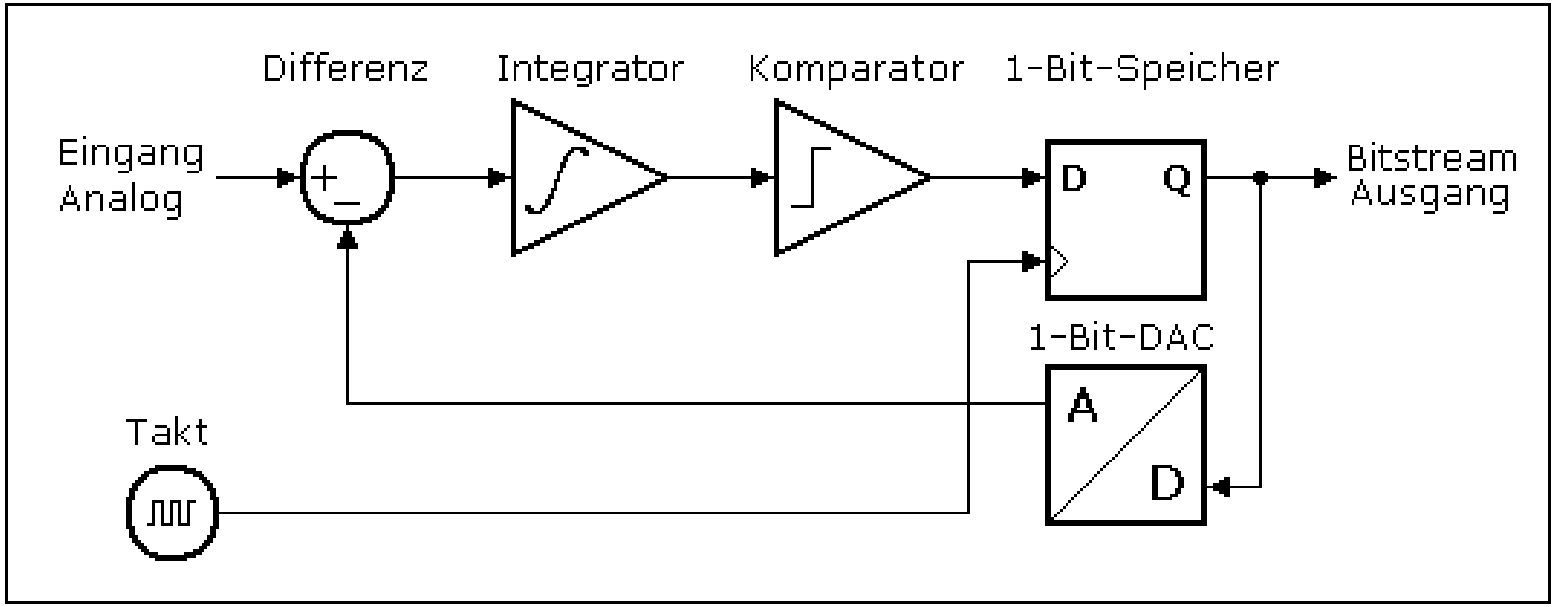

(7) Recall: delta-sigma modulator

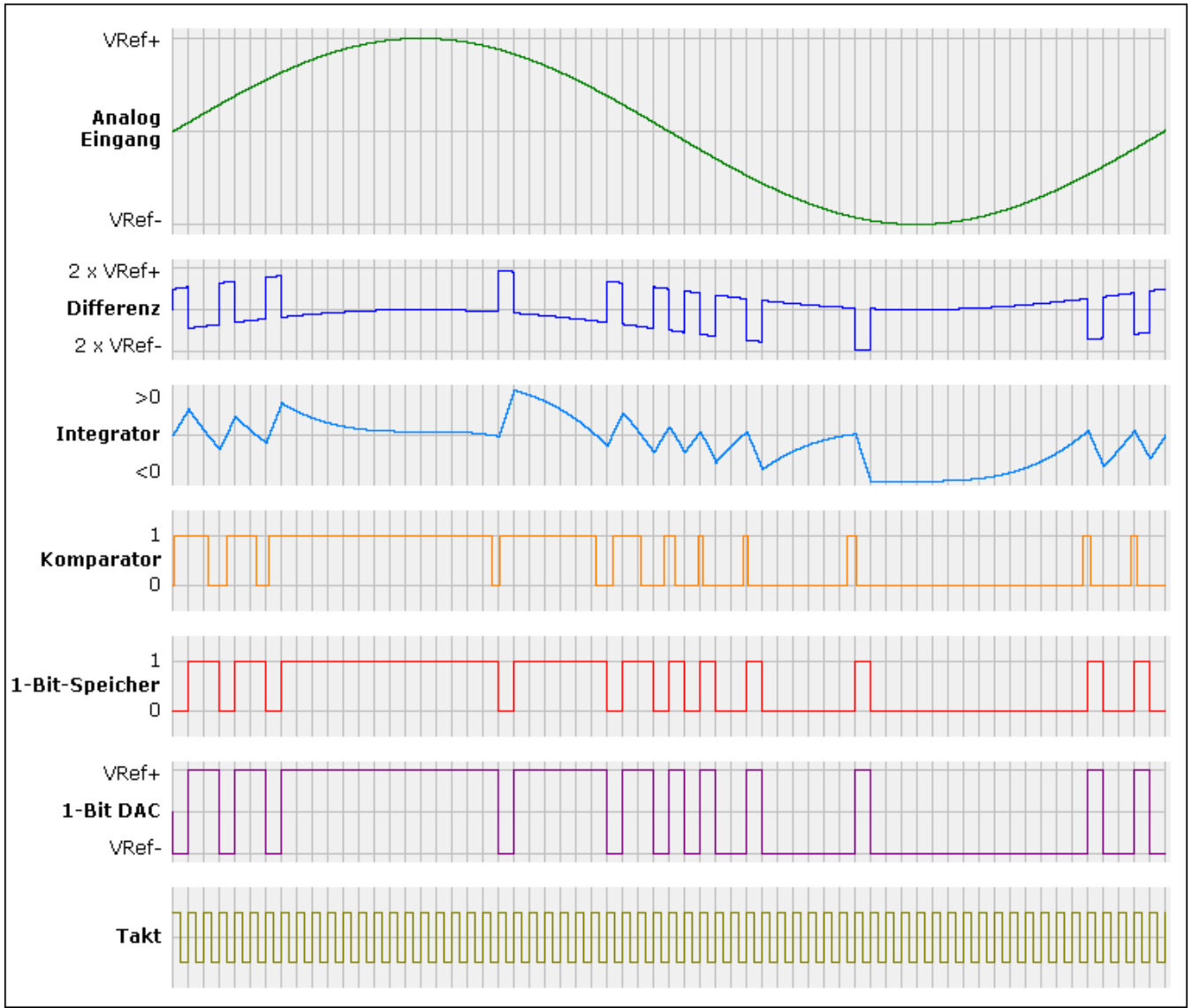

(8) Impedance to digital conversion

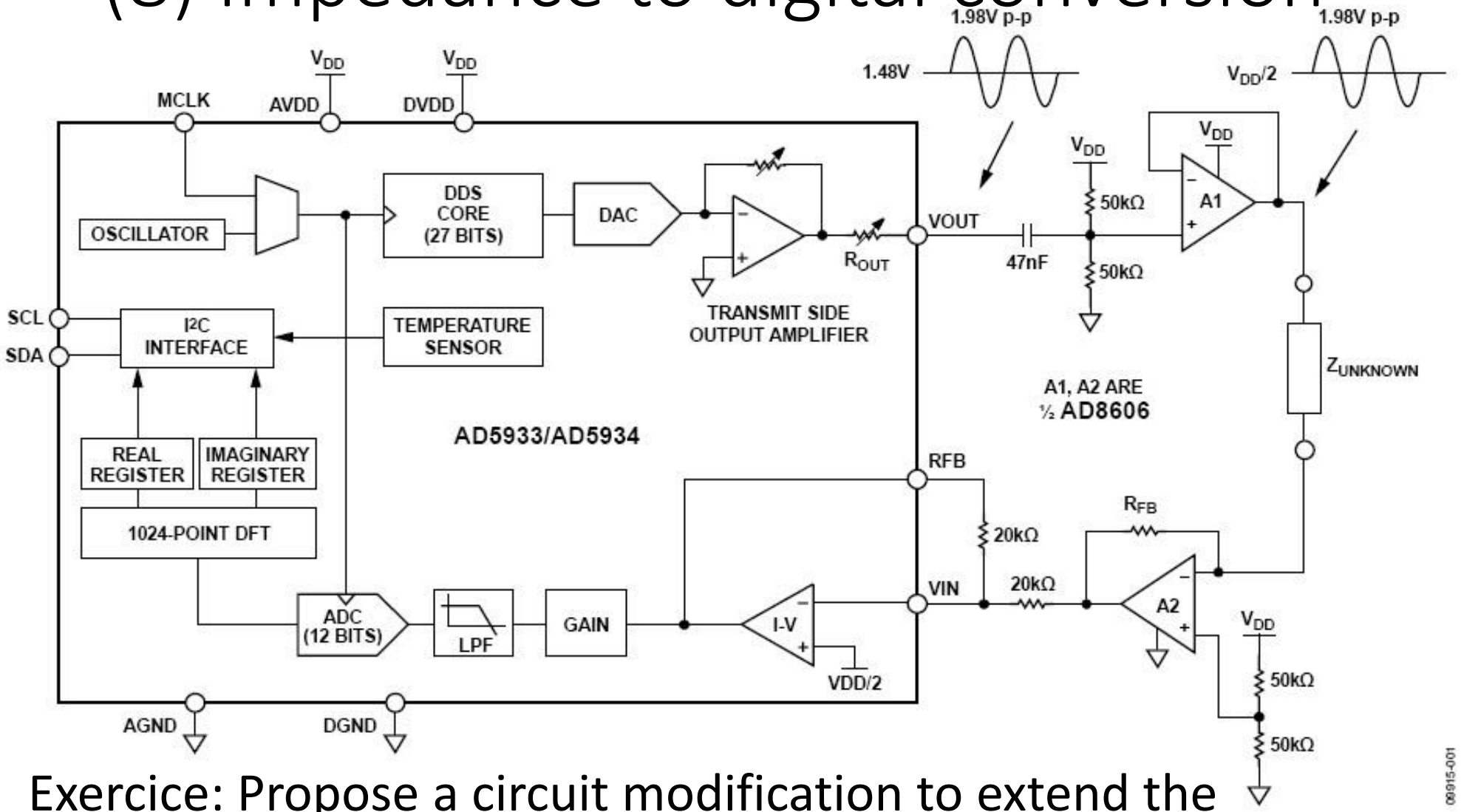

Exercice: Propose a circuit modification to extend the measurement range up to 10MΩ

(8) Resolver to digital conversion

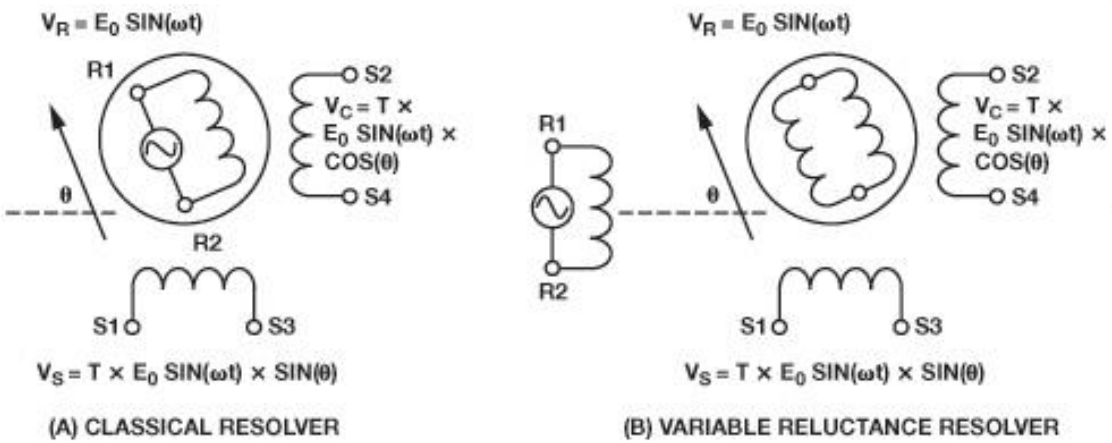

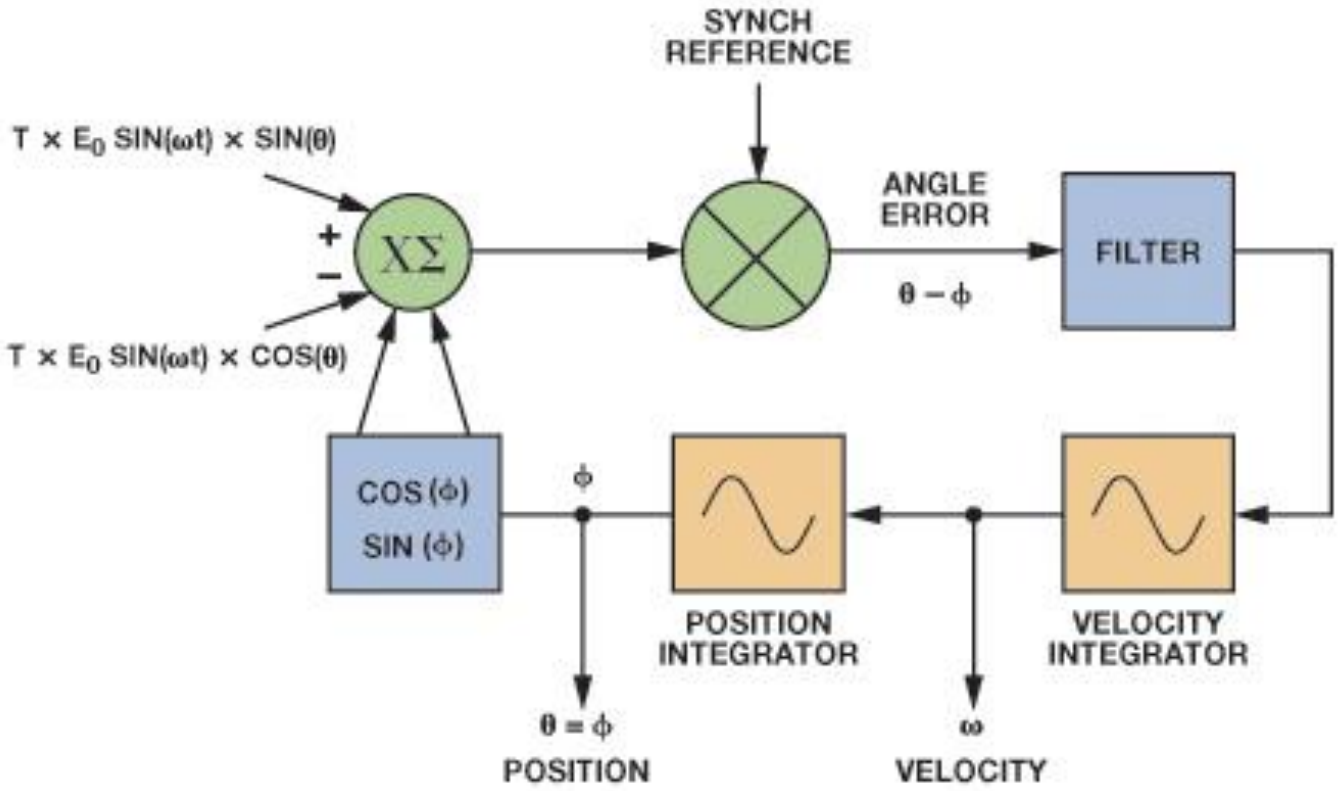

(8) Capacitance to digital conversion

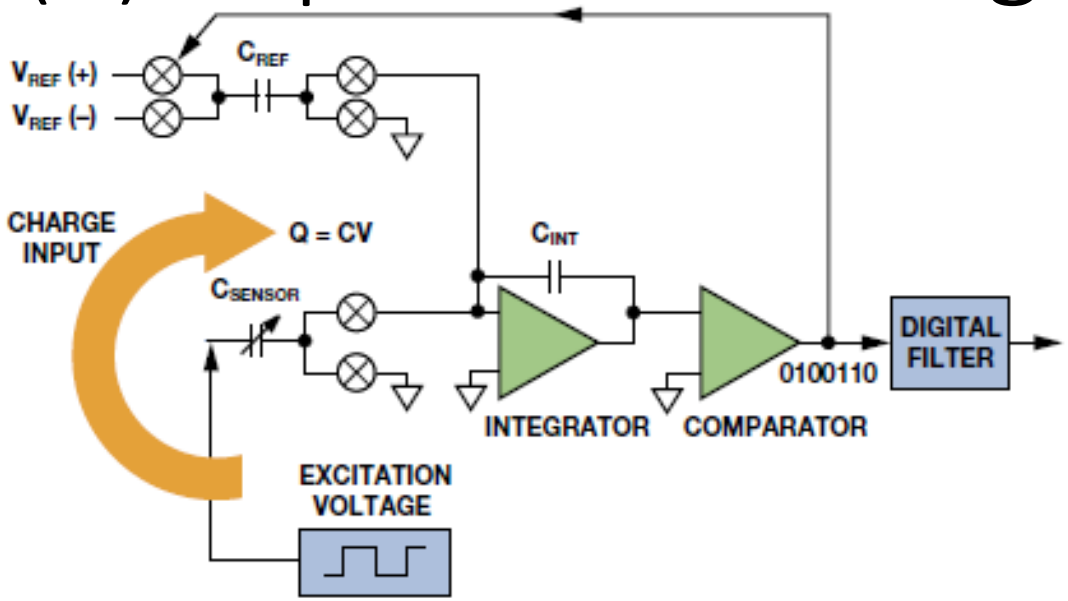

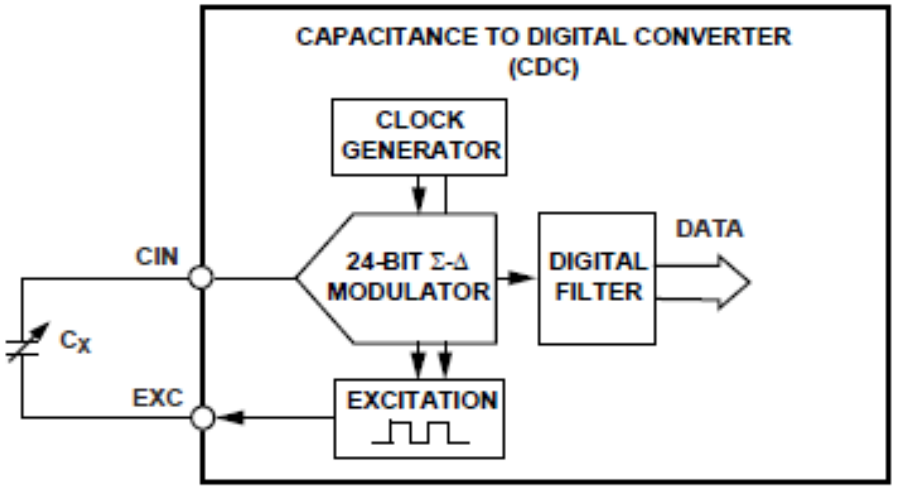

CDC Simplified Block Diagram

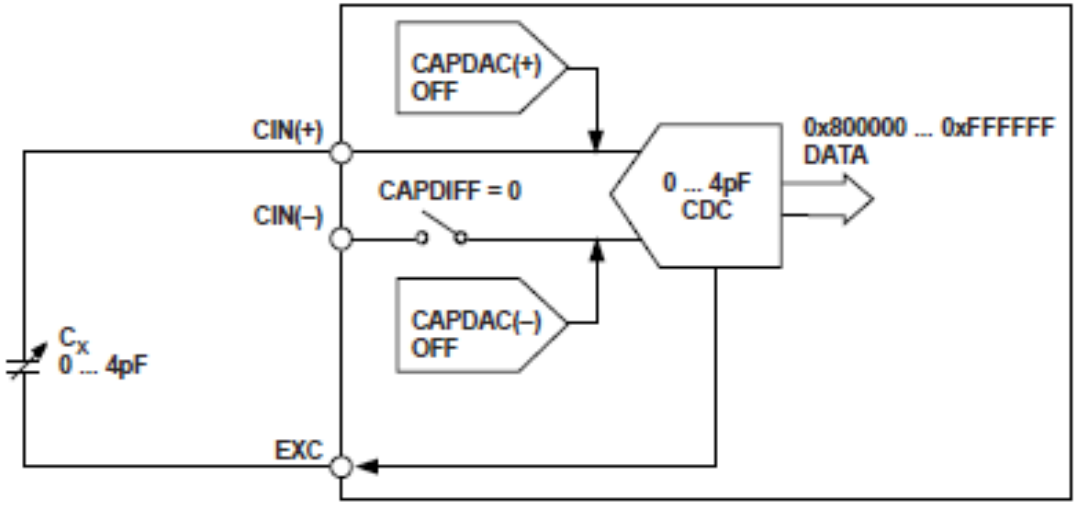

. CDC Single-Ended Input Mode

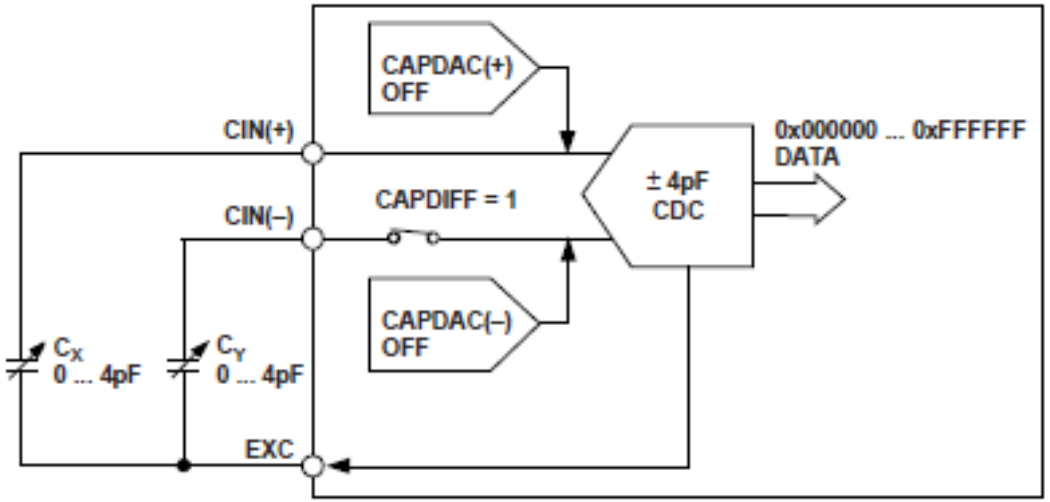

. CDC Differential Input Mode

(8) Capacitance to digital conversion

- Develop a Spice, and following a Simulink / Simscape model of the capacitance-to-digital conversion based on a sigma-delta modulator.
- Determine a mathematical model of the capacitance measurement circuit.
- Design a filter-and-decimation stage after the demodulator.
- Implement the filter in Simulink, and test it.

Configuration, calibration, linearization and self test

(1) Configuration of the measurement

Sensors and signal processing modules are often generic products which the customer can tailor to his application.

The output range (e.g. 0…10V or 4mA…16mA for analog outputs, or a numeric range of a digital output) can be adapted by the user to an input range of the measured quantity, which is smaller than the maximum range for which the manufacturer designed the sensor.

Also, the environmental conditions can be configured for, e.g. by setting a compensation for a specific operating temperature.

(1) Teach-in of the range of measurement

The range of measurement can be set in smart sensors by a microcontroller.

A calibration procedure must be followed, typically:

- Adjust one extreme position, press a button to memorize it
- Adjust the zero position (if applicable), press a button to memorize it
- Adjust the other extreme position, press a button to memorize it.

The adjustment can be done after installation, which simplifies the use of the sensor.

(2) Calibration methods

There are different methods of calibration, depending on the detail of correction to be applied to the measured signal:

- Only offset correction
- Only range adjustment
- Offset and range adjustment
- Multipoint characterization, for precise linearization
- Compensation of additional influences, often temperature

(2) Offset (one-point) calibration

Offset correction:

- Null the input, read the output.
- Subtract the measured offset from subsequent measurements.

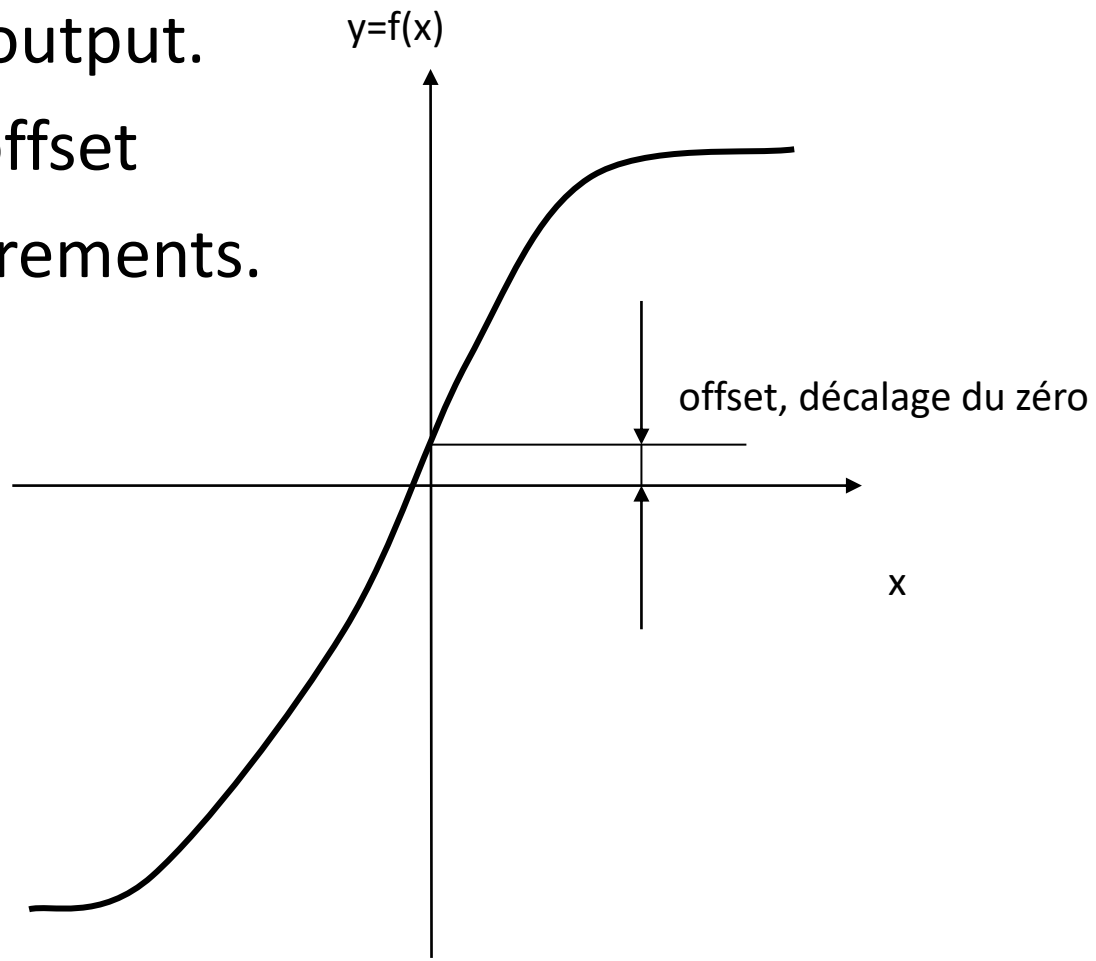

(2) Range (two-point) calibration

Determine the range bounds of an application by measuring the extreme values.

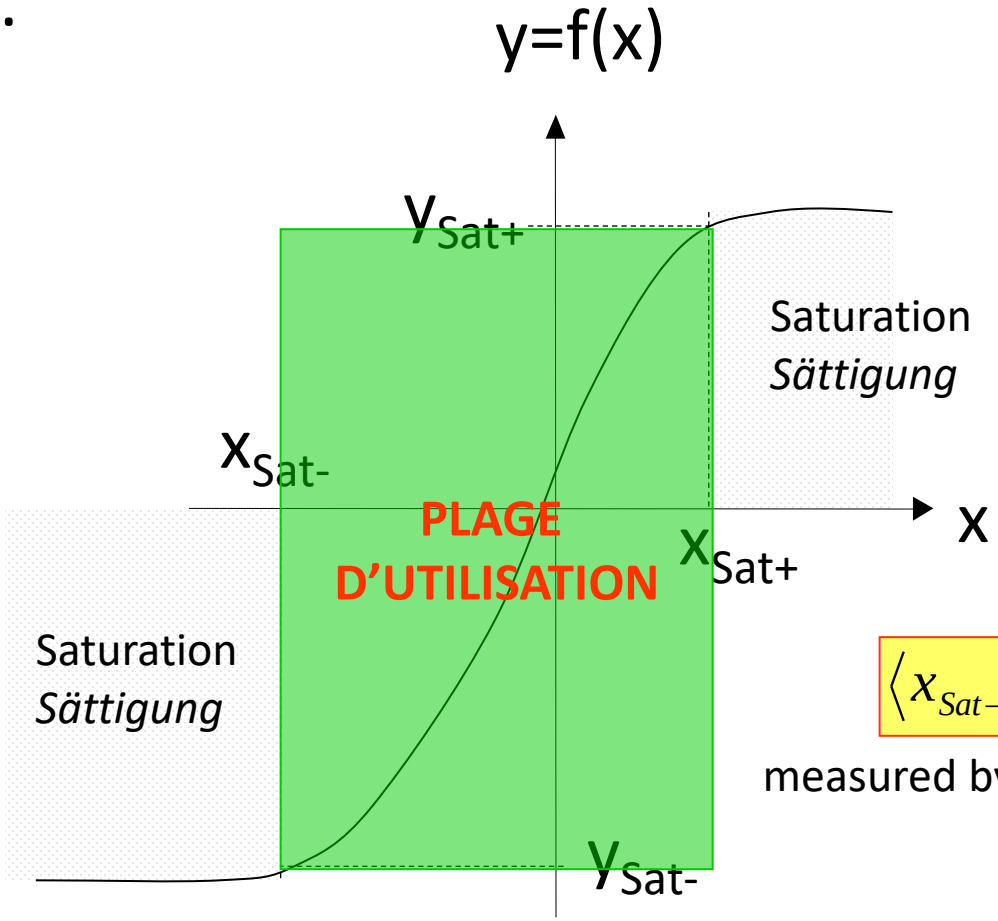

$\langle x_{Sat-} \ldots x_{Sat+} \rangle$ → $\langle y_{Sat-} \ldots y_{Sat+} \rangle$

measured by calibration — defined

(2) Offset and range (three-point) calibration

With three calibration points, two different sensitivities for positive and negative values are determined, or alternatively, an asymmetric measurement range can be set.

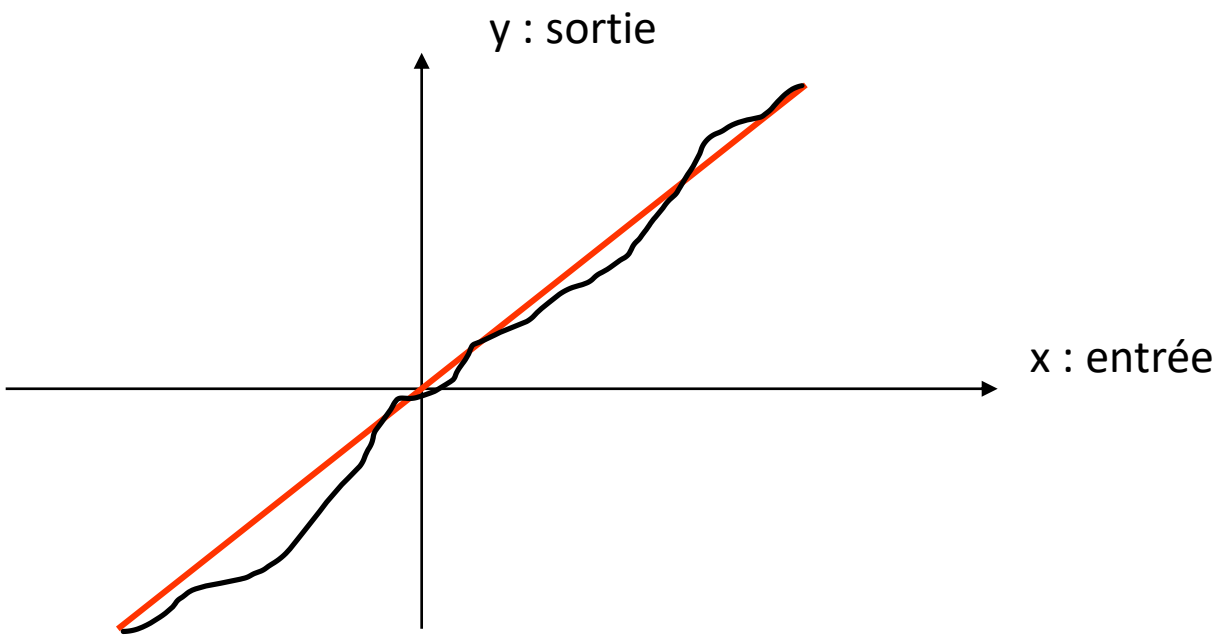

(3) Linearization

Linearization can be done in two ways:

- Around an operating point (based on first order derivative of the measuement funtion)
- Over an interval or a series of interval: approximation by a first or higher order polynomial

In the latter case, non-linearity compensation by polynomials can be either for an extended interval with a series of points the polynomial has to go through, or with different polynomials for each interval (e.g. splines) or in an optimization approach, by minimizing a cost function over the interval (polynomial fit).

(3) Linearization : exercice

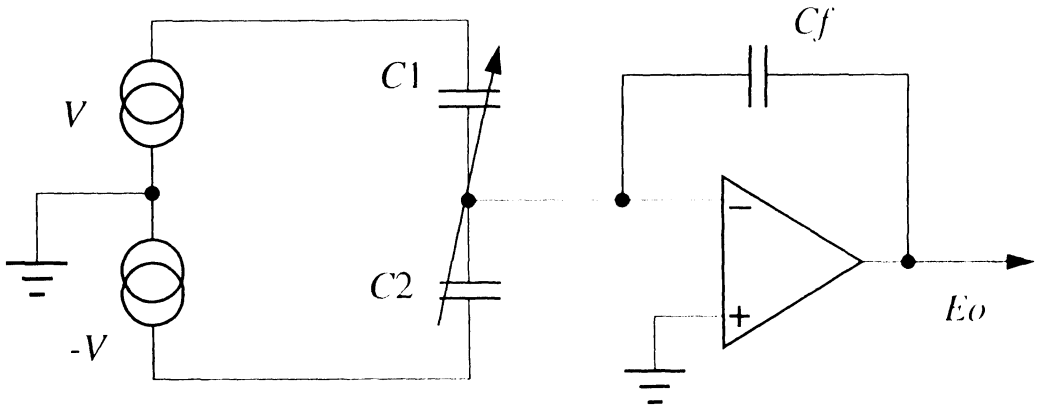

Linearize the characteristic of a differential capacitive position sensor.

$V = 10V$, $C_0 = C_f = 10pF$, $d_0 = 100\mu m$,

$-80\mu m < x < 80\mu m$

a) Assume the amplitude of E_0 is digitized in a 12bit word. E_0 is then multiplied with a correction factor c_{lin} stored in an array. The array has 8 éléments, and each element is valid for a distance interval of 10 µm, equally for positive or negative displacements. The c_{lin} values are stored in 8bit words. What is the maximum precision error of the result $x_{lin} = E_0 \cdot c_{lin}$, rounded to 16 bits?

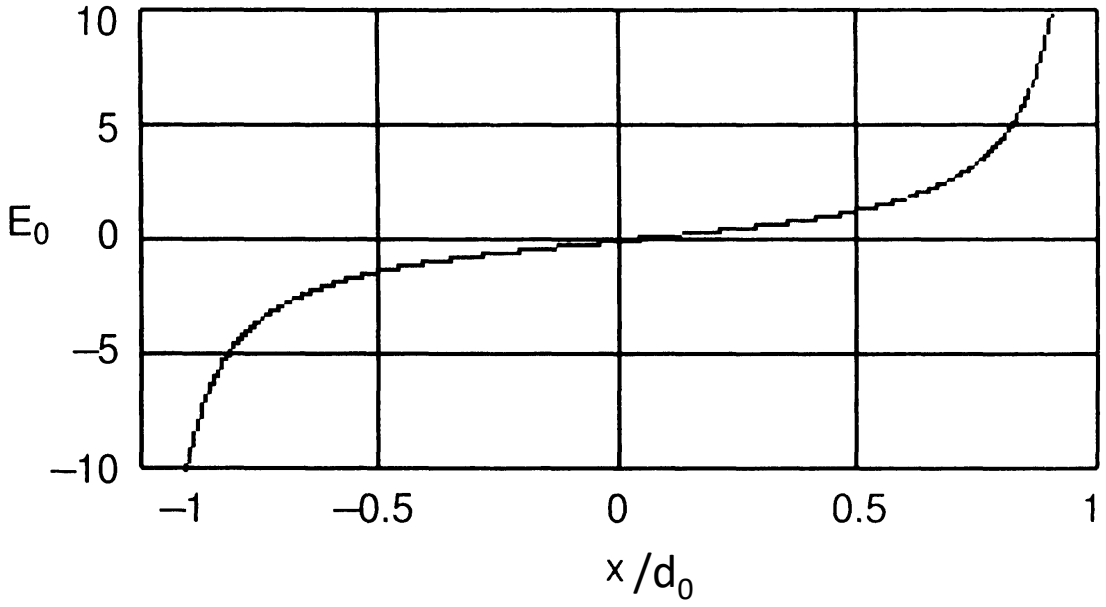

Three-plate micrometer transfer function

$$E_0 = \frac{C_1 - C_2}{C_f} V = \frac{2x}{d_0^2 - x^2} \frac{C_0}{C_f} V$$

(3) Linearization : exercice

b) Design an analog linearity correction circuit and determine the resistors of the network so as to minimize the linearity error. The linearization shall have 4 segments. What is the required precision of the resistors?

(4) Measurement error detection methods

Error detection based on the sensing acquisition:

- The acquired signal has a defined range. If it is outside of this range, an abnormal condition exists
- The acquired signal has a defined bandwidth. If not inside thi bandwidth, an error exists.

Error detection based on the acquisition of auxiliary (hous-keeping) information e.g. temperature, humidity, power supply voltage, power supply current

Detection of cabling errors: missing or shorted signals, modified commmon mode level.

Combined exercice

Objective: Detect wiring problems of the measurement bridge, and a signal processing failure.

a) Examine the MXL90314 functions
b) Explain the measurement circuit, its power supply, and the current loop interface
c) Which wire connection error are detected, and how?
d) How do the BITE signals operate
e) Simulate the normal measurement operation of the sensing bridge.
f) Simulate error conditions.
g) Simulate a self test.

Strain gauge bridge interface

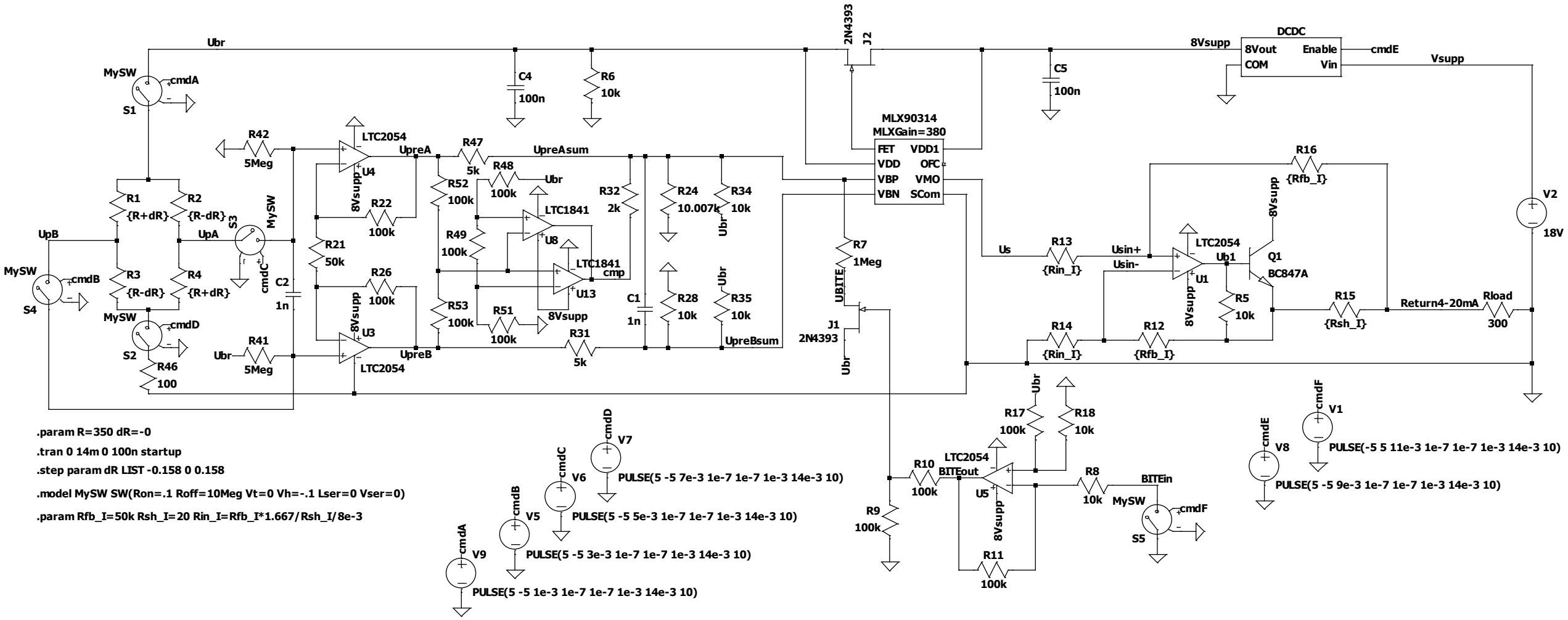

Smart Sensors

1. Accelerometers

Our own Accelerometers

- Living beings have different sensors located in the inner ear that are used to perceive linear accelerations

  = macular system (Saccule and Utricle)

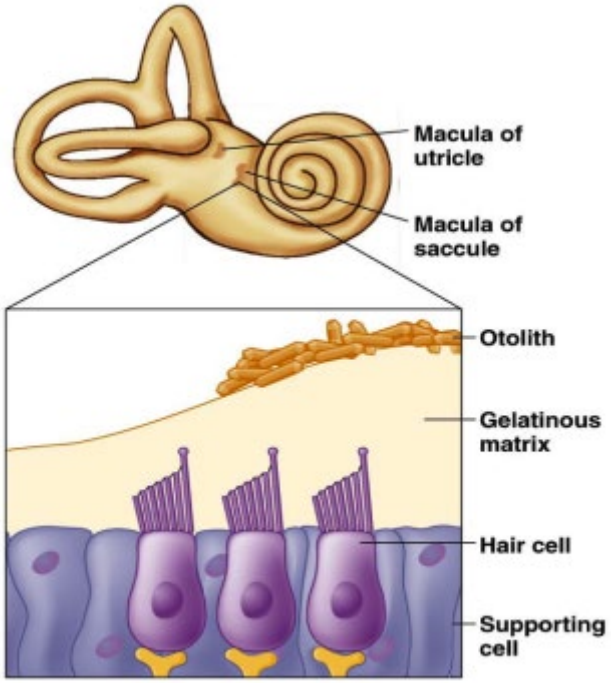

(a) Macula of an utricle or saccule

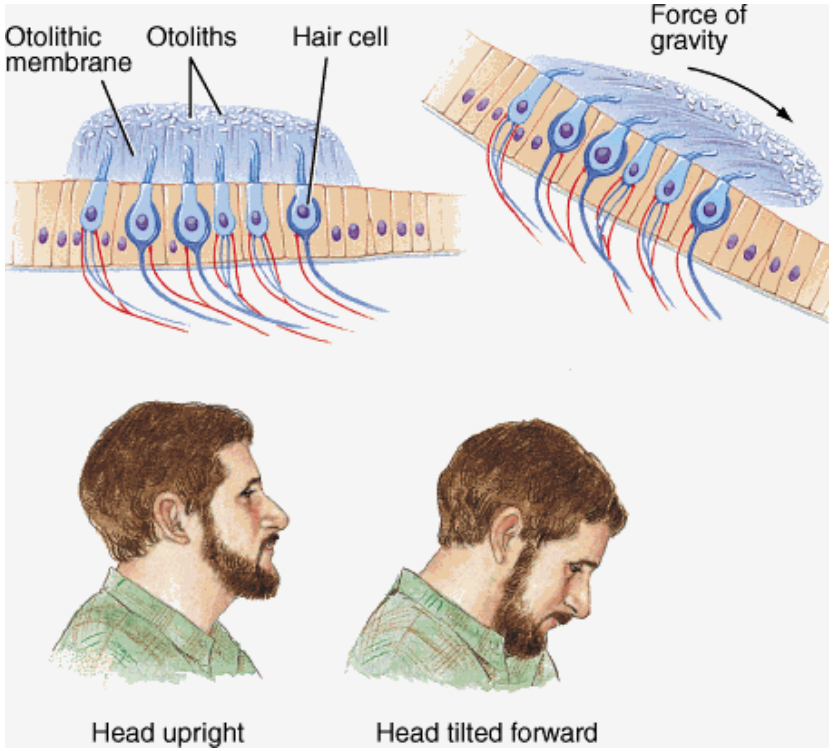

How can an Acceleration be measured?

- Newton's second law, under static conditions

$$F = ma = kx$$

- The static acceleration acting on the seismic mass, m produces a force

- An acceleration produces a motion with a sensitivity of m/k (mass divided by the spring constant)

$$x = \frac{m}{k} a$$

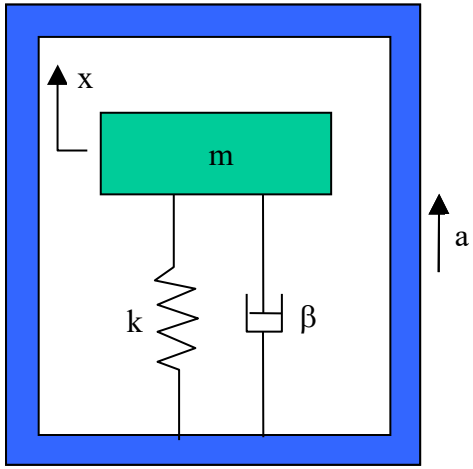

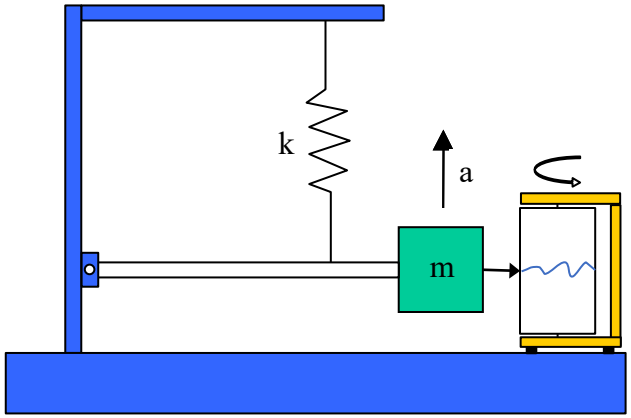

Example: the seismograph

Which Transfer Function?

An accelerometer can be described as a mass-spring system:

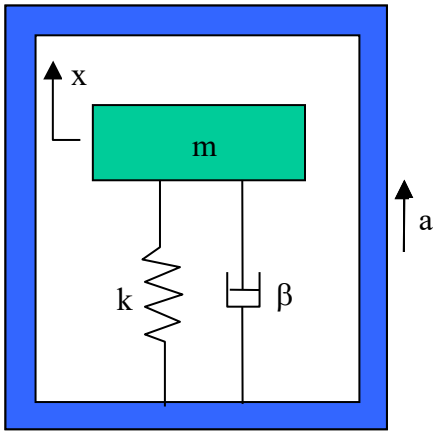

$$\mathrm{ma} = m\ddot{x} + \beta\dot{x} + kx$$

$\mathrm{m} = masse$
$\beta = damping$
$k = spring\ constant$

The natural frequency is:

$$f_n = \frac{1}{2\pi}\sqrt{\frac{k}{m}}$$

The quality factor

$$Q = \frac{\sqrt{mk}}{\beta}$$

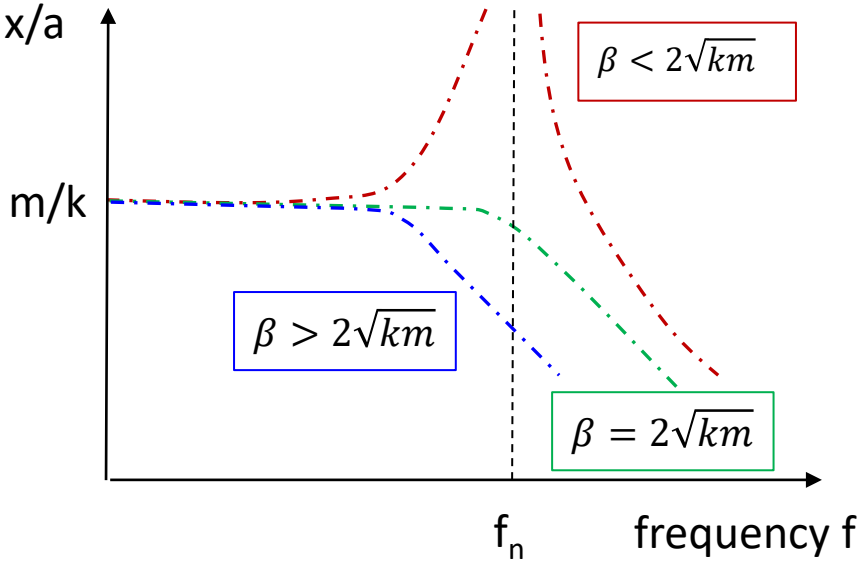

Measurement Principle

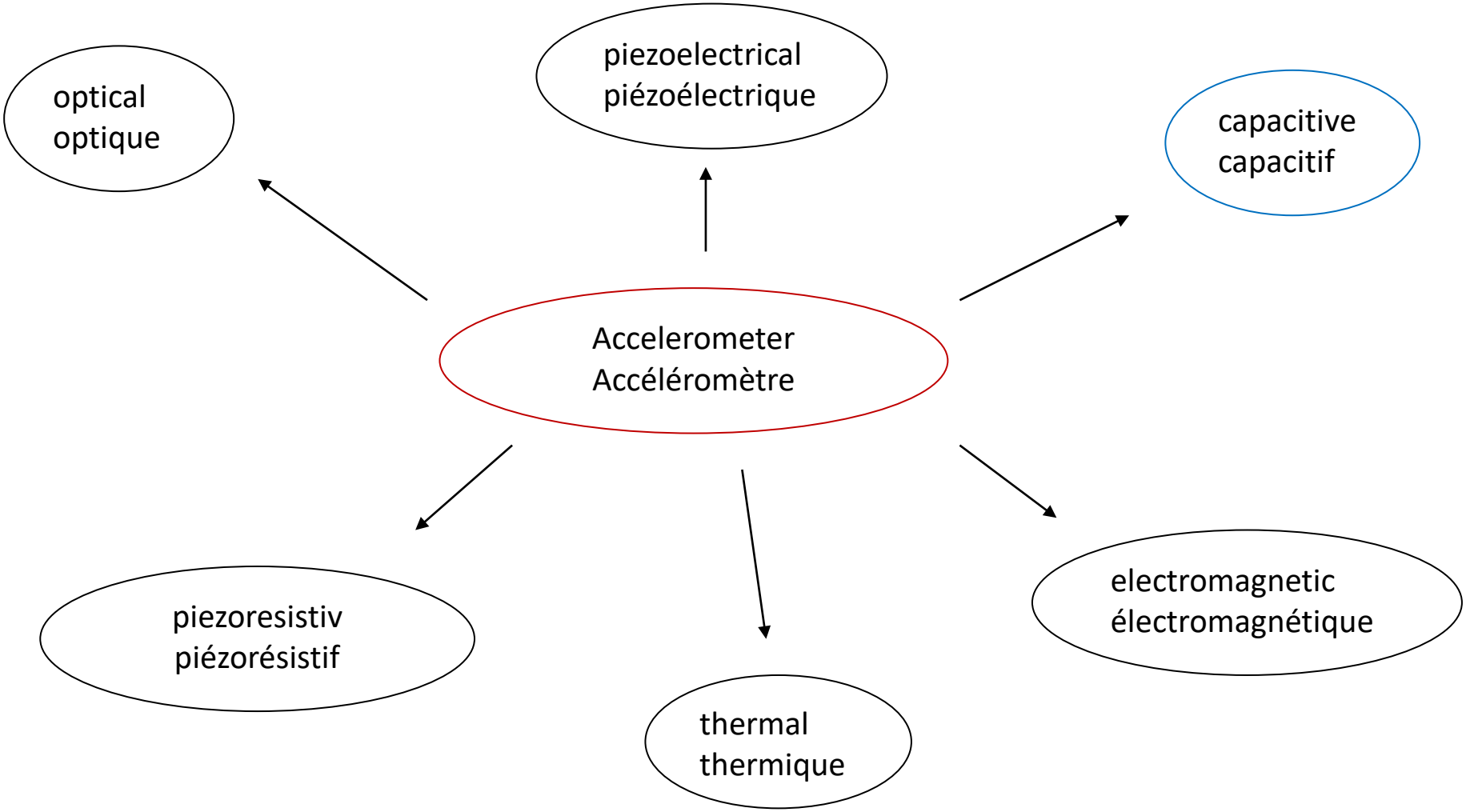

The simplest: the rolling Ball tilt Switch

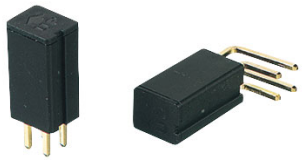

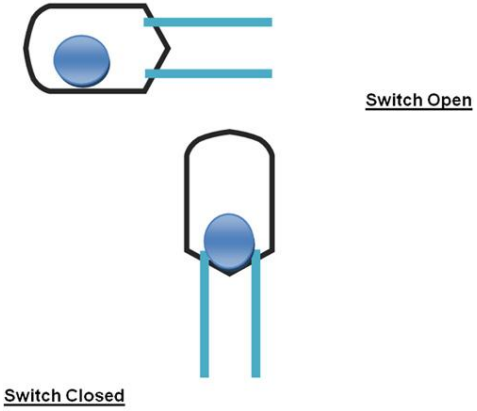

Contact rating:	25mA at 240 VDC
Contact resistance (Ohms):	10
Differential angle (deg.):	10
Operating temperature (°C):	-25 +70
Contacts:	Gold plated
Case material:	Polyamide - UL94V-0
Features:	Non-mercury contacts

Not a smart sensor!

1.1 Consumer Accelerometers

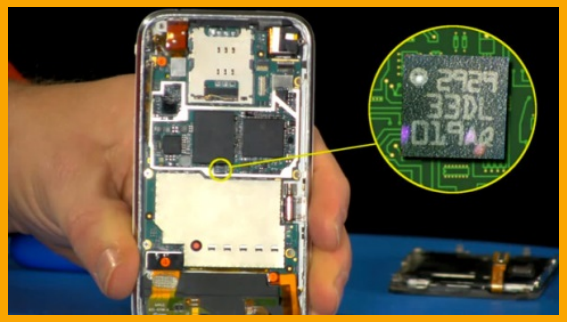

Four Accelerometers Markets

1) Consumer Accelerometers
- Price
- Size

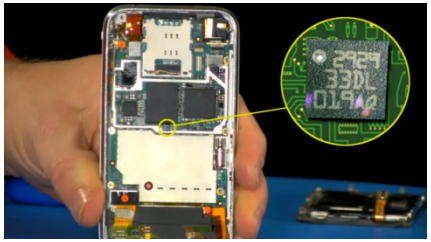

2) High-End Accelerometers
- Long term stability

3) Geoseismic Accelerometers
- Noise

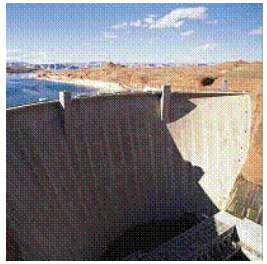

4) Accelerometers for vibration measurements
- Bandwidth

1) Consumer Accelerometers

- car safety (airbag triggering, stabilisation,…)
- game consoles
- smartphone (portrait-landscape screen)
- hard disk protection...

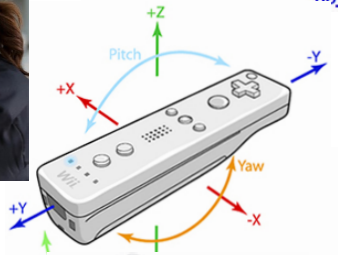

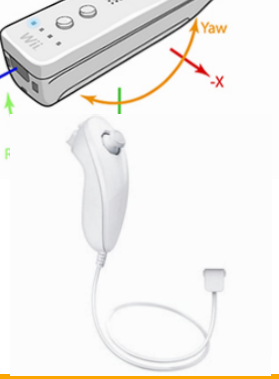

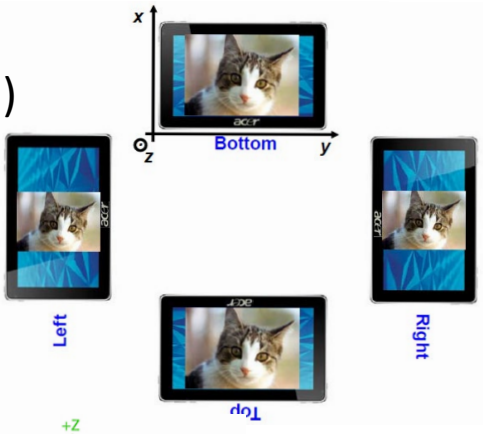

When the mobile device is in use, data is read and written by the read-write head.

When movement is detected, the read-write head is immediately retracted.

Upon impact, the retracted read-write head does not scratch the hard disk. Precious data is protected.
(source Fujitsu)

Airbag for Smartphone

Fall Monitor System

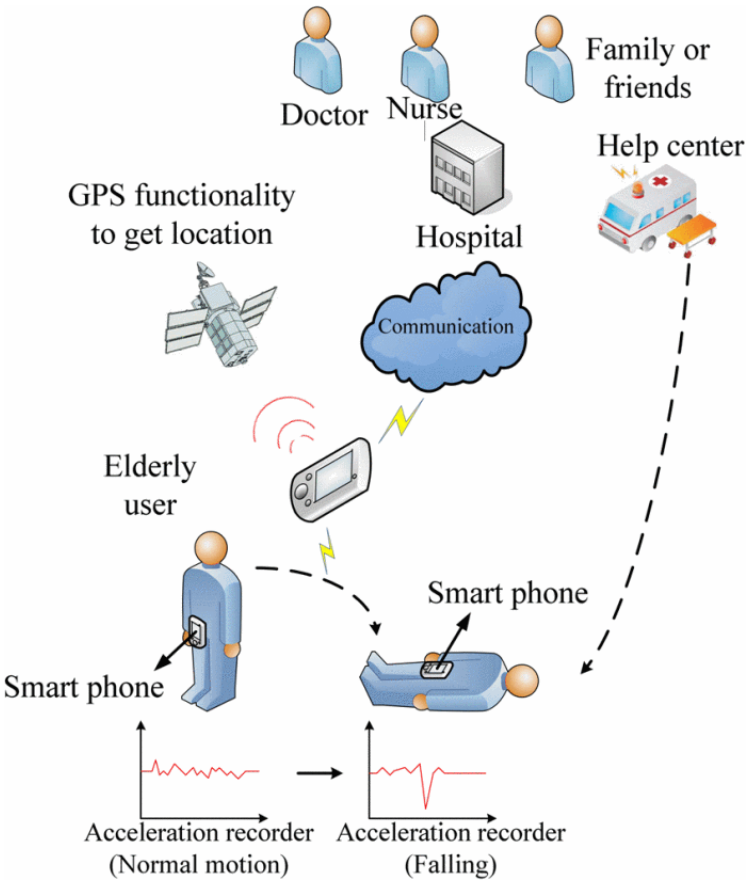

Falling Person Acceleration

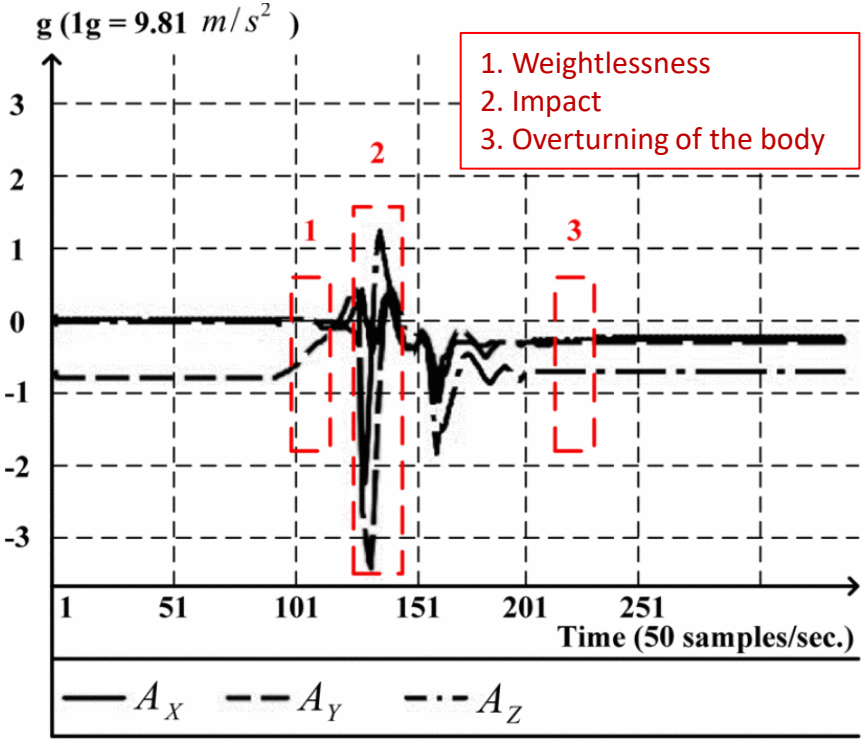

All over in…150ms

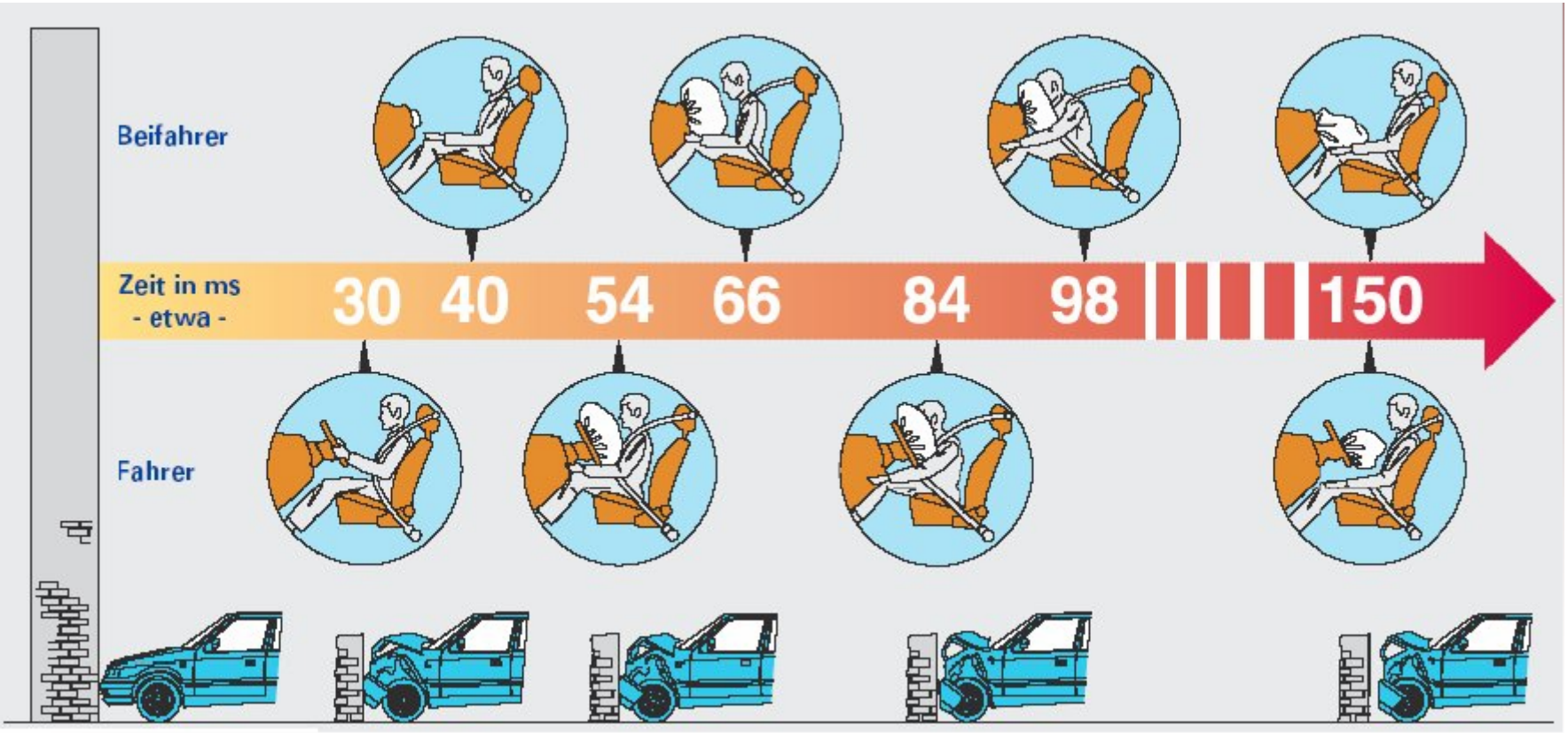

Consumer Accelerometers

- Thin- SOI or surface micromachined
- Small housing (<3x3x1mm)
- Measurement range from ± 1g to ± 50g
- Multi-axis sensors
- Digital output signal
- Very low cost
- Low power consumption

Murata (2x2x0.95)

ST (2x2x1 mm)

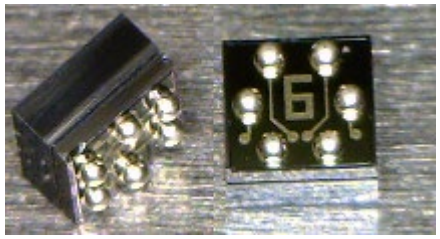

mCube (1.1x1.1x0.7 mm)

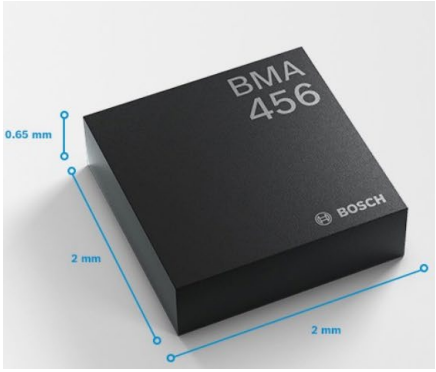

Bosch (2 x 2 x 0.65mm)

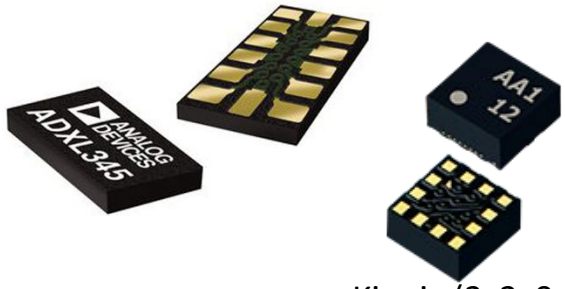

Kionix (2x2x0.6mm)

NXP (3x3x1mm)

Variable capacitive Sensor

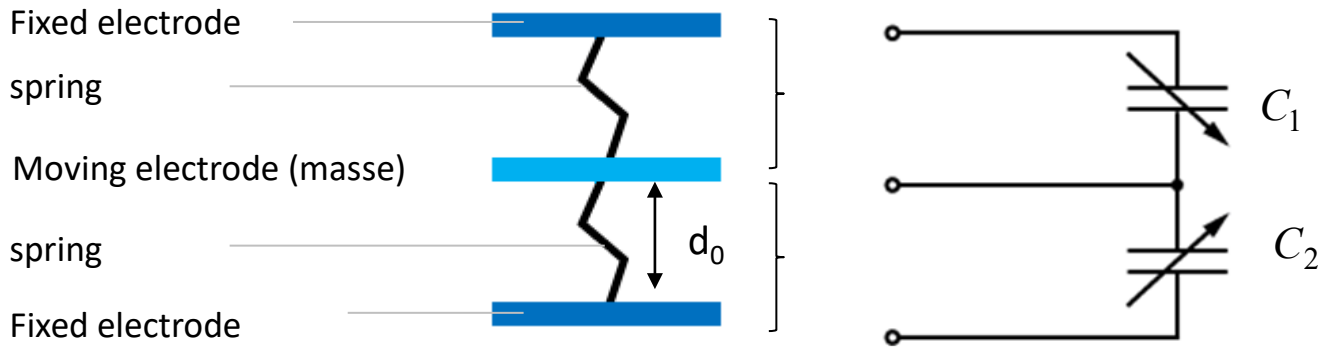

- An acceleration will move the mass:

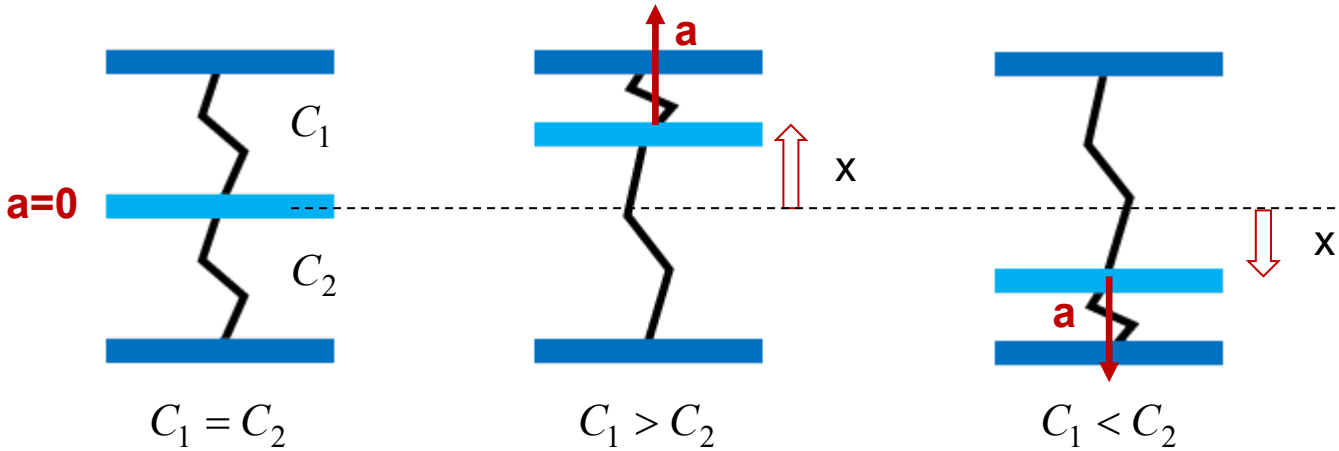

High-End Accelerometers, Fabrication Technologies

High mass → high sensitivity $x = \frac{m}{k} a$

Surface Micromachining	Thin-SOI (Silicon On Insulator)	Bulk-Micromachining	Thick-SOI (Silicon On Insulator)
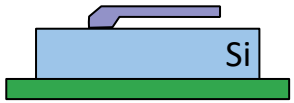	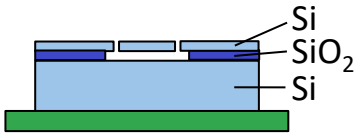	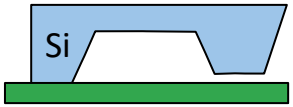	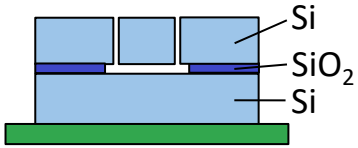
thin mass (2-10µm) Large bandwidth		Thick mass (200-500µm) Better resolution Small noise	
Low-end applications		High-Stability Applications	

In-Plane Detection

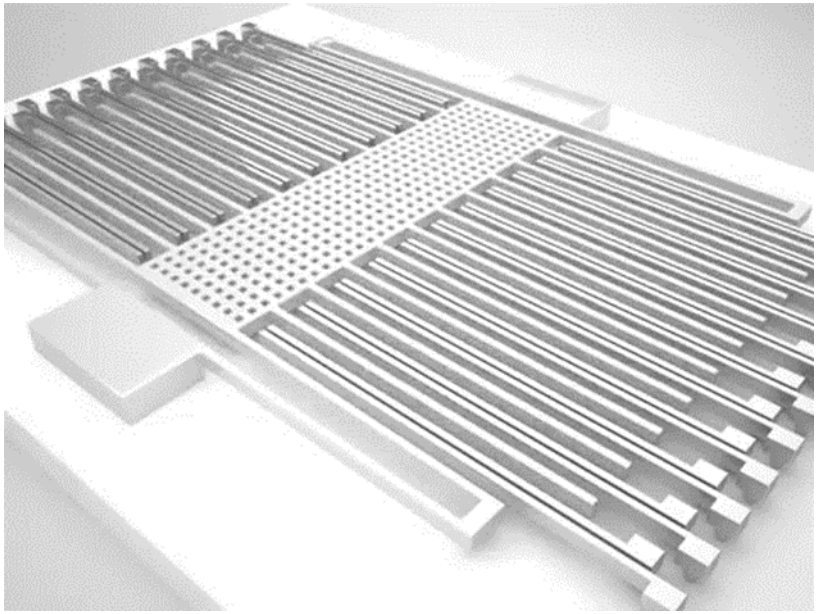

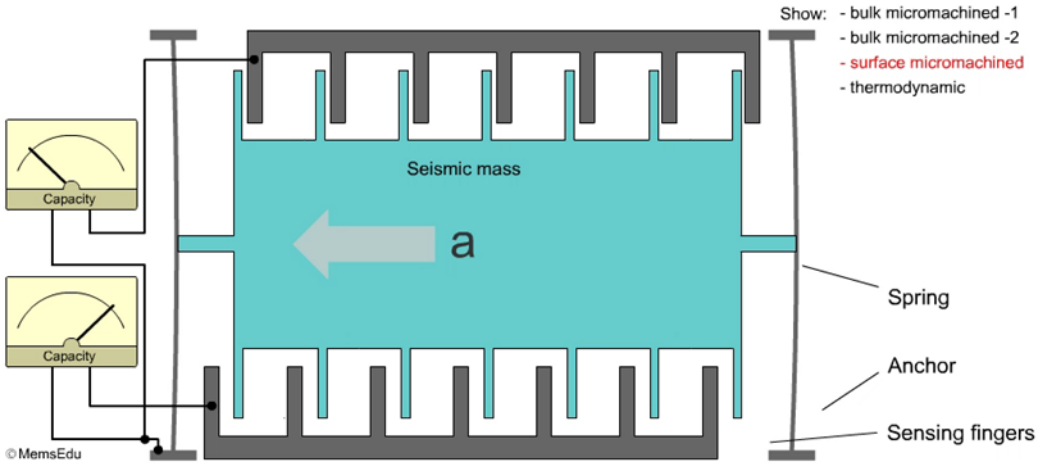

In-Plane Detection

- The movable electrode of the seismic mass together with its fixed counter-electrode forms a parallel plane capacitor.
- The external acceleration (a) changes the initial gap (d_0) and the corresponding capacitance.

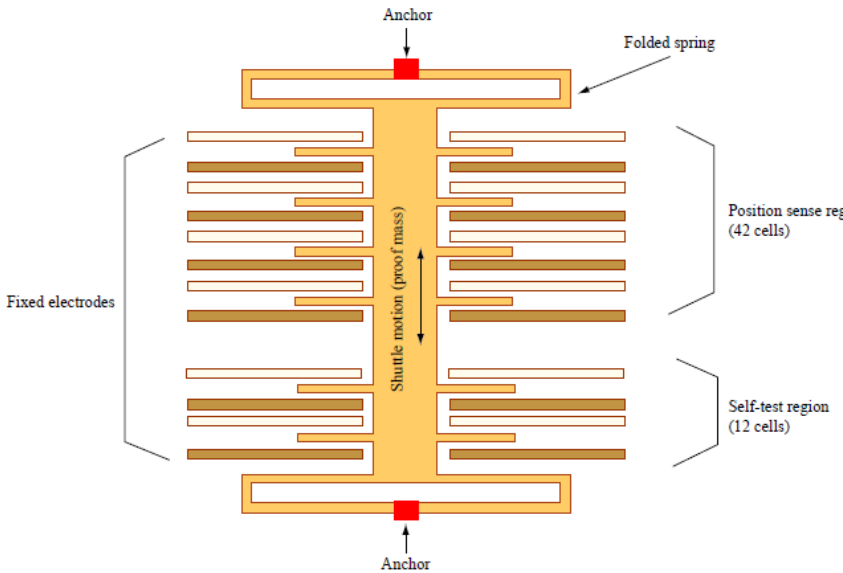

x=mass displacement

$$\frac{C_1 - C_2}{C_1 + C_2} \sim \frac{x}{d_0} \sim a$$

d_0=initial gap (typ: 1.3µm)

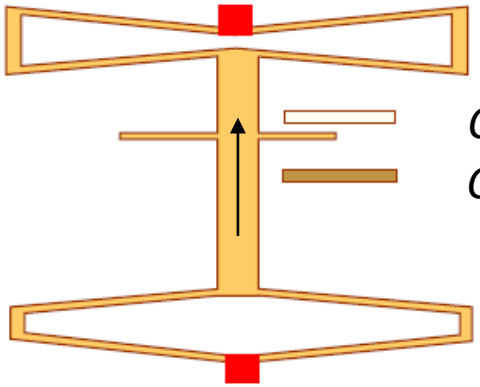

$C_1 + \Delta C$
$C_2 - \Delta C$

2D Accelerometer

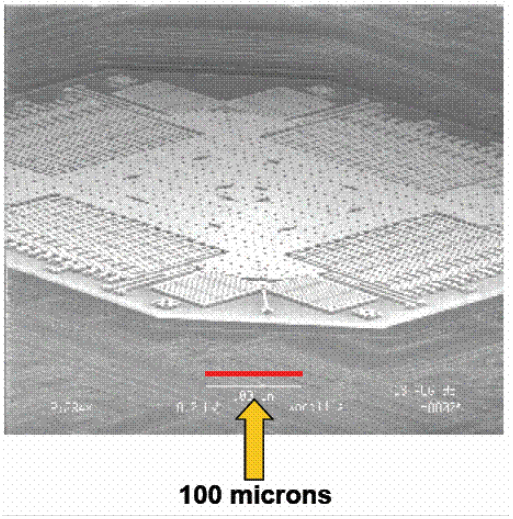

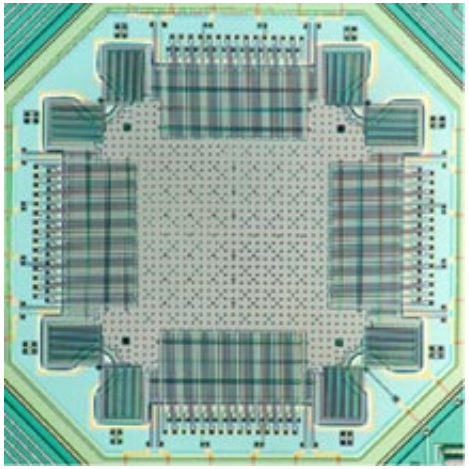

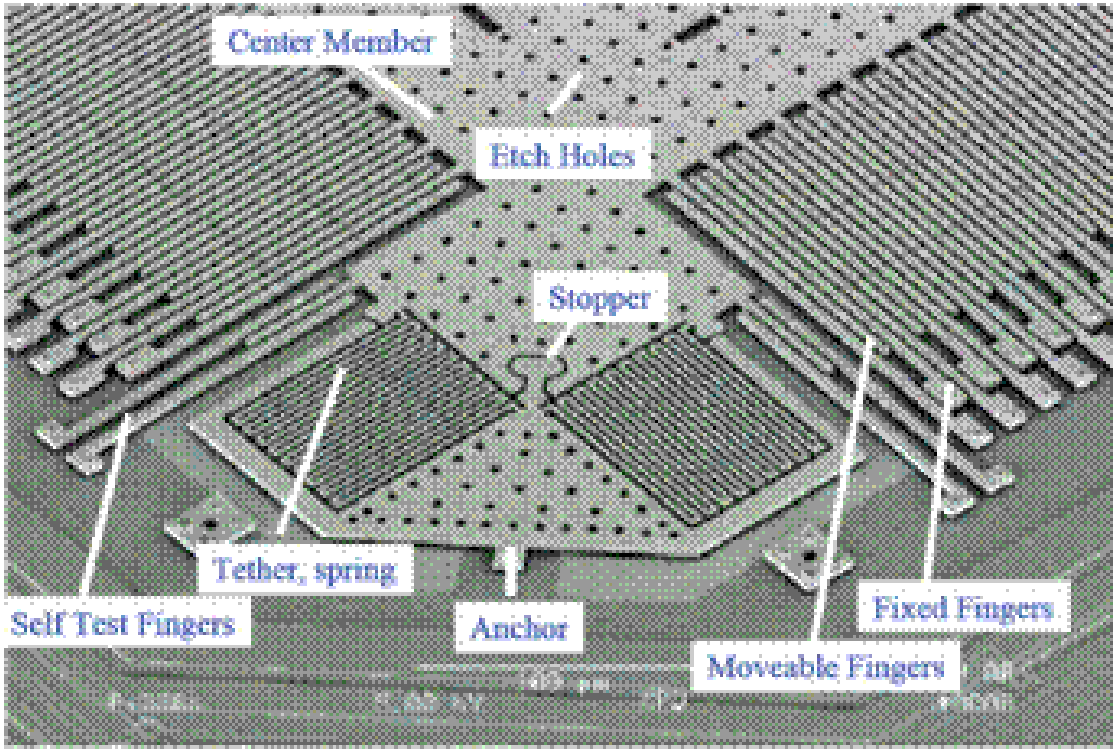

Out of Plane Accelerometer

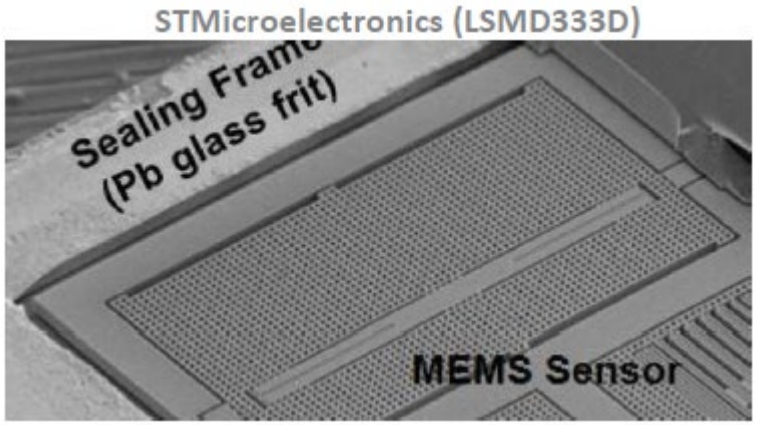

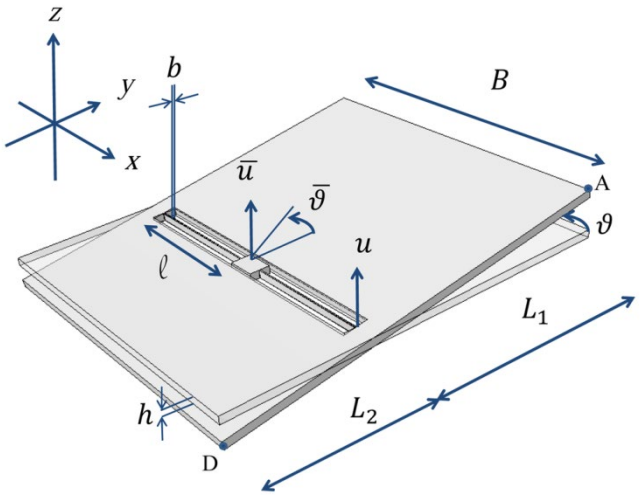

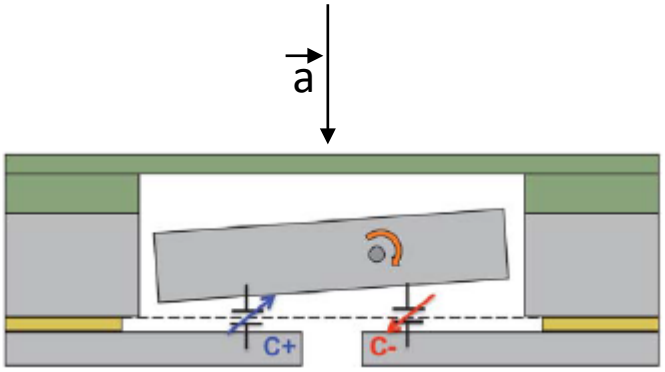

3D Accelerometer

- A single structure/mass on a chip:

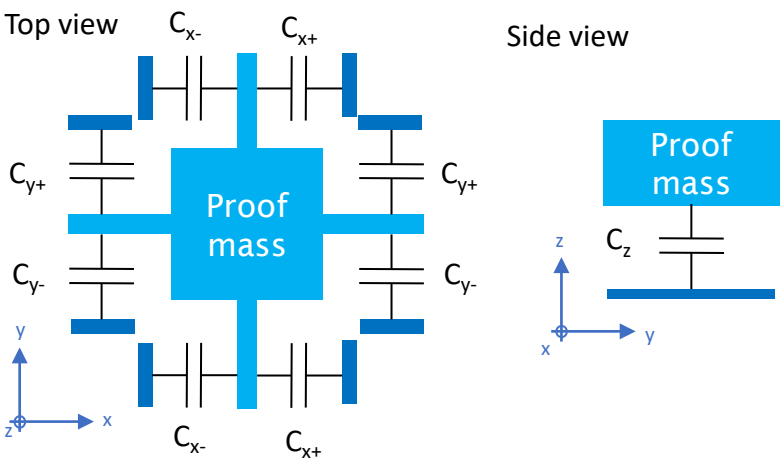

- 2 or 3 independent structures on a single chip:

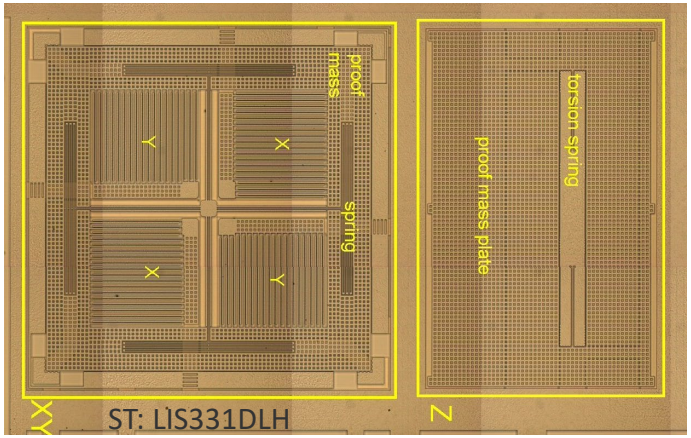

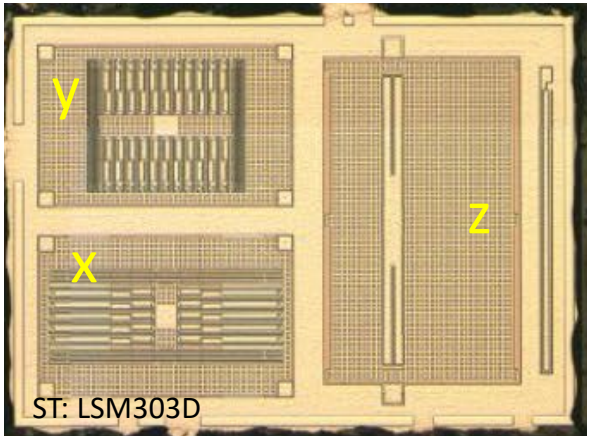

Differential Capacitor Readout

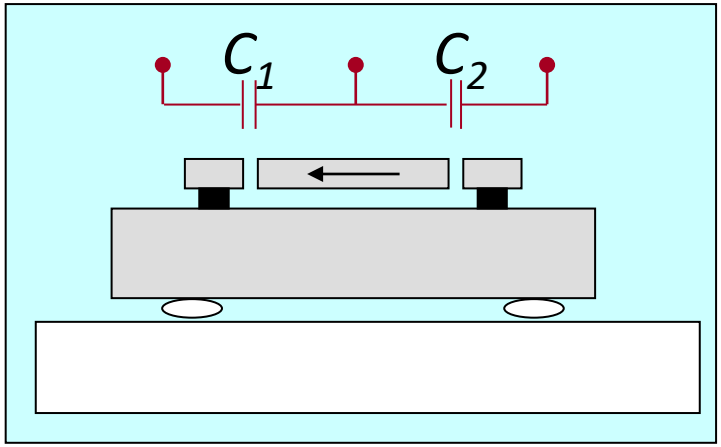

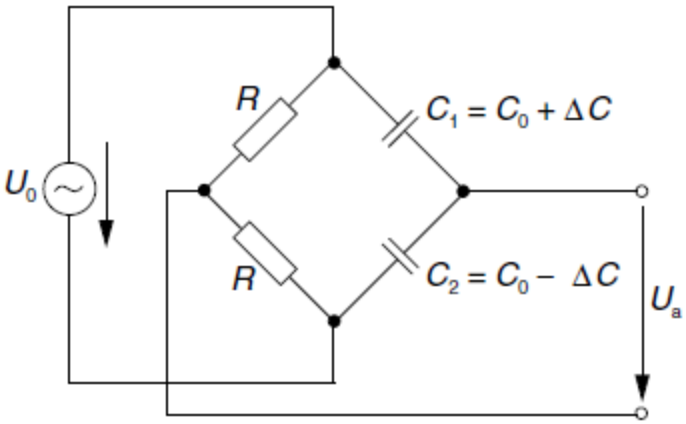

C_0 *:* capacitance when the mass is centered
ΔC : capacitive change

d_0 *:* gap
x *:* gap change

$$C_1 = C_0 + \Delta C = \frac{\varepsilon_0 \varepsilon_r A}{d_0 - x}$$

$$C_2 = C_0 - \Delta C = \frac{\varepsilon_0 \varepsilon_r A}{d_0 + x}$$

Exercise 1.1

Capacitive Accelerometer with Bridge Circuit Readout

a) Calculate the output voltage U_a of a bridge circuit as a function of the change in capacitance for $\Delta C = 0$ and $\Delta C = 1$ pF, when the quiescent capacitance is $C_0 = 10$pF and the supply voltage is $U_0 = 5$ V.

a) Calculez la tension de sortie U_a d'un montage en pont en fonction du changement de capacité pour $\Delta C = 0$ et $\Delta C = 1$ pF, lorsque la capacité de repos est de $C_0 = 10$pF et la tension d'alimentation est de $U_0 = 5$ V.

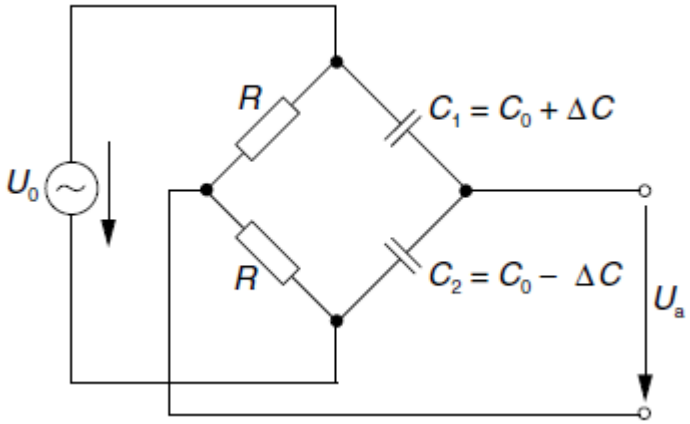

b) Demonstrate that the voltage U_a is proportional to the displacement x.

b) Démonter que la tension U_a est proportionnelle au déplacement x.

Voltage Amplifier

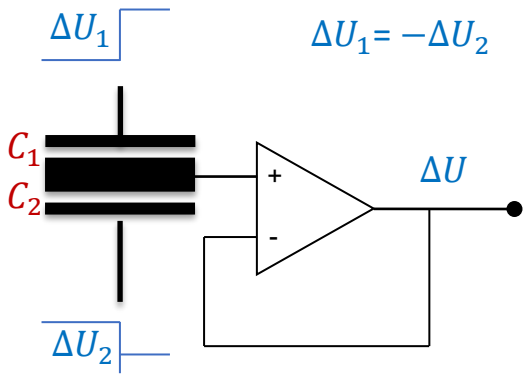

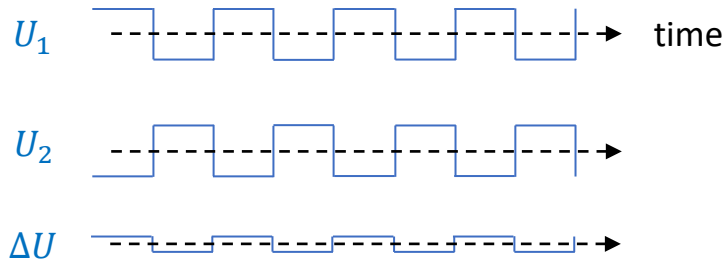

$$\boxed{\Delta U = \frac{C_1 - C_2}{C_1 + C_2} \cdot \Delta U_1}$$

$$C_1 = \frac{\varepsilon A}{d_0 - x} \; ; \; C_2 = \frac{\varepsilon A}{d_0 + x} \Rightarrow \Delta U = \frac{x}{d_0} \Delta U_1$$

The presence of parasitic capacitors leads to:

- electrostatic forces on the test mass
- a non-linearity error

Charge Amplifier

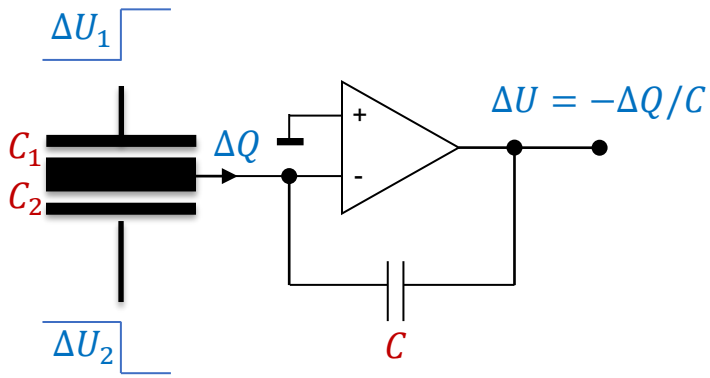

$$\Delta U = \frac{C_1 - C_2}{C} \cdot \Delta U_1$$

- Non-linearity error is no longer dependent on parasitic capacitances.
- However, when the mass is not centered, the generated charges create an electrostatic forces on the mass.

Accelerometer Packaging Size

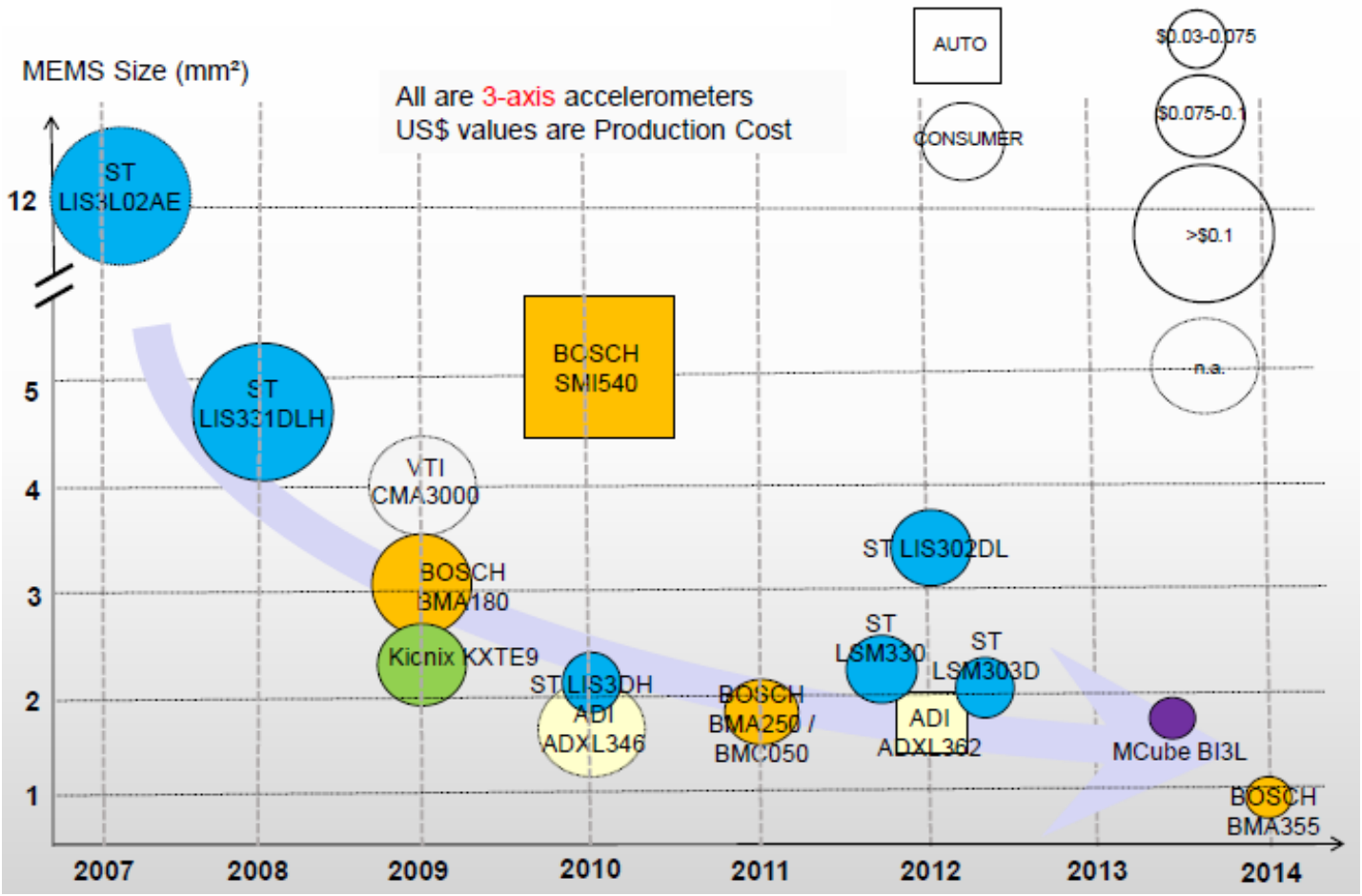

Compact Packaging Design

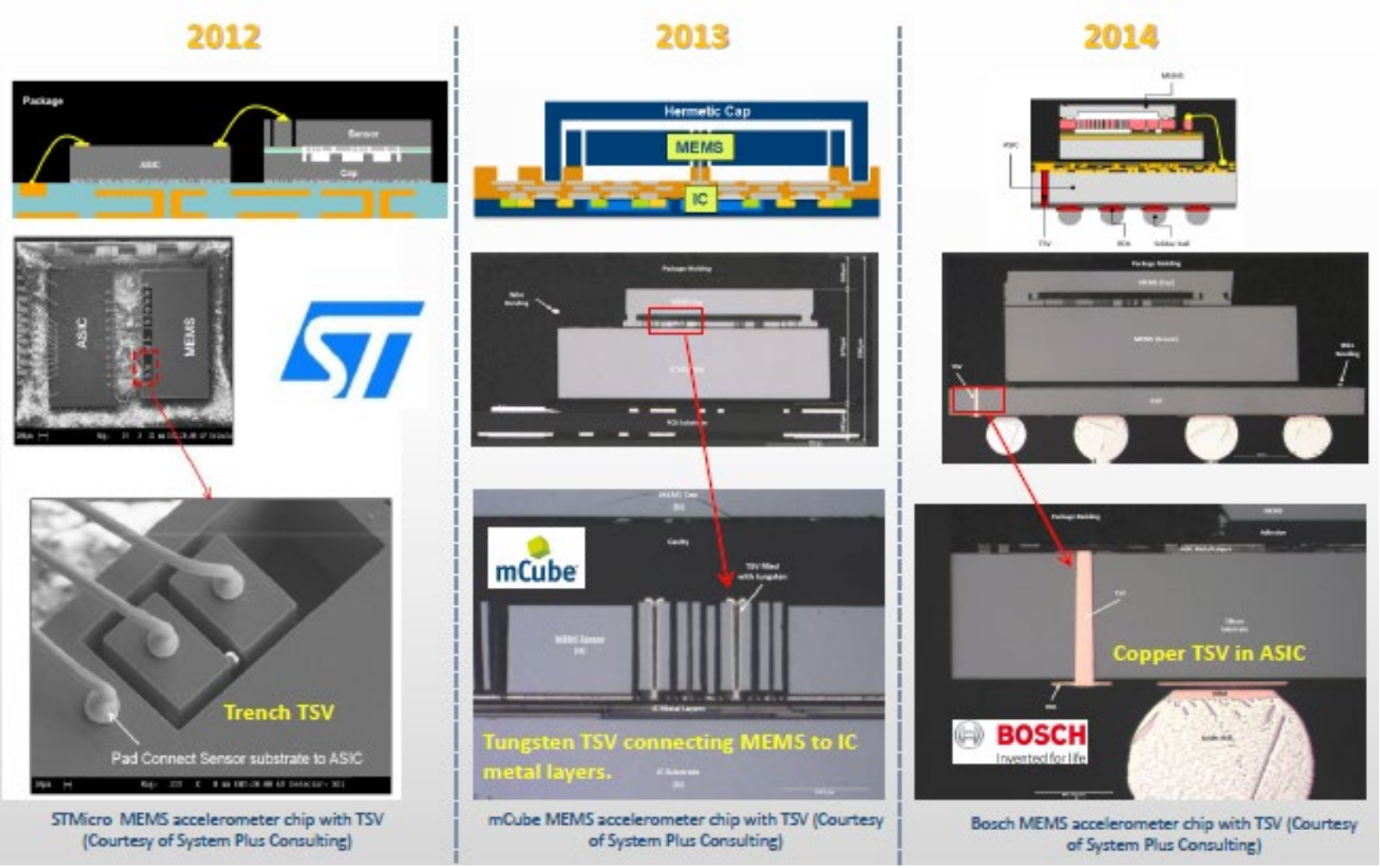

Embedded Features

Example: Bosch BMA 400 accelerometer:

- Pedometer
- Activity detection (walking, running, standing still)
- Orientation
- Tap, double tap
- FIFO (1kB)
- Data timestamping
- Free-fall detection
- Auto-wake-up

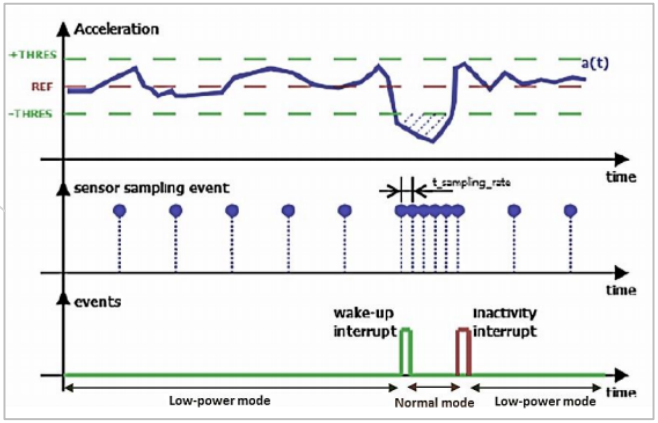

Embedded Features

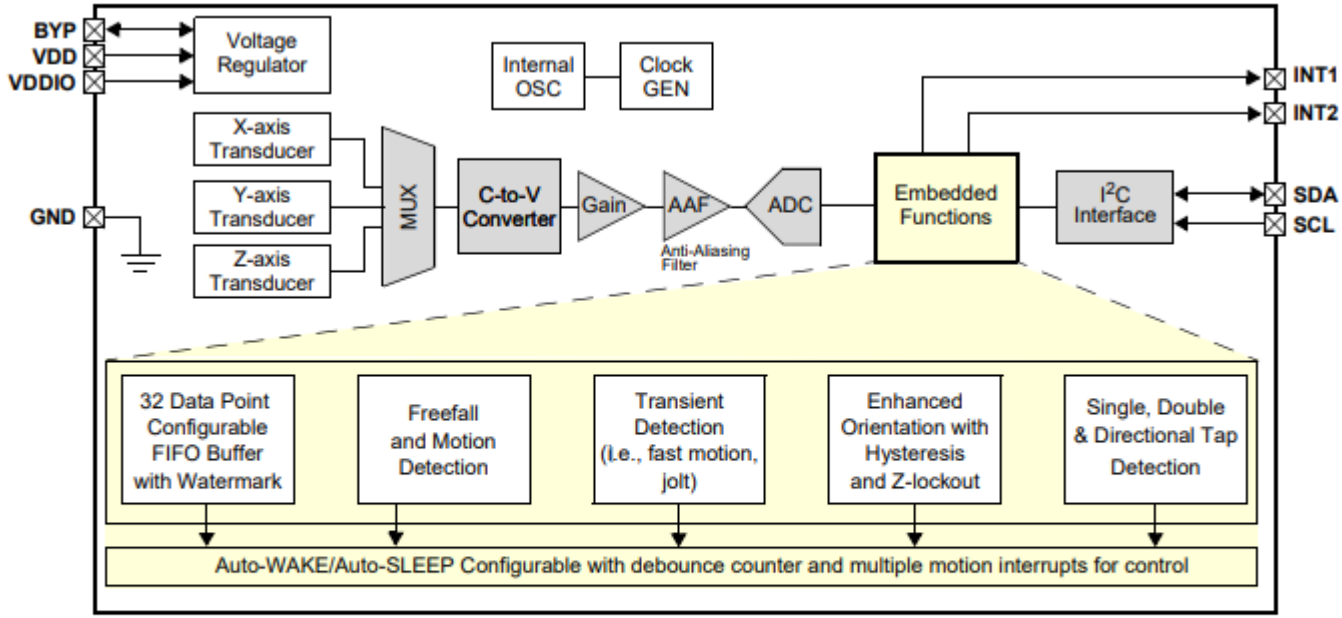

MODE Options
Low Power
Low Noise + Power
High Resolution
Normal

ACTIVE Mode **WAKE** ⟷ Auto-WAKE/SLEEP ⟷ ACTIVE Mode **SLEEP**

MODE Options
Low Power
Low Noise + Power
High Resolution
Normal

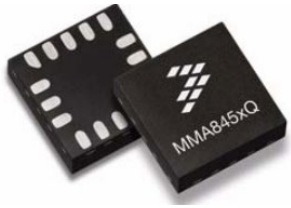

https://www.nxp.com/docs/en/data-sheet/MMA8652FC.pdf

Summary:

1.1 Customer Accelerometers

Typical applications: smartphone, IoT, wearable devices

The important characteristics for this market are:

- Price (<1CHF)
- Size (Typ. 2x2mm)
- Current consumption (<100µA)

For this reason, they are manufactured by surface micromachining or with a thin SOI wafer.

The package is extremely compact, and the chips are often stacked on top of each other.

Cheap does not mean unreliable!

Exercise 1.2

MEMS Accelerometer Design

The acceleration sensor below is given:

1) What is the spring constant k of all 4 springs together?
2) How much force is exerted on the mass with a 1g acceleration?
3) How much voltage U is needed to compensate for this force?

Soit l'accéléromètre ci-dessous:

1) Quelle est la constante ressort k de l'ensemble des 4 ressorts.
2) Quelle est la force qui s'exerce sur la masse si l'accélération est de 1g?
3) Quelle tension U est nécessaire pour compenser cette force?

$$F_{pull} = \frac{1}{2}\frac{\varepsilon_0 \varepsilon_r A}{d^2} U^2 = mg$$

Gap = 2µm
Mass thickness = 2µm
Square holes 5x5µm

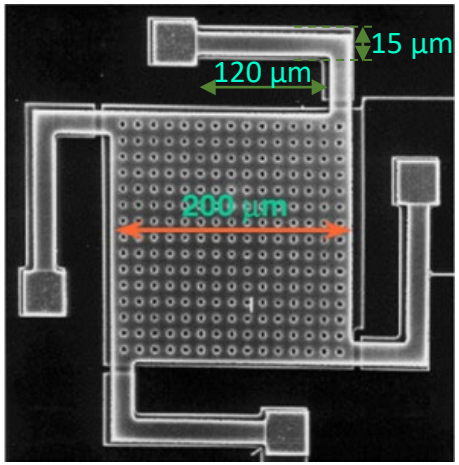

distance inter-électrode = 2µm
épaisseur de la masse = 2µm
trous carrés de 5x5µm

Exercise 1.2

MEMS Accelerometer Design

4) This sensor is encapsulated under vacuum. Draw the transfer function schematically. Do you see any disadvantage to this sensor?

5) Why are there holes in the mass? Does this have an influence on the damping?

4) Ce capteur est encapsulé sous vide. Dessinez schématiquement la fonction de transfert. Est ce que vous voyez un inconvénient à ce capteur?

5) Pourquoi est ce qu'il y a des trous dans la masse? Quel est l'effet sur l'amortissement?

Silicon Spring Design

- Rectangular beam, deflection at the end of the beam.

Applied force	Frei end	Guided end	Fixed End
	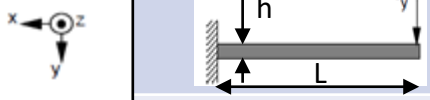		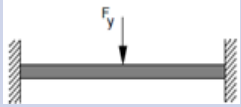
F_x	$x = \frac{F_x L}{Ehw}$	$x = \frac{F_x L}{Ehw}$	$x = \frac{F_x L}{Ehw}$
F_y	$y = 4\frac{F_y}{Ew}\frac{L^3}{h^3}$	$\boxed{y = \frac{F_y}{Ew}\frac{L^3}{h^3}}$	$y = \frac{1}{16}\frac{F_y}{Ew}\frac{L^3}{h^3}$
F_z	$z = 4\frac{F_z}{Eh}\frac{L^3}{w^3}$	$z = \frac{F_z}{Eh}\frac{L^3}{w^3}$	$z = \frac{1}{16}\frac{F_z}{Eh}\frac{L^3}{w^3}$

L: length
w: width
h: height
E: Young's modulus

Example:

Comparison with Hook's law: $F_y = k_y y$

Spring constant of the rectangular beam: $\boxed{k_y = \frac{Ewh^3}{L^3}}$

http://www.imtek.de/mikroaktorik/content/upload/vorlesung/2006/tag_2_kammaktor-_biegebalken_1.pdf

Exercise 1.3

Embedded Functionalities

Look at the ST application note AN5192:

Embedded Functionalities (p. 38 – 56)

1. What is an interrupt?
2. How is free-fall detected? What parameters (registers) can you adapt for your application? What does it change?
3. What is a tap?
4. How would you personally detect a single tap, resp. a double tap? (do not look in the AN)
5. How is proceeding ST to detect single, resp. double tap? What sensor is used? Along which direction? How do you make sure that a rebound is not detected?

Consultez la note d'application ST AN5192 :

Fonctionnalités embarquées (p. 38 - 56)

1. Qu'est-ce qu'un « interrupt »? Comment la chute libre est-elle détectée ? Quels paramètres (registres) pouvez-vous adapter pour votre application ? Qu'est-ce qui est modifié?
2. Qu'est-ce qu'un « tap » ?
3. Comment détecteriez-vous personnellement un tap simple, resp. un double tap ? (ne pas regarder dans l'AN)
4. Qu'est-ce que ST utilise pour détecter un tap simple, resp. double ? Quel capteur est utilisé ? Dans quelle direction ? Comment s'assurer qu'un rebond n'est pas détecté ?

Exercise 1.3

Embedded Functionalities

6. Do you have an interrupt to detect wrist tilt?
7. If not, how could you detect such an event?

Output Data (p. 28-31)

8. The acceleration is coded over how many bits?
9. Give the output for an acceleration of 500m*g* (resp. -500m*g*) for a ±2*g* sensor

6. Disposez-vous d'une interruption pour détecter l'inclinaison du poignet ?
7. Si non, comment pourriez-vous détecter un tel événement ?

Données de sortie (p. 28-31)

6. L'accélération est codée sur combien de bits ?
7. Donnez la valeur de sortie obtenue pour une accélération de 500 m*g* *(resp.* -500 m*g)* pour un capteur de ± 2*g*.

Smart Sensors

2. Gyroscopes

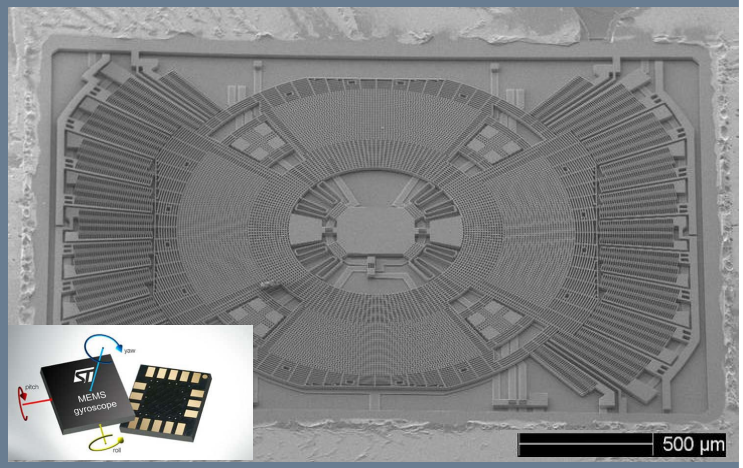

What is a Gyroscope?

- A gyroscope measures the rate of rotation of an object, i.e. an angular velocity around an axis.

$$\Omega = \frac{d\theta}{dt}$$

angular velocity Ω
= angle over time

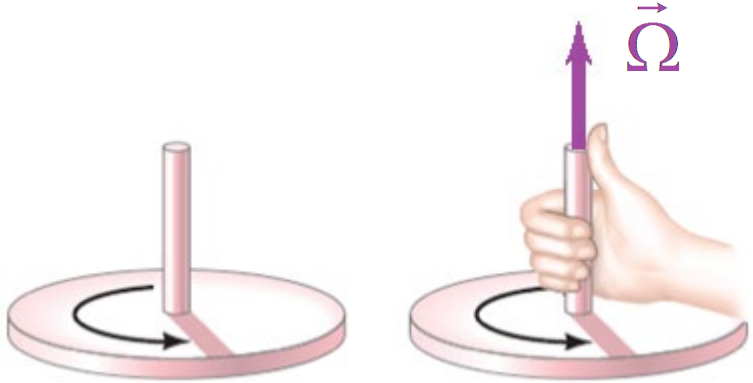

- unit: rad/s, dps (degrees per second)

Vestibular System: semi-circular Channels

- A liquid (endolymph) in a tube system serves as an inertial mass.
- This stimulus is detected by hair cells in a cupula.

Rotation acceleration:

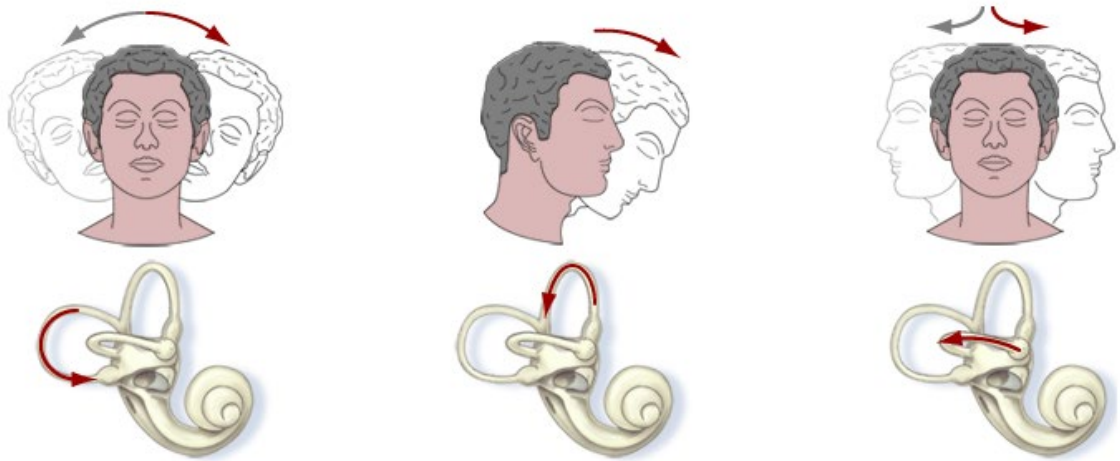

Semi-circular channels

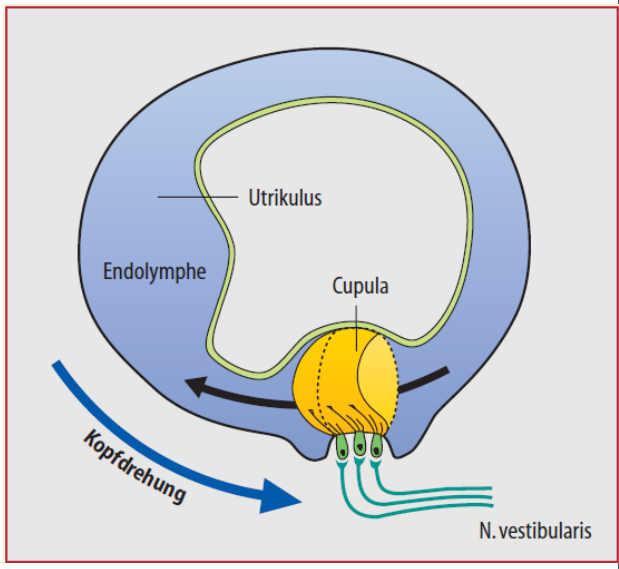

Gyroscope Applications

Navigation

- For regions without GPS (tunnels, urban canyons)

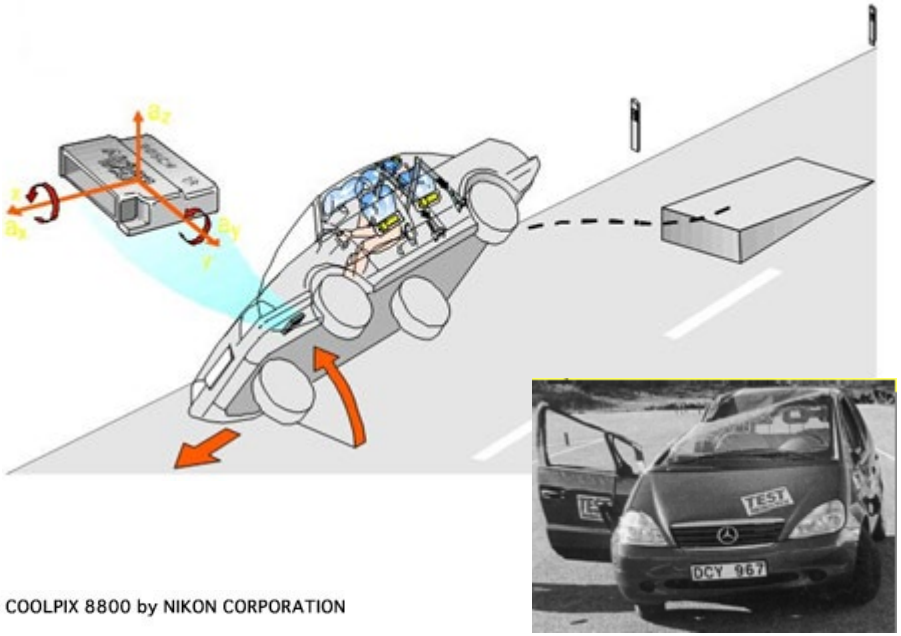

Automobile Industry

- active safety equipment (e.g. ESP)
- navigation
- to measure the rotation speed or for rollover detection

Photography

- Image stabilization

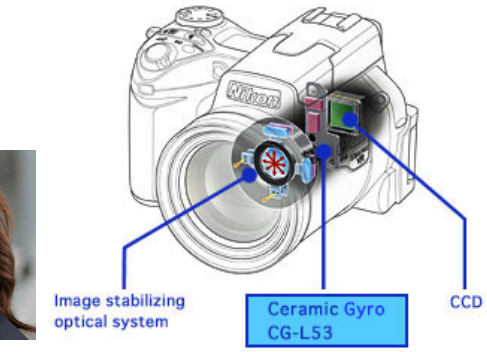

Gaming

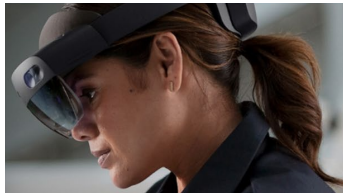

Automotive Navigation without GPS

- Dead reckoning is useful as a backup solution when GPS signals are not detectable (tunnels, car parks, urban canyons, etc.).

- Principle: The position is calculated from the distance travelled and the direction of travel, which are continuously updated.

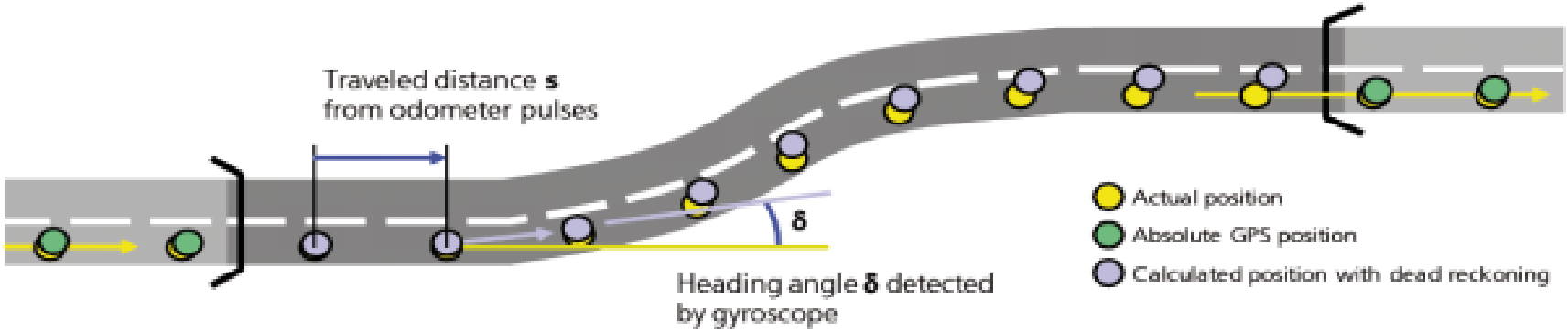

Automotive: yaw Sensor

Optical Image Stabilization (OIS)

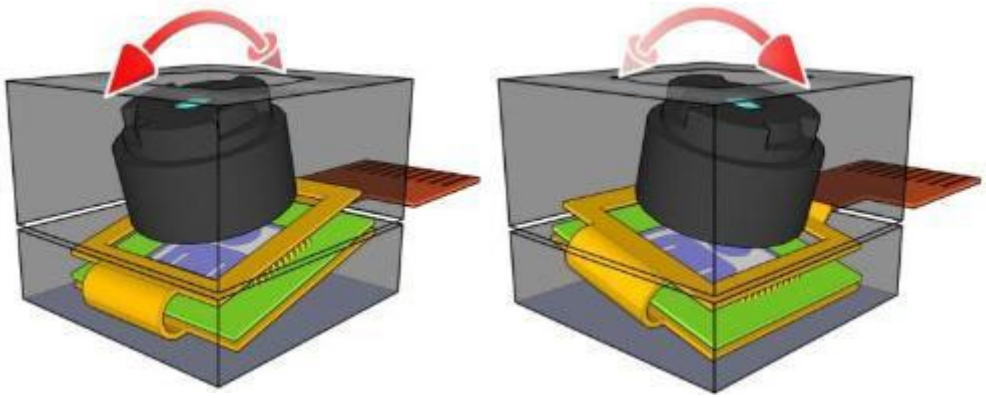

Image stabilisation

The pitch and yaw angles are measured with a gyroscope and compensated by an actuator (SMA wire).

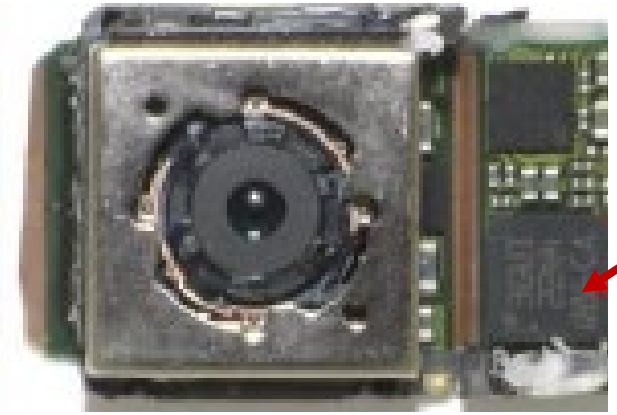

MEMS Gyroscope

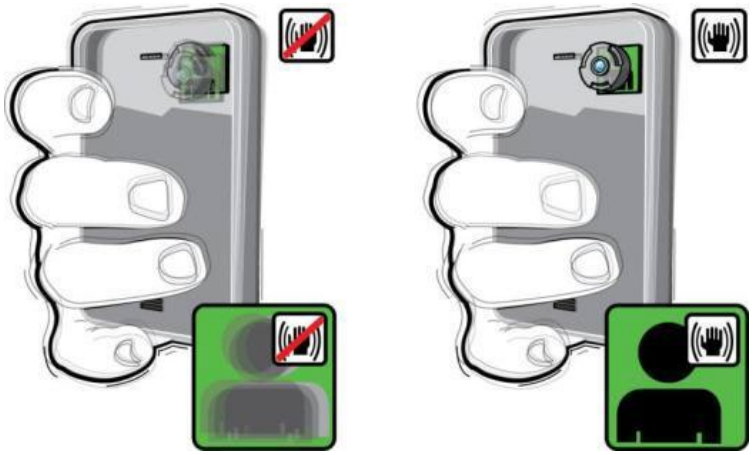

Specifications vs Applications

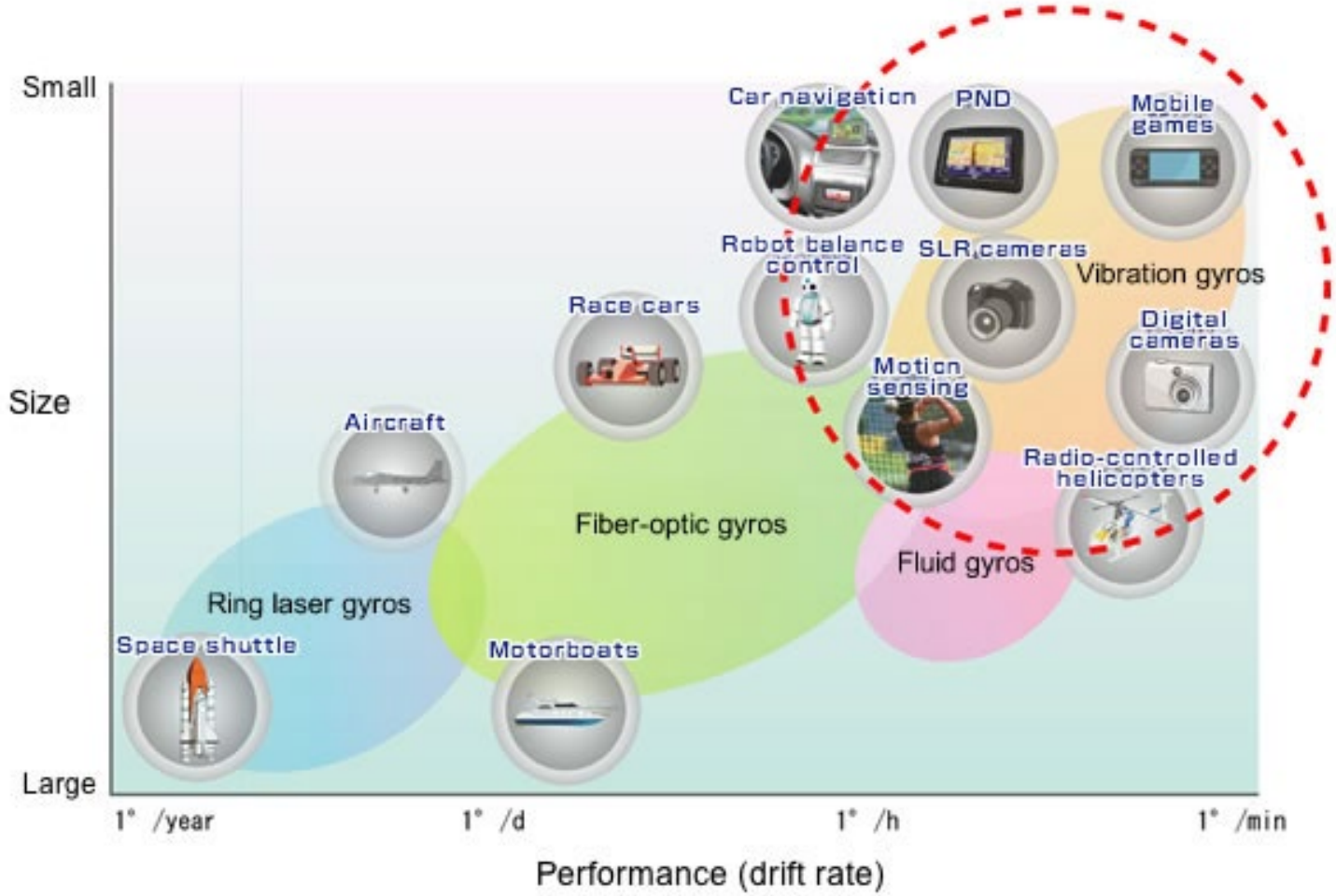

https://www5.epsondevice.com/en/information/technical_info/gyro/

Measurement Principle

0:00 - 0:40

- **Sagnac Effect**, optical interferences due to a rotation movement

- **Coriolis force,** observed on a linearly moving system. Most MEMS gyroscopes are using this force:

$$\vec{F}_c = 2m(\vec{v} \times \vec{\Omega})$$

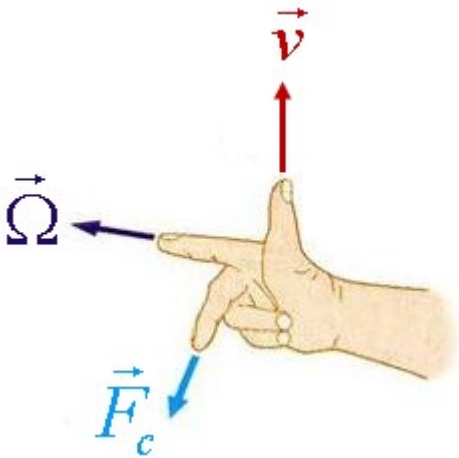

F_c: Coriolis force

m: mass

v: linear speed of the mass

Ω: angular velocity

Gyroscope: Measurement Principle

- Mechanical Gyroscopes are based on Coriolis force.
- Usually, the mass is moved harmonically thanks to a piezoelectric or electrostatic actuator.

$$|\vec{v}| = v_o \cos(\omega t)$$

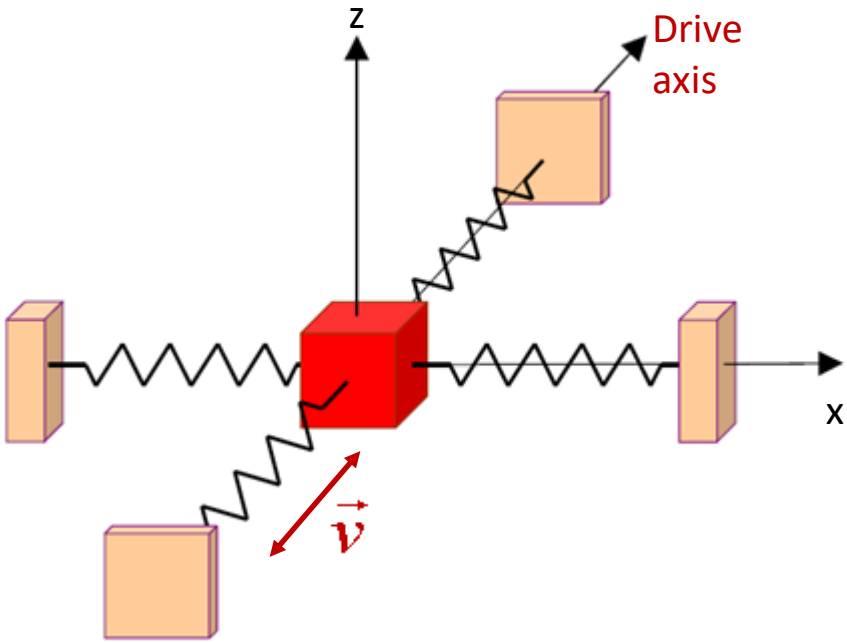

- First, the mass is oscillating along the drive axis.
- There is no movement along the x direction.

Gyroscope: Measurement Principle

- When the device is rotated around the z-axis, the vibration energy along the drive axis (y) is coupled in the x-direction.
- The vibration in the x direction (= sense axis) is then measured.
- It is representative of the angular velocity Ω.

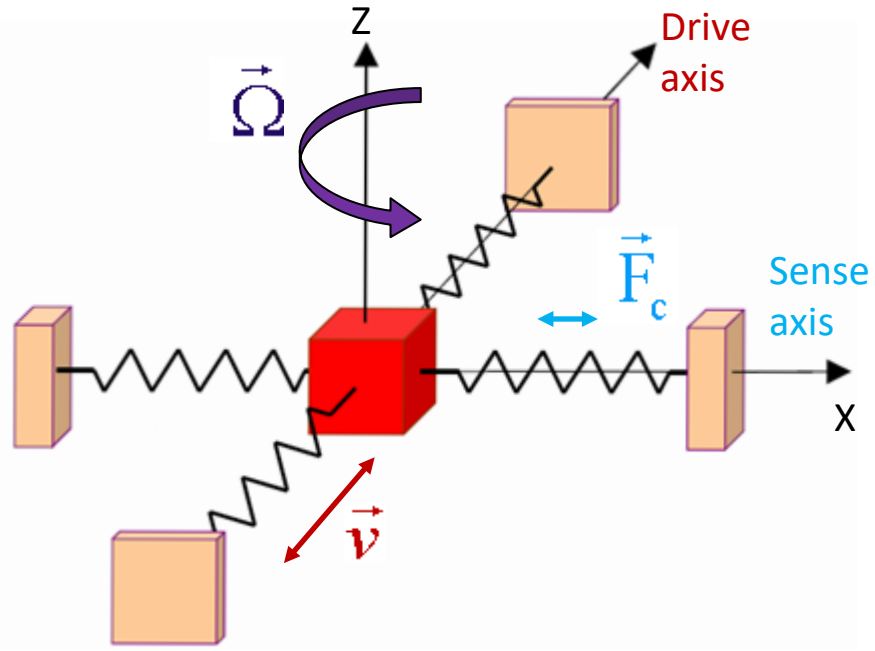

$$\vec{F}_c = 2m(\vec{v} \times \vec{\Omega}) \longrightarrow \left|\vec{F}_c\right| = 2m(v_o \cos(\omega t) \cdot \left|\vec{\Omega}\right|)$$

Exercise 2.1

Coriolis Force Calculation

- The drive movement is x_0=1µm with f_0=10kHz.
- The mass is 0.6 µg
- The angular velocity is: 2π rad/s= 360 °/s

- What is the maximum Coriolis force $|F_c|$ =?

- Le mouvement de „Drive“ : x_0=1µm avec f_0=10kHz,
- La masse est de 0.6 µg
- La vitesse de rotation est : 2π rad/s= 360 °/s

- Quelle est la force de Coriolis maximale $|F_c|$ =?

The whole Gyroscope Family

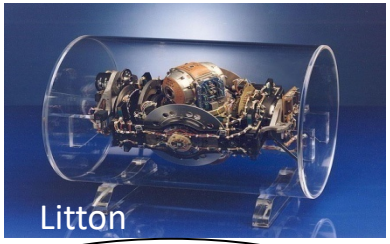

Rotary Gyroscope

electrodynamic

Gyroscope

optical

RLG

FOG

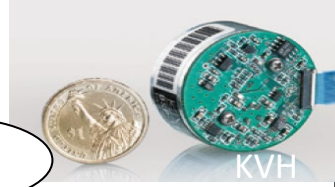

capacitive

piezoelectric

1) vibrating linearly (linear-linear)

2) vibrating in rotation (rotation-rotation)

3) in form of a glass wine or ring

4) Tuning fork

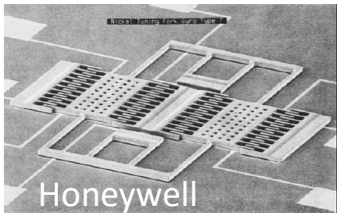

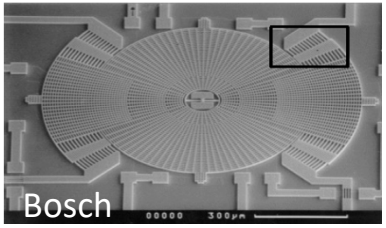

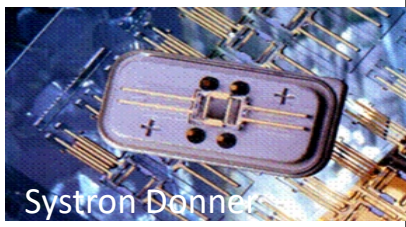

Electrostatic Comb-drives

In a MEMS gyroscope the mobile mechanical structures are usually actuated by electrostatic forces.

- linear comb drive

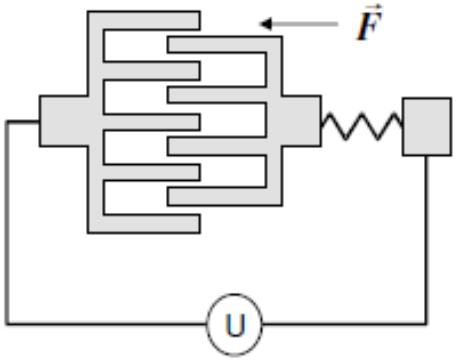

- rotating

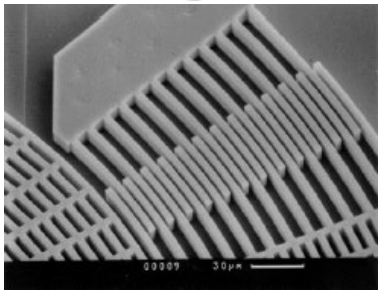

N: number of teeth (fingers)

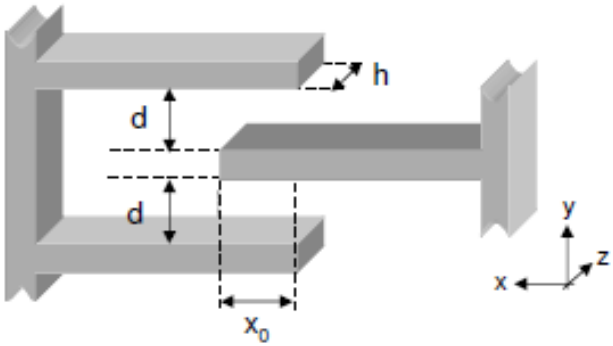

$$C_{total} = 2N\frac{\varepsilon_0 \varepsilon_r h x_0}{d}$$

$$E = \frac{1}{2}C_{total}U^2$$

$$F_{total} = \frac{\partial E}{\partial x} = N\frac{\varepsilon_0 \varepsilon_r h}{d}U^2$$

The force is constant over a displacement x_0

1a) linear-linear Gyroscope

MEMS EDU

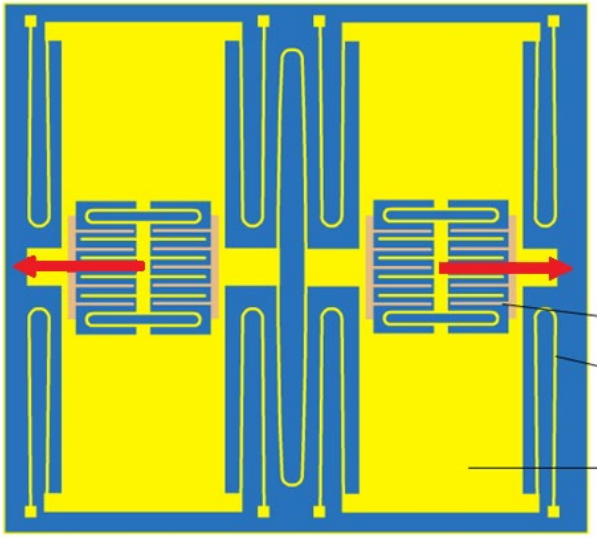

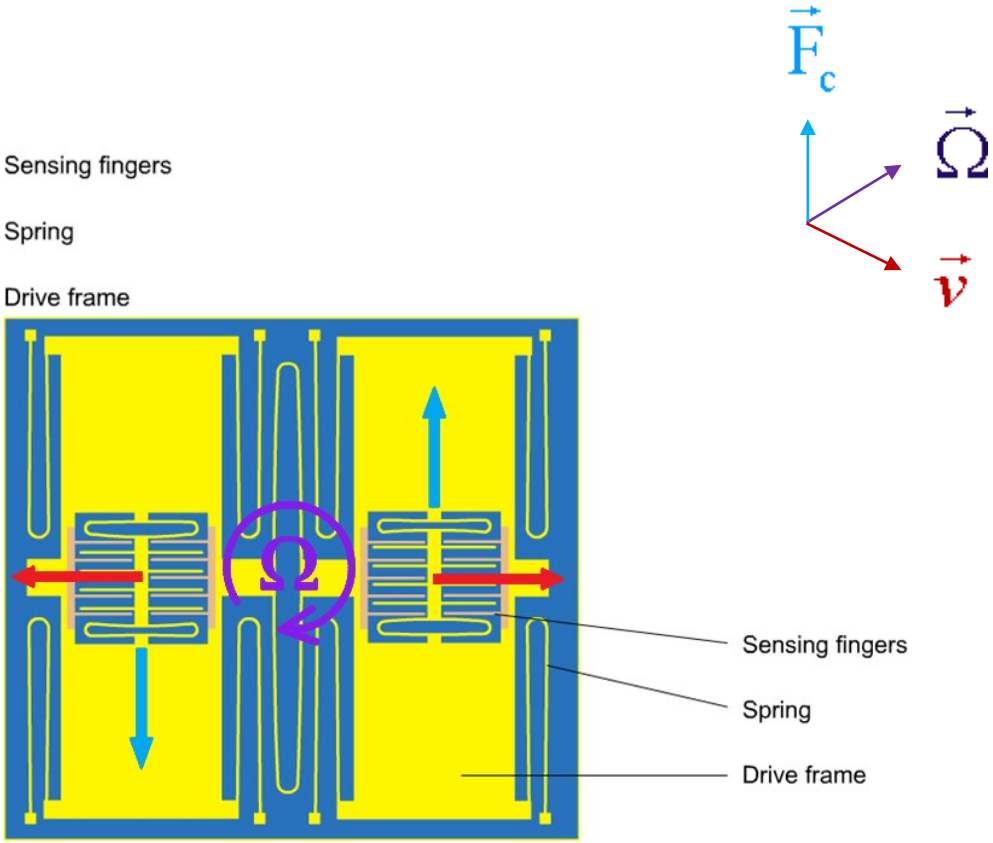

1a) linear-linear Gyroscope

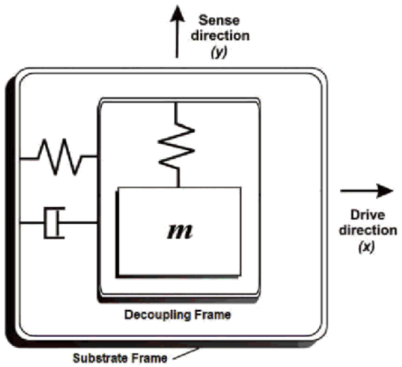

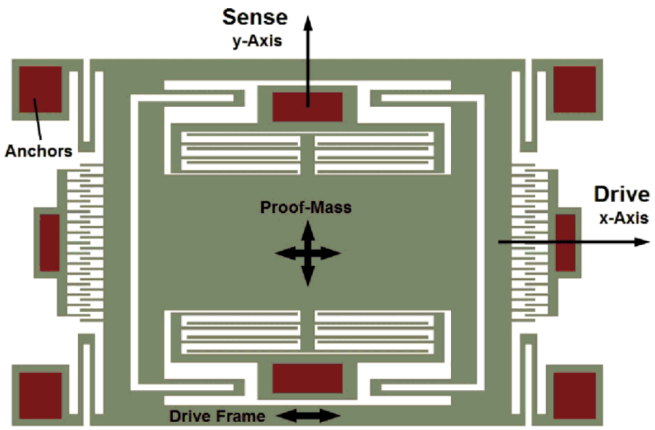

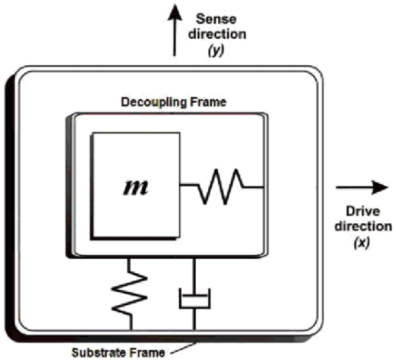

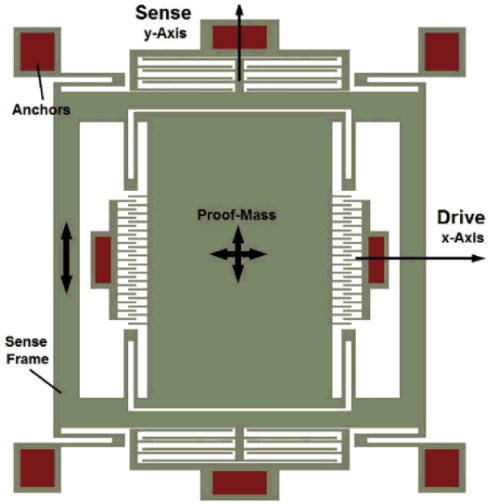

Complete Gyroscope on a single Chip

- Close-up view of the mechanical part of a MEMS gyroscope

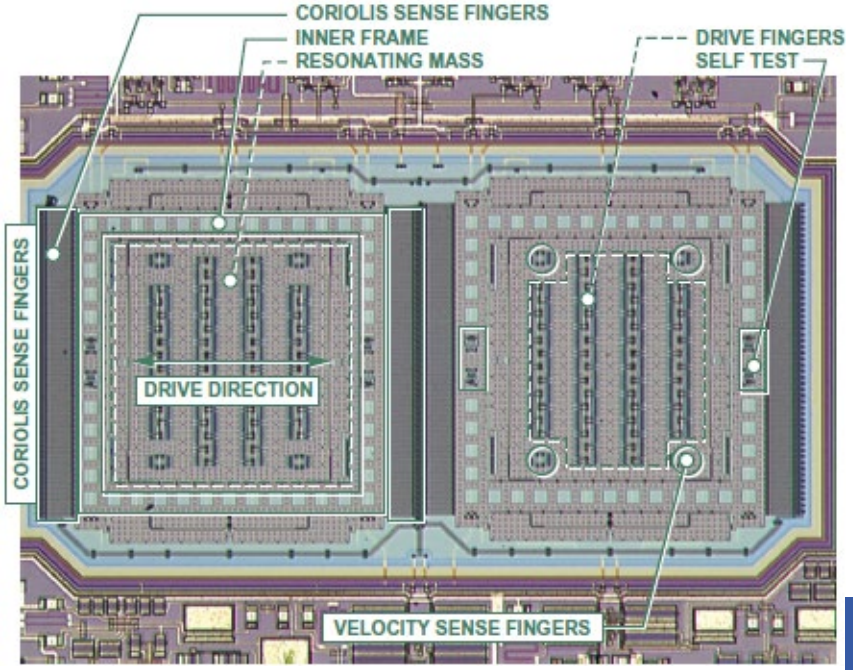

- Full chip including the electronic

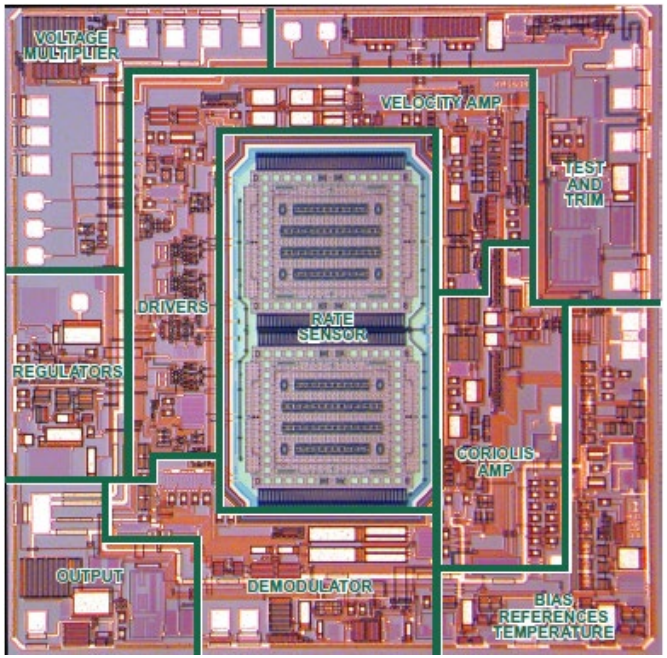

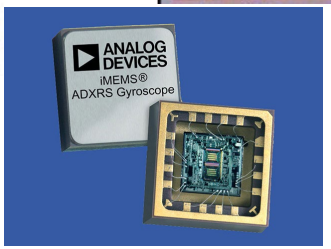

Quality factor Movement Amplification

- We seek to maximise the motion due to the Coriolis force:

3 Axis Gyroscope

L3G4200D (ST Microelectronics)

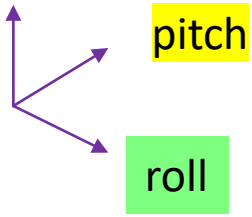

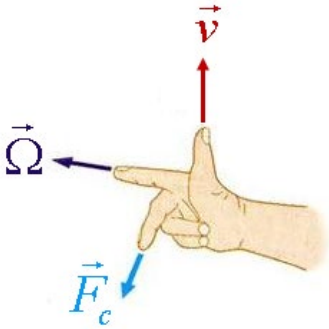

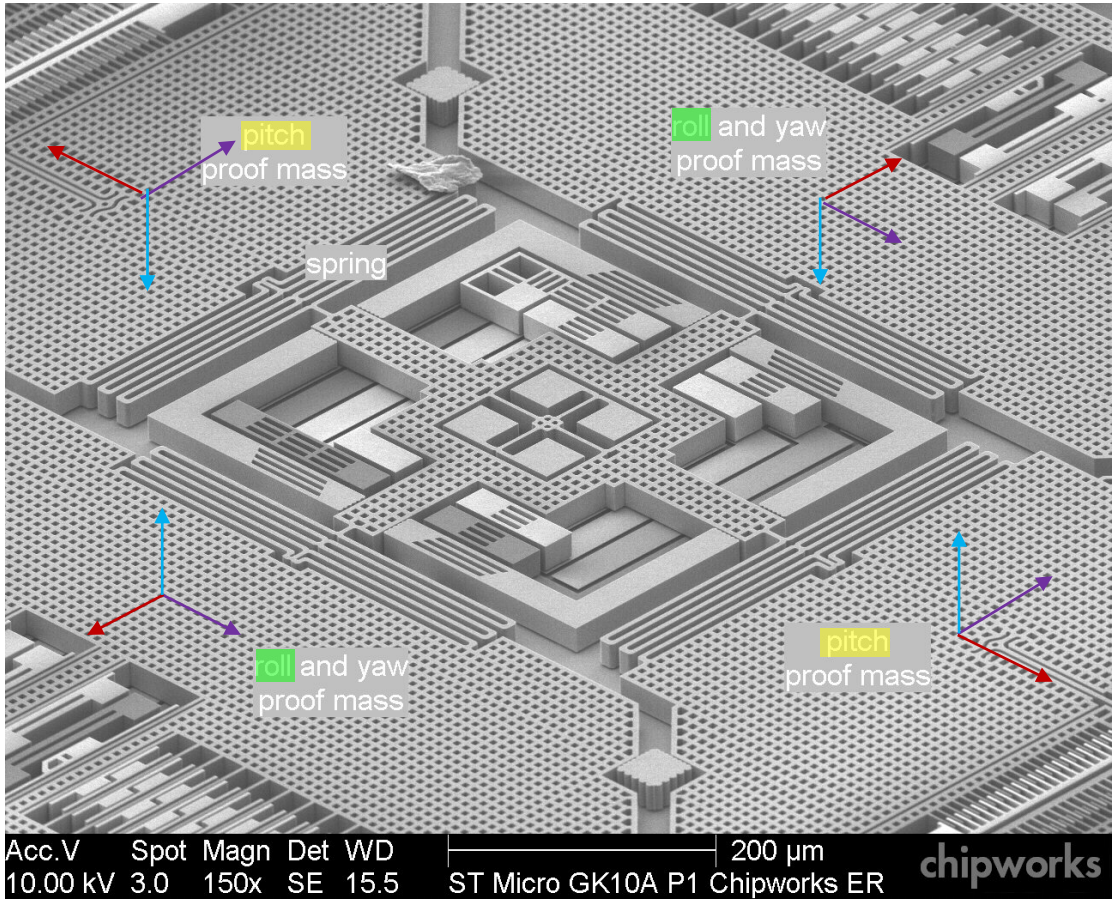

3 Axis Gyroscope

L3G4200D (ST Microelectronics)

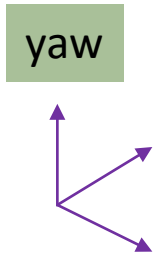

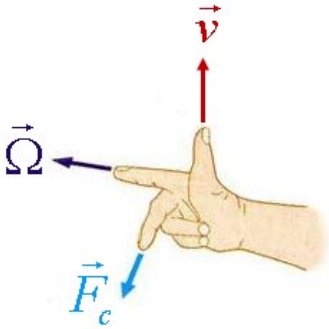

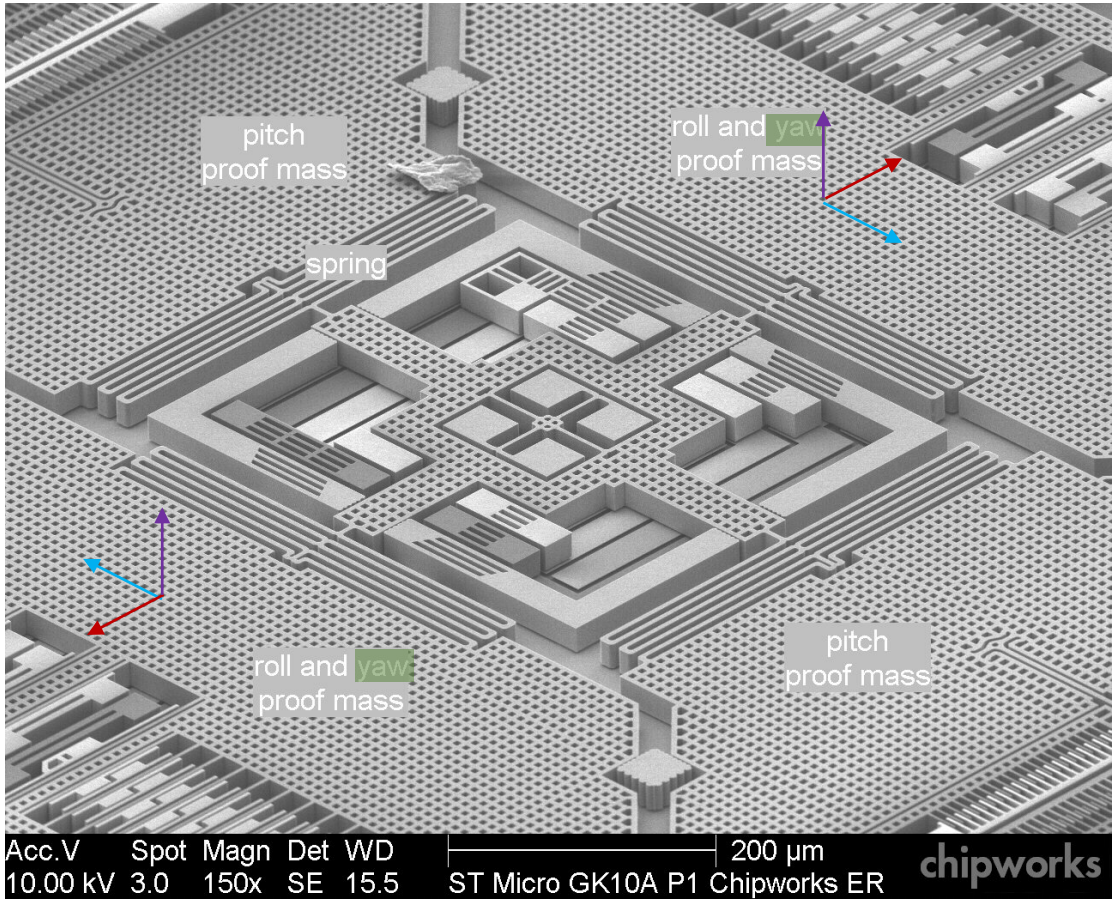

Quadrature Error

- Ideally, the drive movement should only occur in the x-direction
- Due to non-idealities in the coupling spring, this results in a component in the y-direction = quadrature error

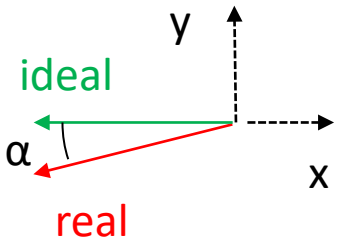

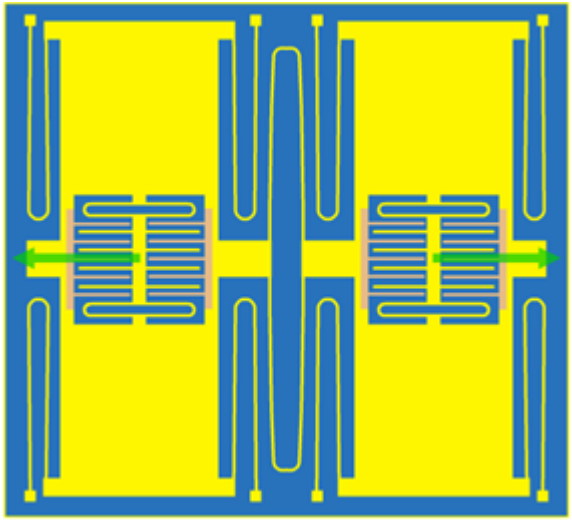

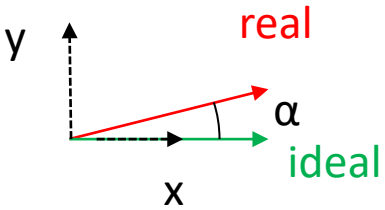

- The quadrature error has a phase shift of 90° with respect to the Coriolis signal

Exercise 2.2

Quadrature Error

The "drive" movement of a gyroscope is x=1µm. Its "sense" oscillation frequency f_s =10kHz, its mass m_s=0.6µg, Q_s=1000.

1) What is the spring constant k_s along the "sense" axis?
2) If the Coriolis force is F_c =0.47nN, what is the motion along the "sense" axis at resonance?
3) The gyroscope has a quadrature error (α=2°). What is the component along the sense axis given by this error?

Le mouvement du «drive» d'un gyroscope se monte à x=1µm. La fréquence de résonance du «sense» f_s = 10kHz, sa masse m_s=0.6µg, Q_s=1000.

1) Quelle est la constante ressort k_s selon l'axe du «sense»?
2) Lorsque la force de Coriolis se monte à F_c=0.47nN. Quel est le mouvement le long de l'axe du «sense» à la résonance?
3) Le gyroscope a une erreur de quadrature (α=2°). Quelle est la composante le long de l'axe du «sense» due à cette erreur?

$$f_s = \frac{1}{2\pi}\sqrt{\frac{k_s}{m_s}}$$

Modulation

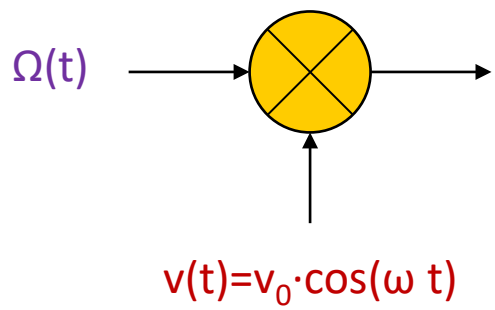

Coriolis force:
$F_c=2mv_0\cdot\cos(\omega\, t)\cdot\Omega(t)$

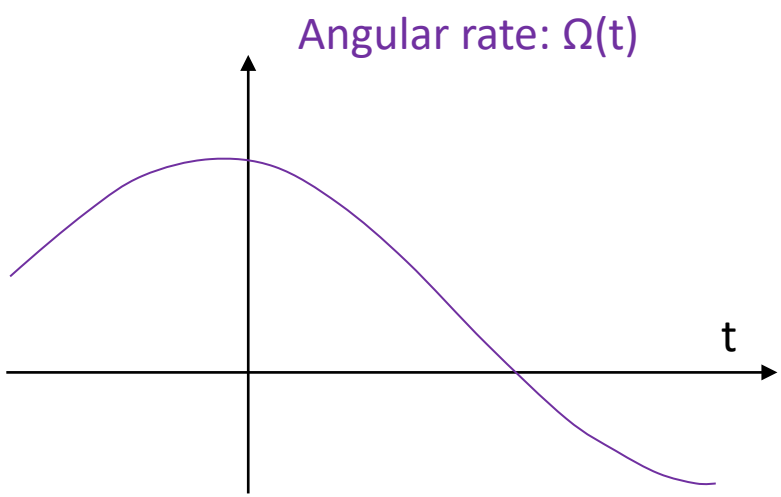

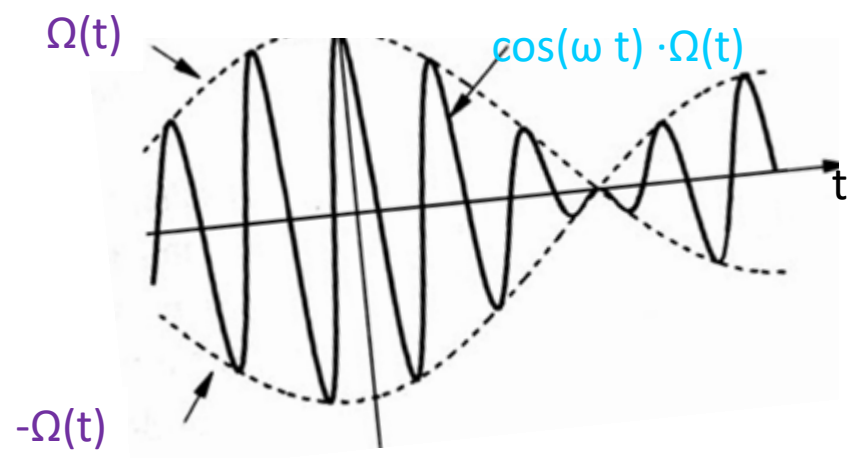

Demodulation

- Synchronous demodulation

Coriolis Force

$F_c = 2mv_0 \cdot \cos(\omega\, t) \cdot \Omega(t)$

$$2mv_0 \cdot \cos(\omega\, t) \cdot \cos(\omega\, t) \cdot \Omega(t) =$$

$$mv_0\, \Omega(t) + \cancel{mv_0\, \Omega(t) \cos(2\omega\, t)}$$

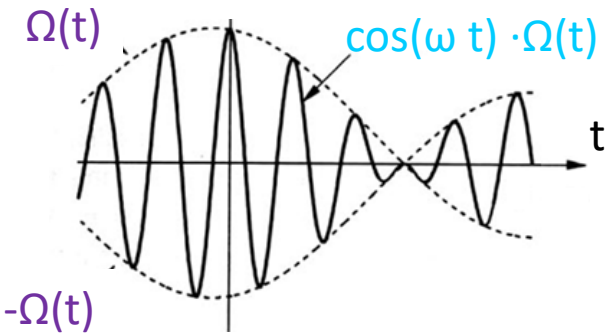

Angular rate: $\Omega(t)$

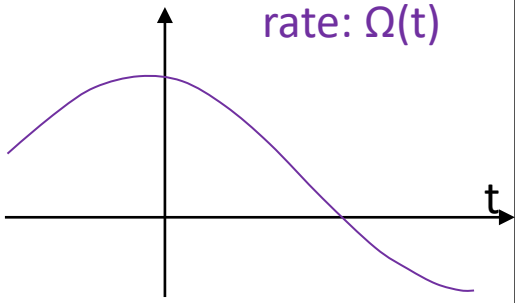

Demodulation Scheme

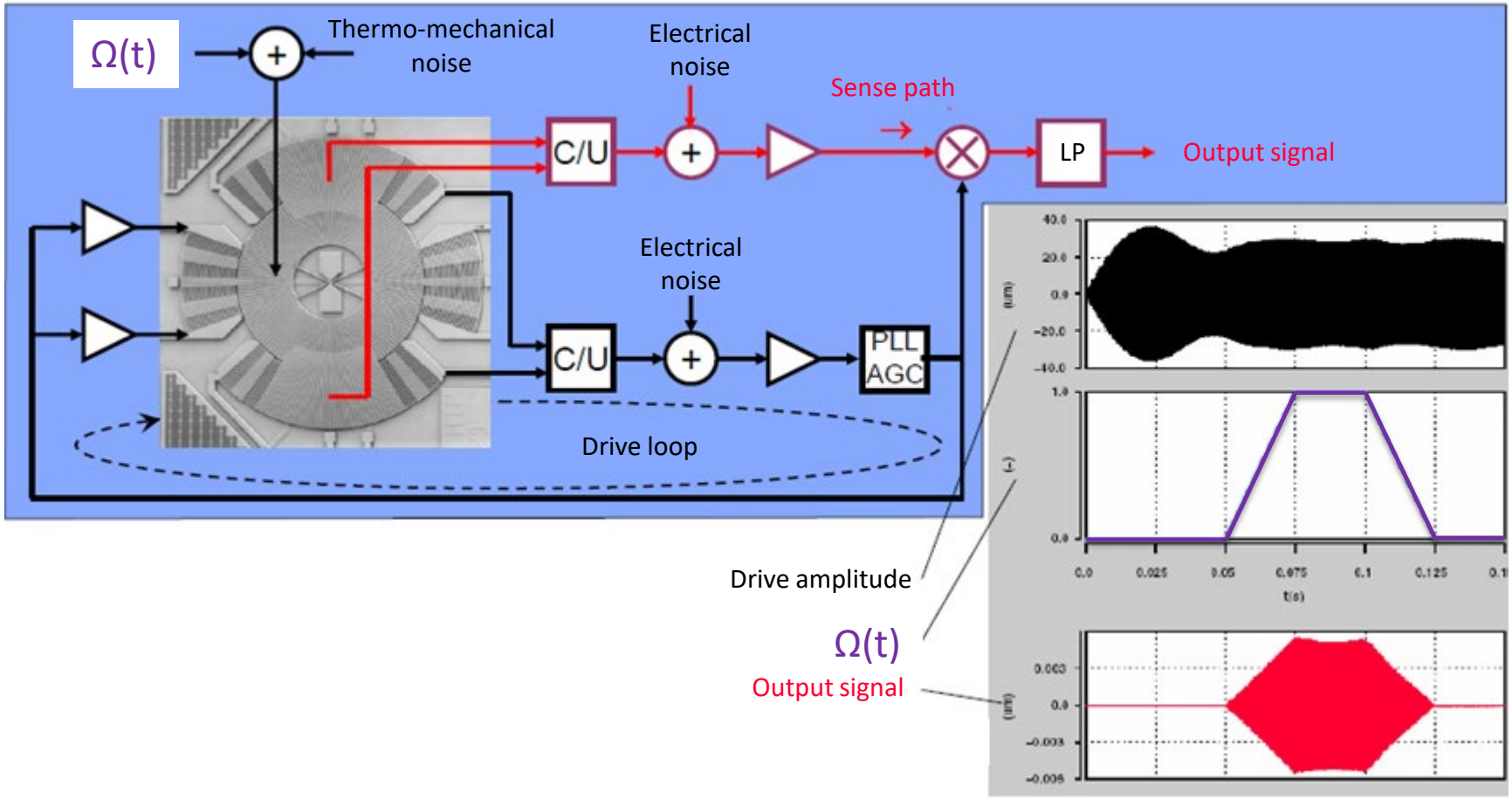

Exercise 2.3

Demodulation

- The force along the "sense" axis can be represented this way when a quadrature error is present:

- La force le long de l'axe du «sense» peut être représenté par l'équation suivante lorsqu'une erreur de quadrature est présente:

$$F_{sense} = mv_0[2\Omega\cos(\omega t)\cos\alpha + \underbrace{\omega\sin\omega t\sin\alpha}_{\text{Quadrature}}]$$

- How large is the quadrature error after synchronous demodulation?

- Quelle est l'erreur de quadrature après la démodulation synchrone?

Angular random Walk ?

Heads or tails:

- A perfect coin is just as likely to fall on the heads side as on the tails side. Suppose a person is standing on the center line of a football field.
- Whenever the coin falls on the heads side, he takes a 1m step forward. Otherwise, he takes a 1m step backwards.
- After playing the coin 1000x, where will he be?

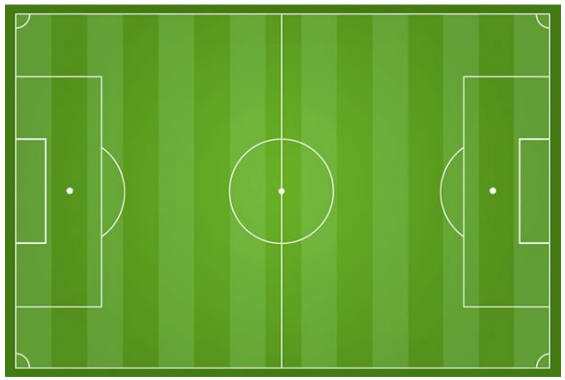

Angular Random Walk ?

Results distribution after 1000 trials

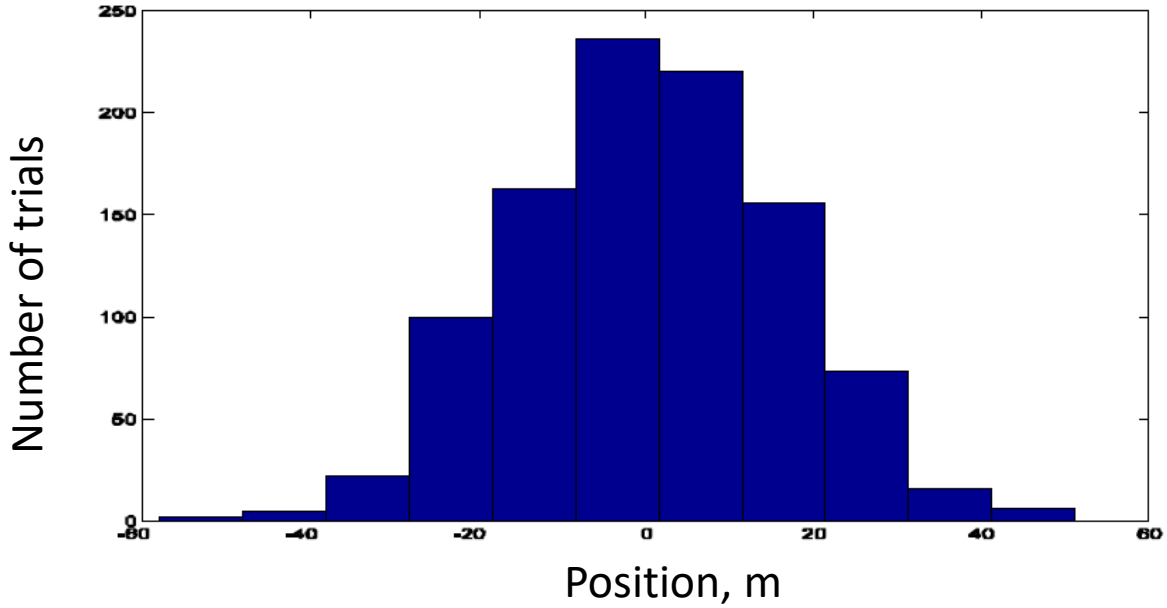

$$\text{Standard deviation}, 1\sigma \cong \frac{1}{2}\sqrt{nb\ trials}$$

Angular Random Walk ?

- The same error occurs when you want to extract an angle from 1000 angular rate measurements

Angle error = ARW * $\sqrt{\text{time}}$

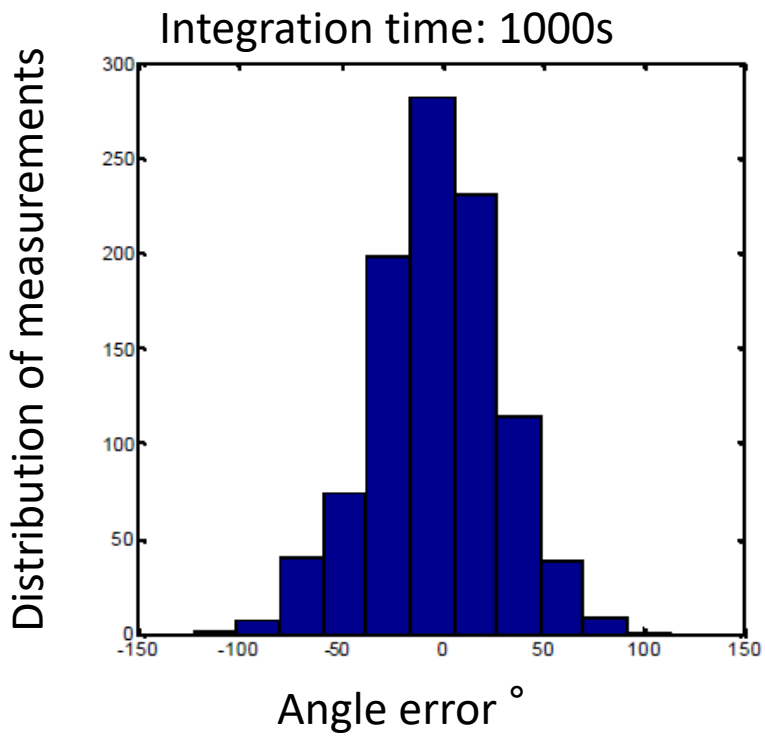

$$ARW = 1°/\sqrt{s}$$

Integration time	Angle error
1 s	±1°
100 s	±10°
1000 s	±32°

Inertial Navigation System

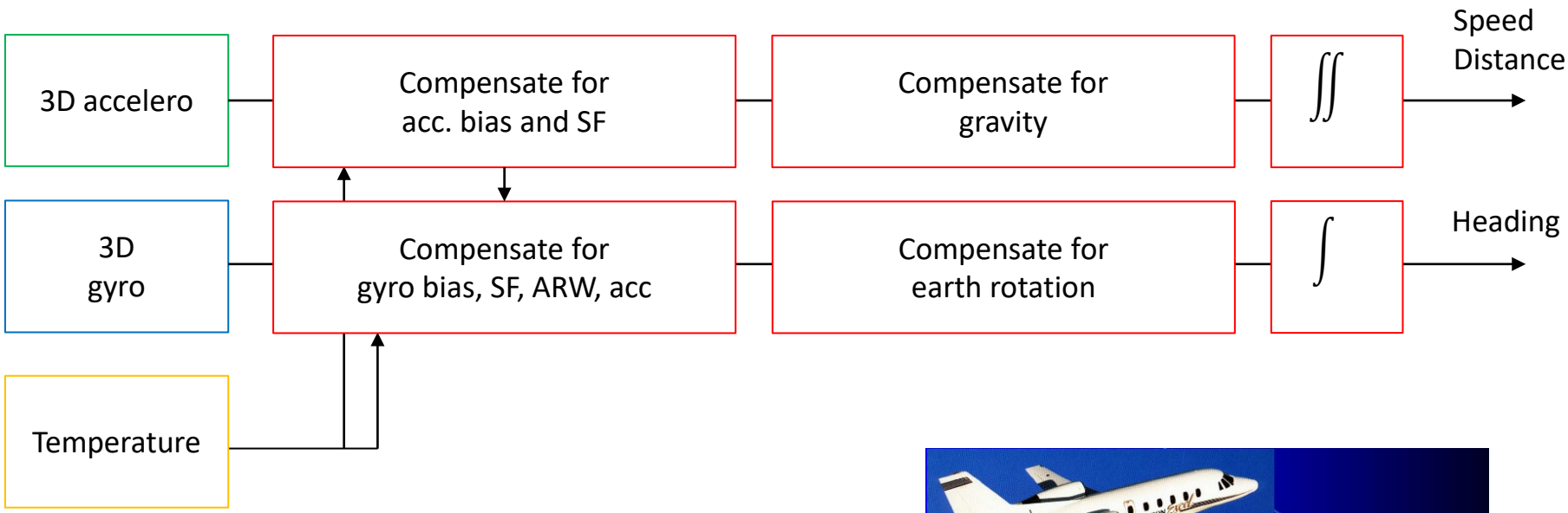

Crista Sensor IMU Enclosure

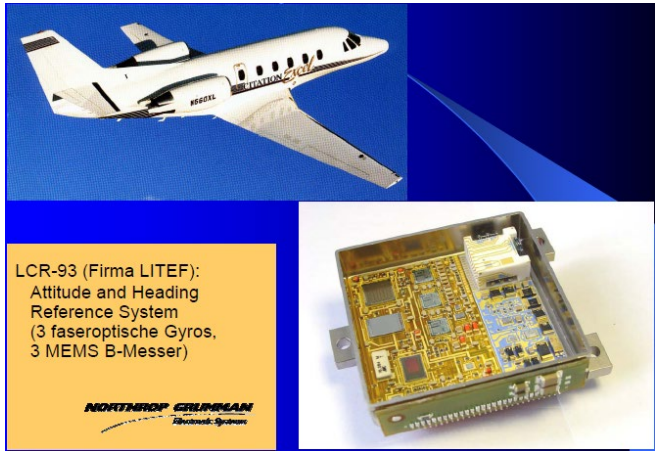

Combo Sensors

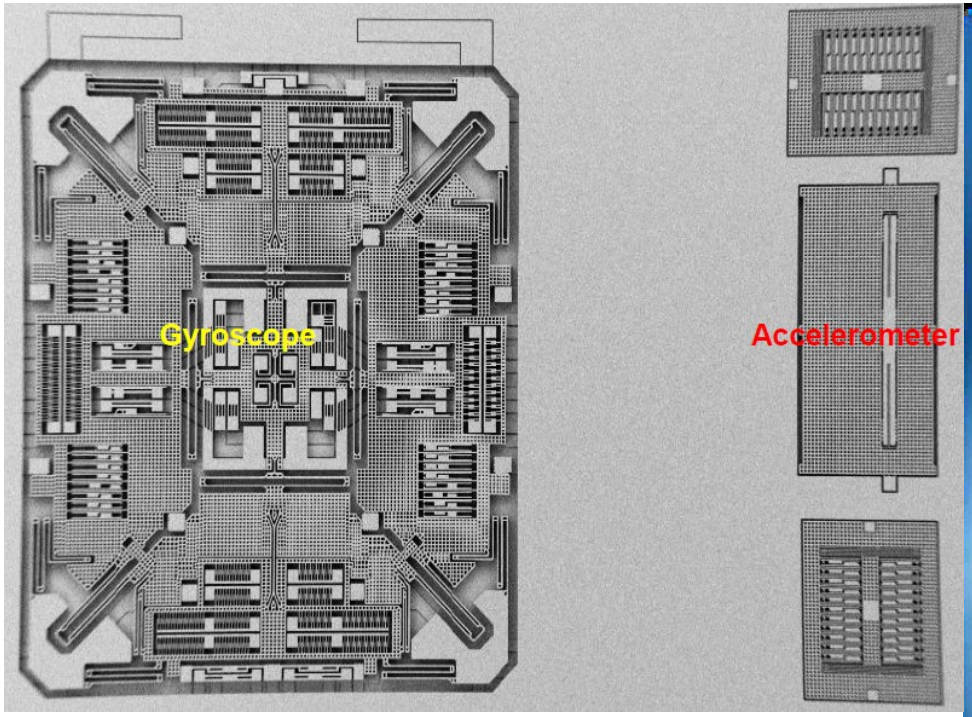

Dipteran Flies

- The halteres vibrate according to the frequency of the wing beat.
- This leads to a pendulum movement that has the same geometry as a gyroscope.
- Like a gyroscope, this pendulum tends to resist forces that try to make it deviate from its plane of oscillation.
- If the insect's direction of flight changes, the plane of vibration of the halteres is maintained and the base of the halteres twists.
- With this information the insects can determine their orientation in space.

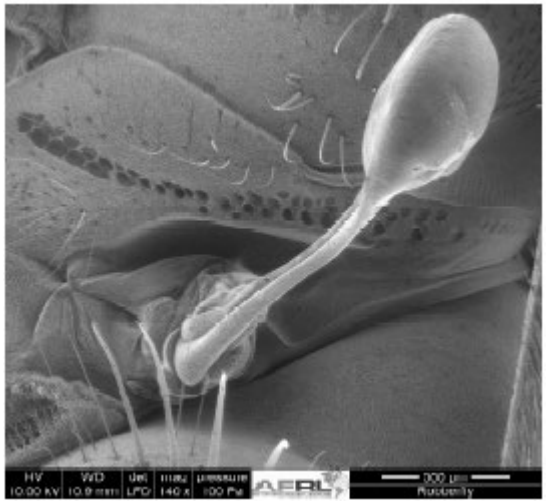

“Antennae as Gyroscopes”, R. McNeill Alexander

Exercise 2.4

Gyroscope Design

1. What is the rotational speed of the earth in rad/s?
2. Federer cuts a tennis ball with 3200 rpm. You need to measure the rotational speed. How many °/s should the sensor measure?
3. A rotation rate sensor has an oscillation frequency of 10kHz and a mass of 50µg. What is the spring constant?
4. The following actuator is used to move the mass of a rotation rate sensor. Calculate the force of 10 such actuators in parallel.

1. Quelle est la vitesse de rotation de la terre en rad/s?
2. Federer slice une balle de tennis à 3200 rpm. Vous devez mesurer cette vitesse de rotation. Combien de ° /s est ce que le capteur doit mesurer?
3. Un gyroscope a une vitesse d'oscillation de 10kHz et une masse de 50µg. Quelle est sa constante ressort?
4. L'actionneur suivant est utilisé pour faire osciller la masse du gyroscope. Calculer la force de 10 actionneurs en parallèle

X_0= 2µm
Y_0=20 µm
h=4 µm
U= 10V

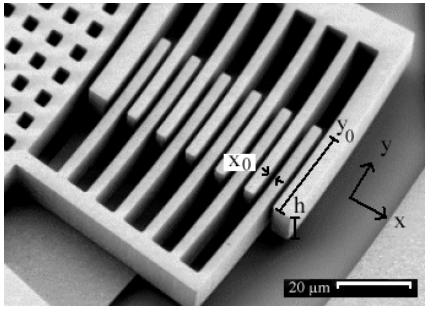

Exercise 2.4

Gyroscope Design

5. This electrostatic force moves a mass (50µg). A spring of 100N/m counteracts this force. How great is the movement under these conditions? How can this movement be amplified?

6. A gyroscope has a frequency of oscillation of 12kHz, an amplitude of ±2µm, a mass of 2µg and an angular rate of π/2 rad/s. What is the Coriolis force?

5. Cette force bouge une masse de 50µg. Un ressort de 100N/m s'oppose à ce mouvement. Quel est le déplacement sous ces conditions? Comment peut-on amplifier ce déplacement?

6. Un gyroscope a une fréquence d'oscillation de 12kHz, une amplitude de ± 2µm, une masse de 2µg et une vitesse de rotation de π/2 rad/s. Quelle est la force de Coriolis?

Smart Sensors

3. Ambient Light Sensor & Time of Flight Sensor

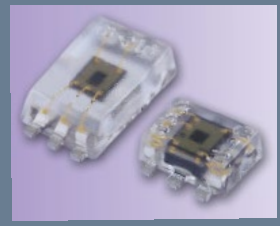

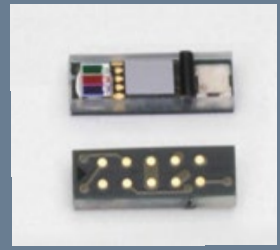

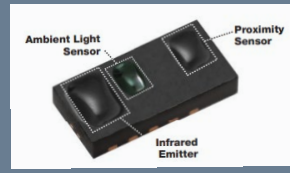

Ambient Light Sensor or ALS

Illumination Sensor

Illuminance Sensor

Brightness Sensor

ALS (Ambient Light Sensor)

- Display brightness automatic adjustment
- Office building lamps or streetlights dimming
- Automatic cars instruments dimming
- Switching on vehicle headlights in the twilight or when entering a tunnel

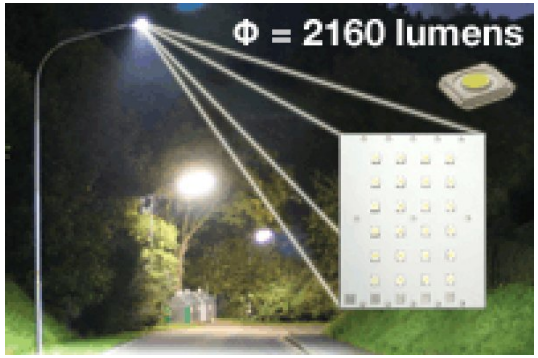

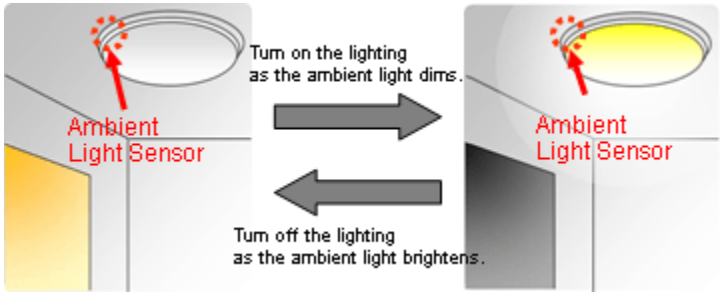

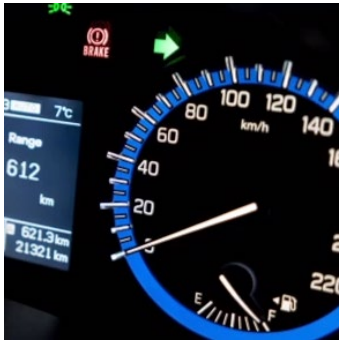

Radiometric vs Photometric

Radiometric unit:

- radiant energy in terms of absolute power

each wavelength weighted according to a standardized model of human visual brightness perception

Photometric unit:

- radiant energy perceived by the eye

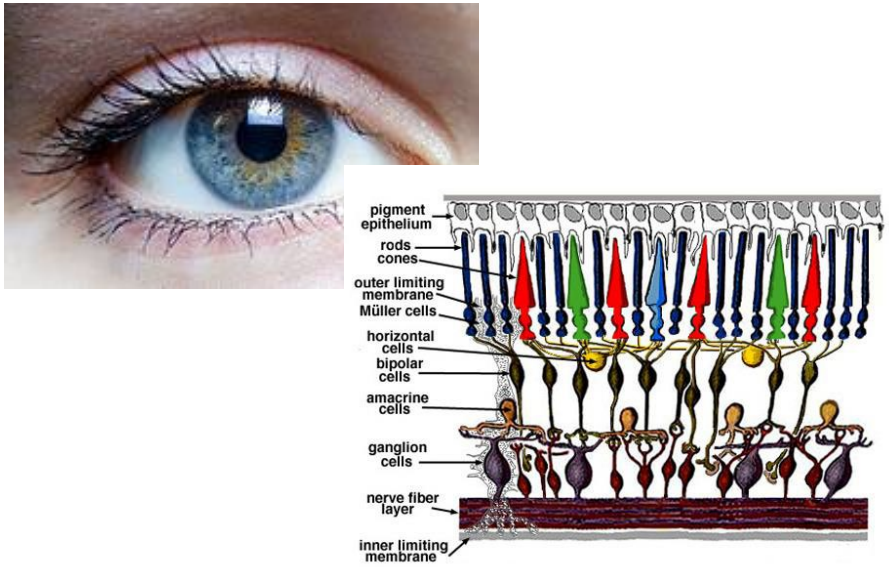

Sensitivity of human eyes

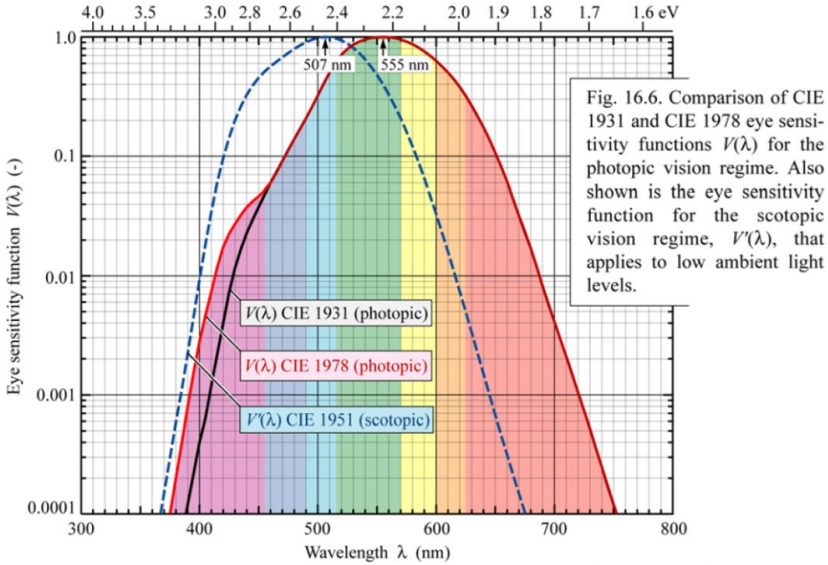

Fig. 16.6. Comparison of CIE 1931 and CIE 1978 eye sensitivity functions $V(\lambda)$ for the photopic vision regime. Also shown is the eye sensitivity function for the scotopic vision regime, $V'(\lambda)$, that applies to low ambient light levels.

Wave-Particle Duality

Light is a…

… wave?

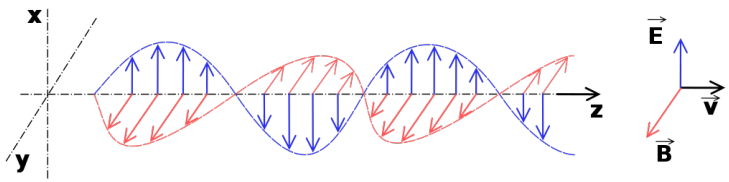

… particle?

$$E_p = h\nu = \frac{hc}{\lambda}$$

E_p: photon energy
h: Planck constant $h = 6.626 \cdot 10^{-34}$ Js
ν: light frequency
λ: light wavelength
c: speed of light in vacuum

Both!

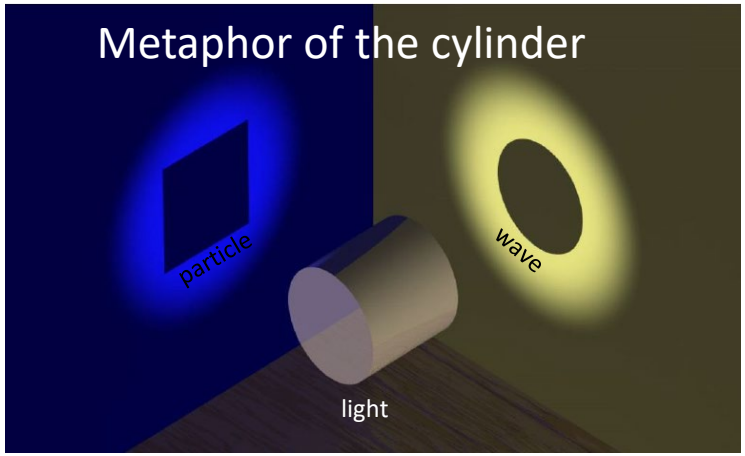

Physical Definitions

	Radiometric	Photometric	
Luminous flux ϕ	W	*Lumen* lm	
Illuminance E_v	$\frac{W}{m^2}$	$Lux = \frac{lm}{m^2}$	 $A = 1m^2$
Luminous intensity I_v	$\frac{W}{sr}$	$cd = \frac{lm}{sr}$	$\Omega = 1sr$ Ω: *solid angle*

1sr = 1 steradian

Lux

- Illuminance (E_v) = measuring luminous flux per unit area

Illumination condition	Illuminance
Quarter moon	0.01 lux
Full moon overhead at tropical latitudes	1 lux
Family living room	50 lux
Hallway/toilet	80 lux
Office lighting (norme EN 124641)	500 lux
Overcast day, typical TV studio lighting	1000lux
Full daylight (not direct sun)	10’000 lux – 25’000 lux
Direct sunlight	32’000 lux – 130’000 lux

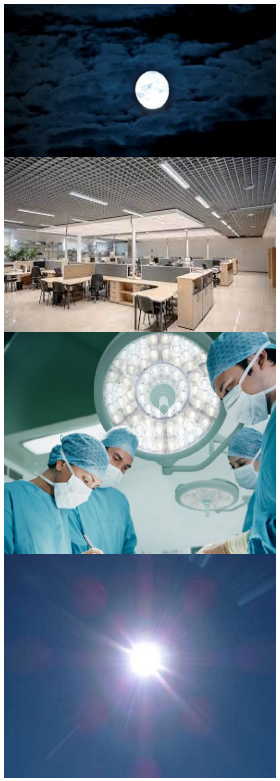

Quiz

Illuminance

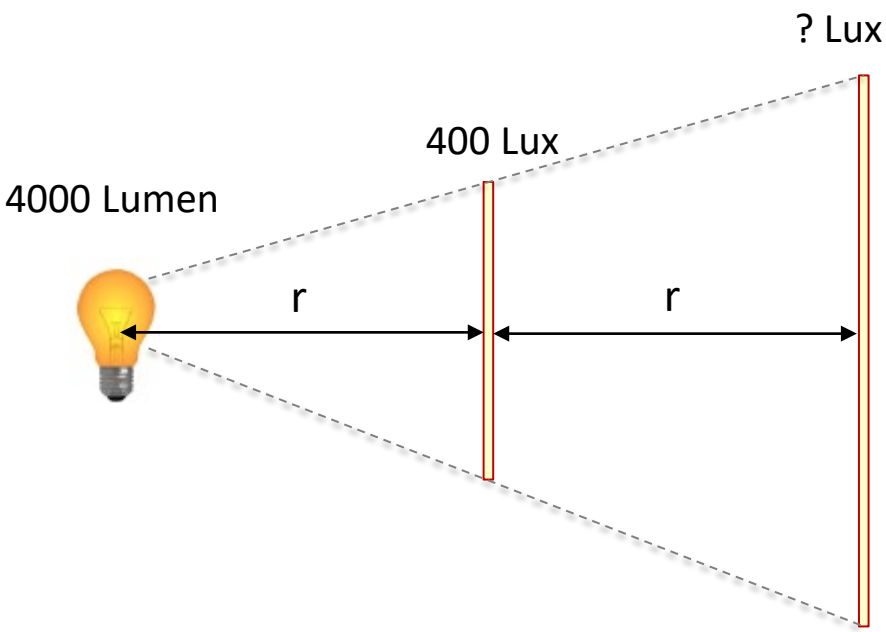

Which Detectors could be used?

- Photodiodes / phototransistors using the internal photoelectric effect

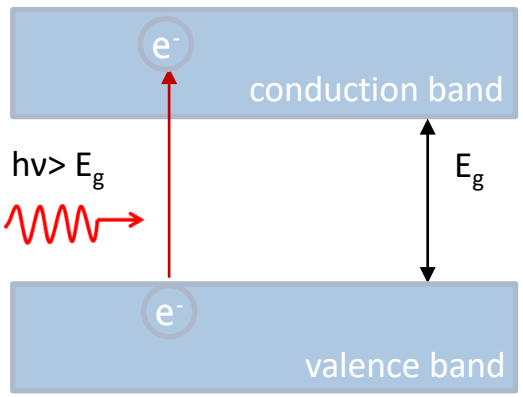

$$\lambda_{cut-off} = \frac{hc}{E_g}$$

λ = wavelength
E_g = bandgap energy
h = Planck's constant
c = light speed

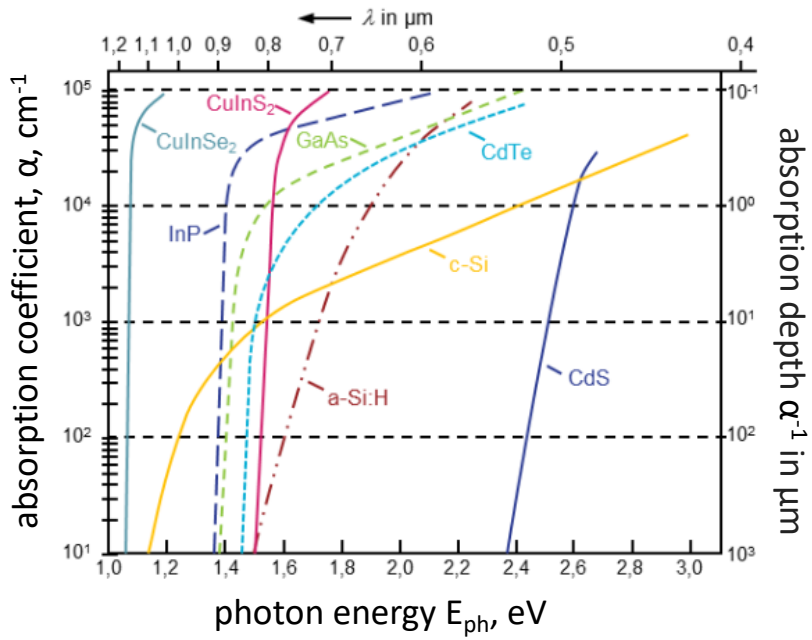

An electron is promoted to the conduction band and can then move freely in the semiconductor

Sensitivity of a Si Photodiode

- Why is there a minimum (resp. a maximum)?

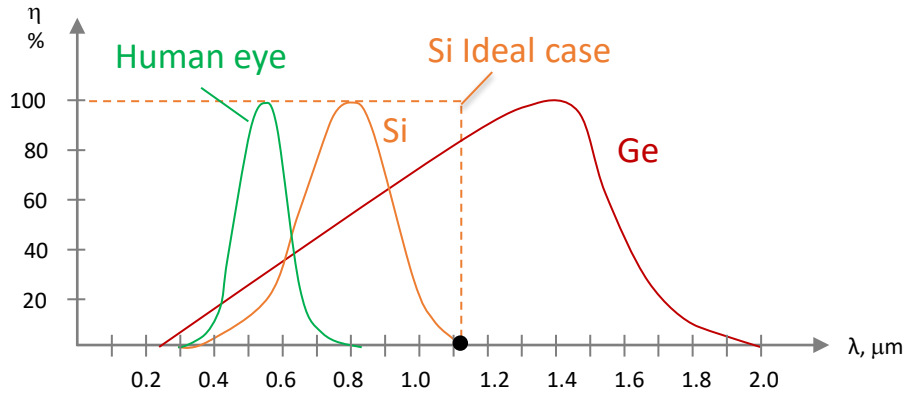

1) Maximum value:

$$\lambda_{cut-off} = \frac{hc}{E_g} = \frac{6.63 \cdot 10^{-34} \cdot 3 \cdot 10^{8}}{1.1 \cdot 1.6 \cdot 10^{-19}} = 1.13\mu m$$

Sensitivity of a Si Photodiode

2) Minimum value is due to the absorption law:

$$I(x) = I_0 \cdot e^{-\alpha x}$$

I_0: initial intensity
α : absorption coefficient
x: distance

Intensity $I(x)$ of a radiation after it has travelled a distance x in the material:

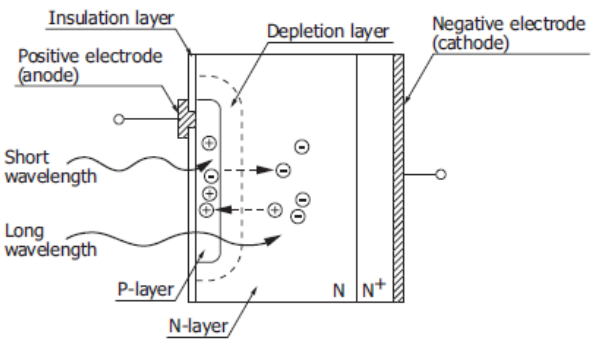

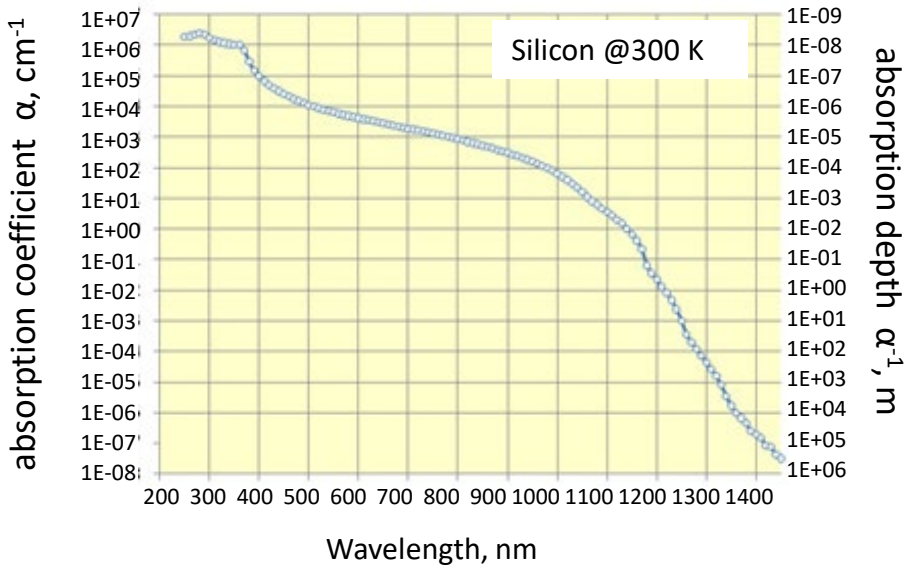

ALS (Ambient Light Sensor)

But… the relative spectral sensitivity should approach the sensitivity of the human eye.

- **Solution 1:** Most photodiodes/photototransistors are equipped with an epoxy filter.

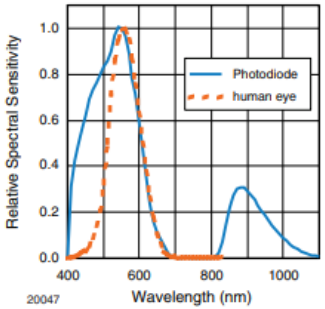

- **Solution 2:** Two photodiodes with two different silicon depths

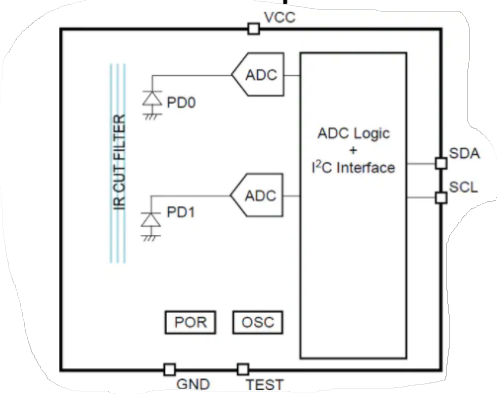

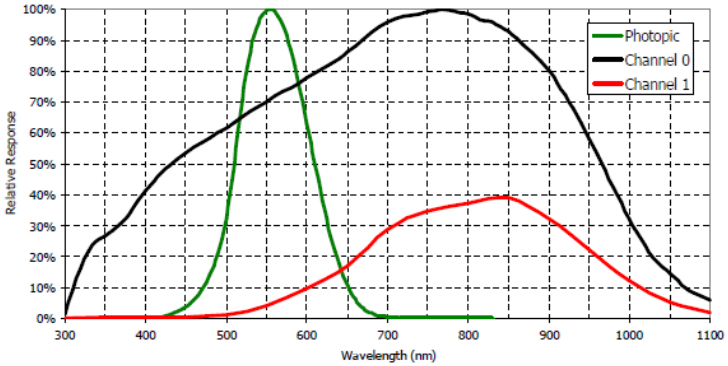

From Photodiode to Ambient Light Sensor

An ALS detect light or brightness in a manner similar to the human eye

ALS = single chip with:

- photodiode
- amplification
- control electronics

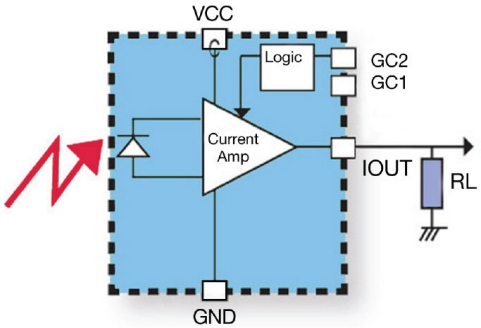

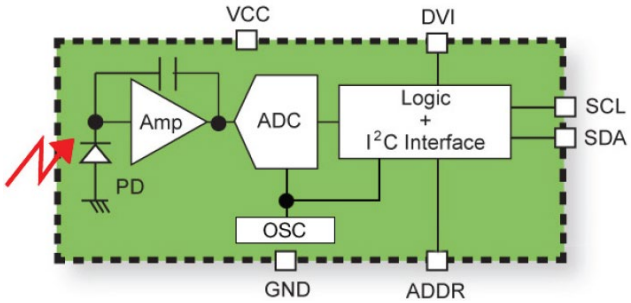

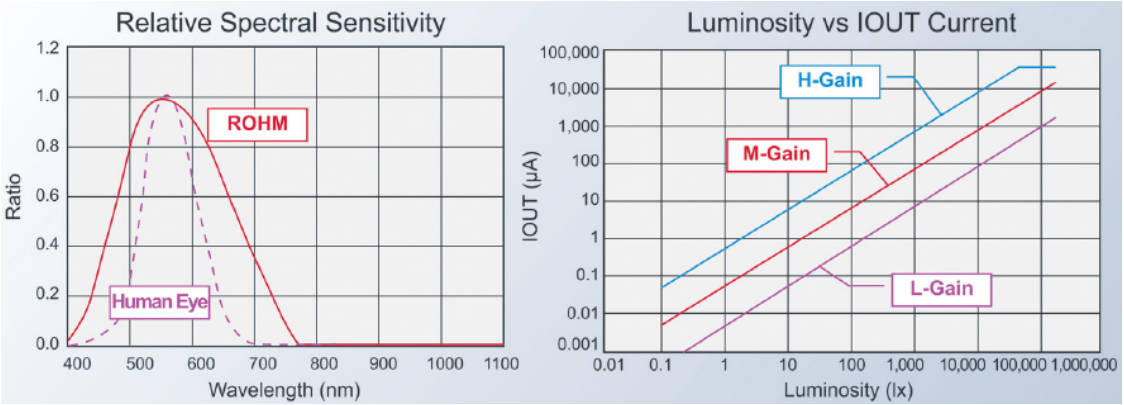

From Photodiode to Ambient Light Sensor

log Output Characteristic: For brightness measurements a good relative resolution over the entire illuminance range is important:

2.8 x 2.2x2.2mm

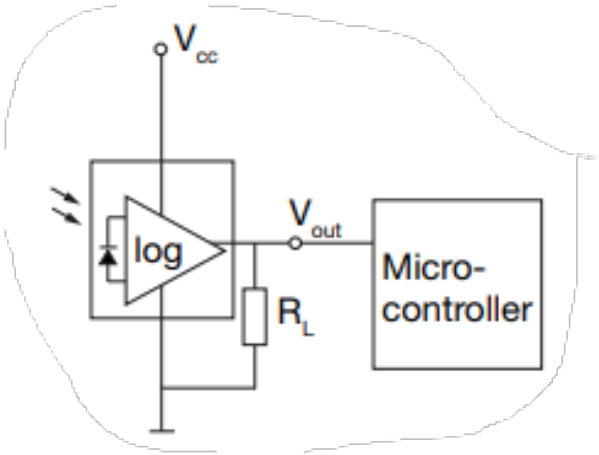

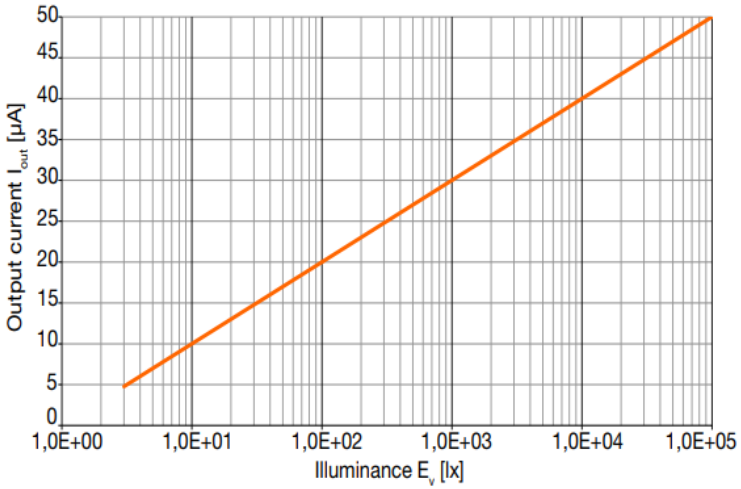

Sensitivity binning, trimming or calibration*

TYPE DEDICATED CHARACTERISTICS (T_{amb} = 25 °C, unless otherwise specified)						
PARAMETER	TEST CONDITION	BINNED GROUP	SYMBOL	MIN.	MAX.	UNIT
Photo current	E_V = 100 lux, CIE illuminant A, V_{CE} = 5 V	A	I_{PCE}	7.5	15	µA
		B	I_{PCE}	12	24	µA
		C	I_{PCE}	19.5	39	µA

*example given for Vishay TEMT6200FX01 ALS Sensor

Application nore: “High accuracy ambient light sensor SFH 5711”, Osram, 2018

Exercise 3.1

Ambient Light Sensor (ALS)

http://www.ti.com/lit/an/sbea002/sbea002.pdf

1. You want to protect your ALS with a window. The distance between the board and the window is 3±0.5mm. How wide should the window be? (Take a window like in the lower picture in Fig. 6. (n_{Glass}=1.6).
2. The angle of reception on the photodiode is 45°. Will the window change this angle?
3. What is the problem with IR or UV light? What can be done about it?
4. The screen supplier has changed its glass material. The new refractive index is now 1.8. What do you need to change?

1. Vous voulez protéger votre ALS avec une fenêtre. La distance entre le PCB et la fenêtre est de 3±0.5mm. Quelle largeur doit avoir la fenêtre ? (Prenez une fenêtre comme sur l'image du bas de la fig. 6. (n_{Glass}=1.6)
2. L'angle d'acceptance de la photodiode est de 45°. Est ce que la fenêtre va changer cet angle?
3. Quel est le problème avec la lumière IR ou UV? Que pouvez vous faire la contre?
4. Le fournisseur d'écran change le matériel de son verre. Le nouvel indice de réfraction est de 1.8. Que devez-vous changer?

Time of Flight

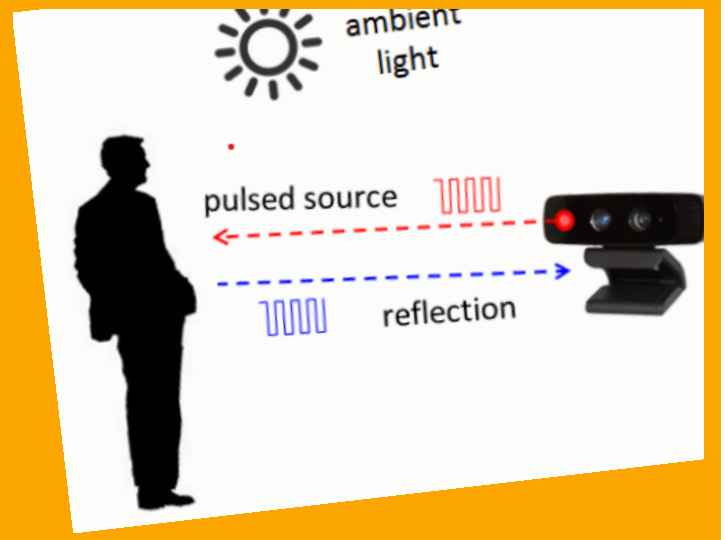

Time of Flight (ToF) Applications

User detection

Parking space occupancy

Waking up on target / Presence detection

Coin detection

Collision avoidance

Smartphone

ToF Principle

Active illumination system:

- Laser emits light (photons) towards a target
- Light (partially) reflected from the target
- Sensor area determines when light (photons) arrives

ToF is translated into distance

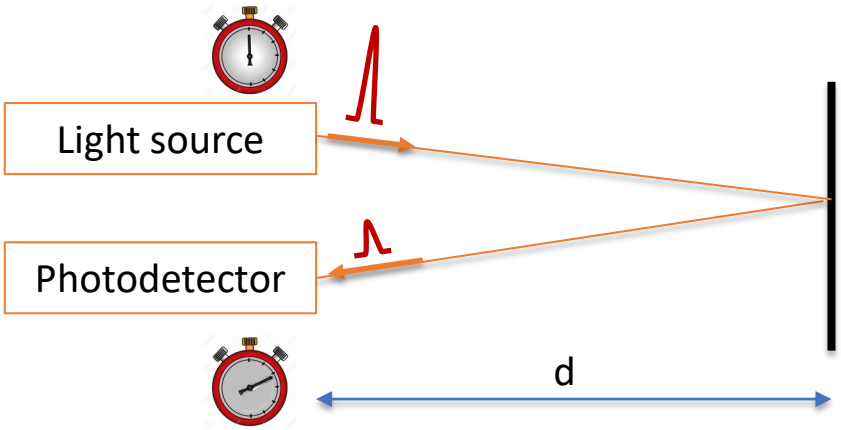

- Photon travel time NOT affected by target reflectance (color or texture)

Exercise 3.2

Time of Flight (TOF) Sensor

1. You get a time difference Δt, how do you get the measured distance d?
2. What time measurement accuracy do we need to get a 1mm distance accuracy?
3. What happens if the measurement does not take place in vacuum?
4. If you have a pulsed modulated light (see fig.), how do you choose the modulation frequency?

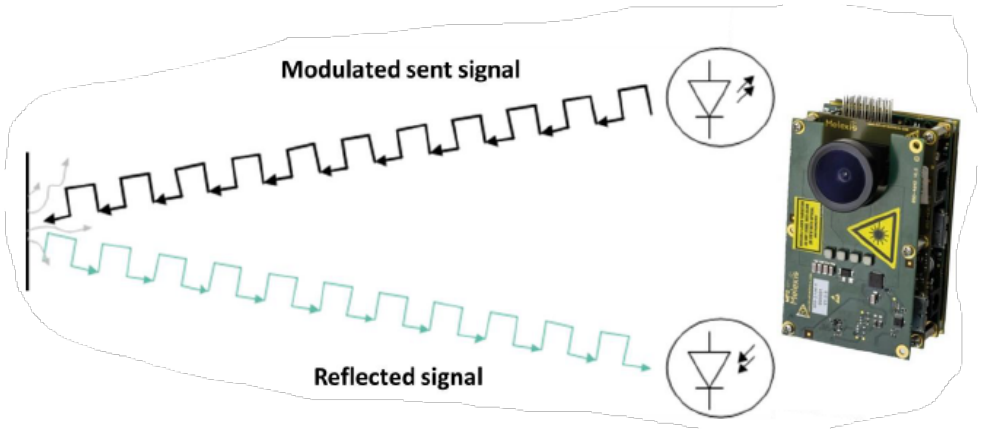

Direct or Indirect?

- Two ways to measure the Time of Flight (ToF):

Direct (DToF)	Indirect (ITOF)
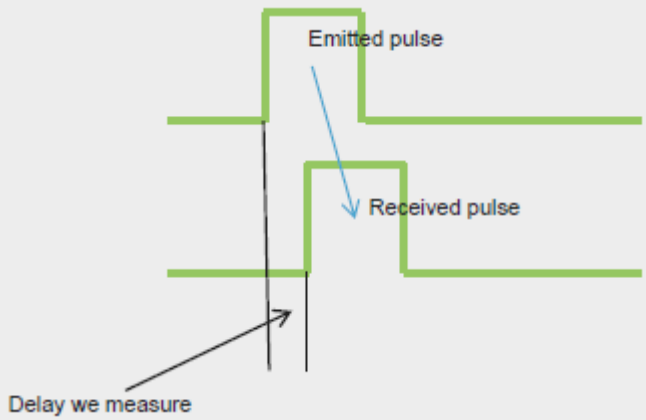	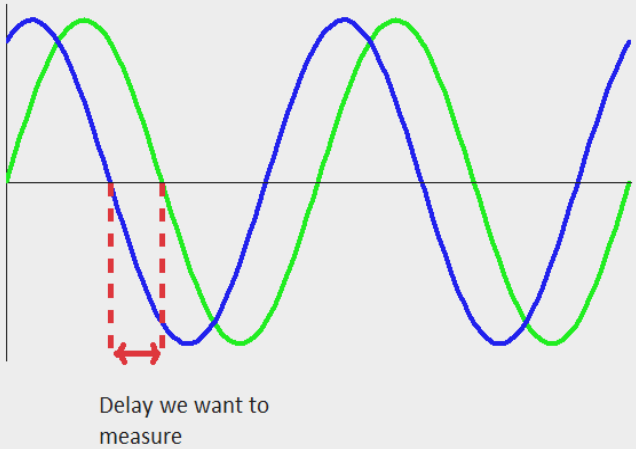
time difference	phase difference

TOF Example

Fully integrated device:

- Vertical Cavity Surface Emitting Laser = VCSEL - Emitter:
- Single Photon Avalanche Diode = SPAD - Receiver:

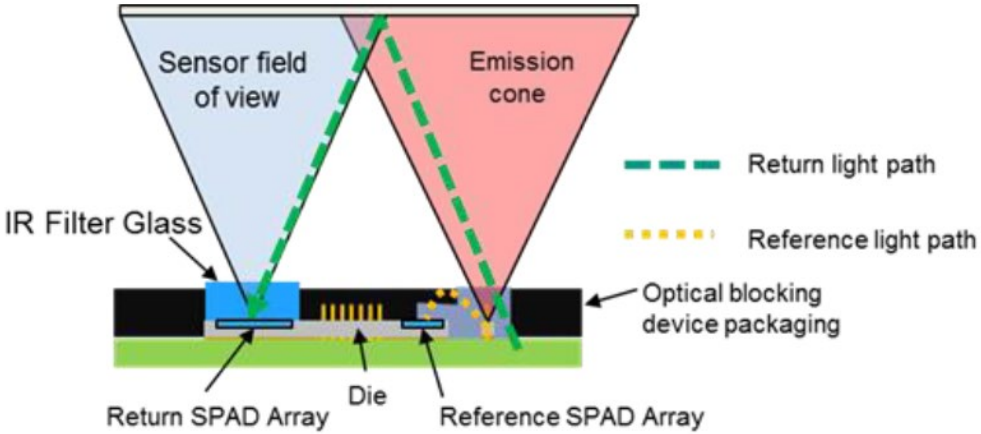

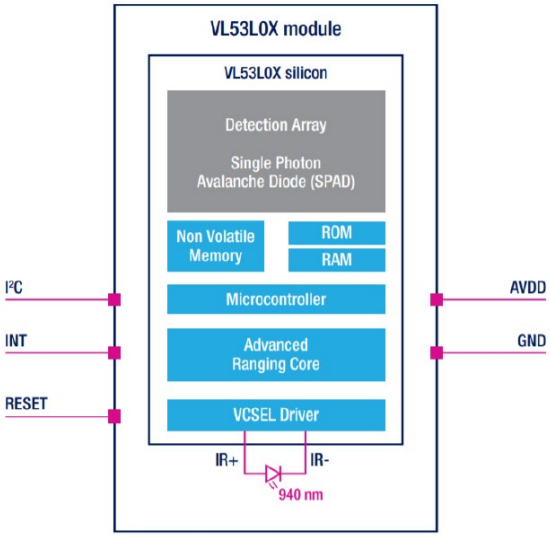

Vertical-cavity surface-emitting laser (VCSEL)

- light leaves the device in a direction perpendicular to the chip surface
- The resonator (cavity) is realized with two semiconductor Bragg mirrors
- Photons are produced in the active region (quantum wells)

Characteristics:

- high beam quality of low-power VCSELs
- low beam divergence

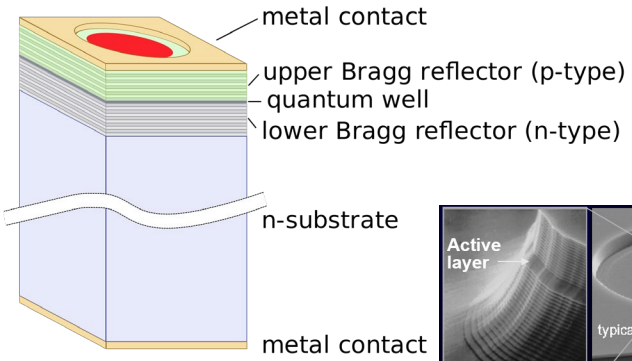

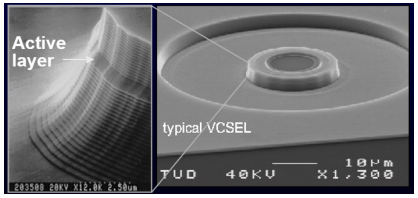

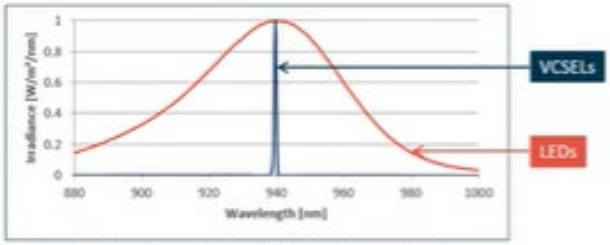

Typical spectrum of a LUXEON L1I0 – 0940xxx LED emitter (red) vs VCSEL (blue)

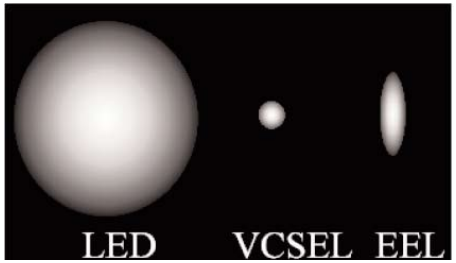

Photodetectors

- PN junction: modes of operation

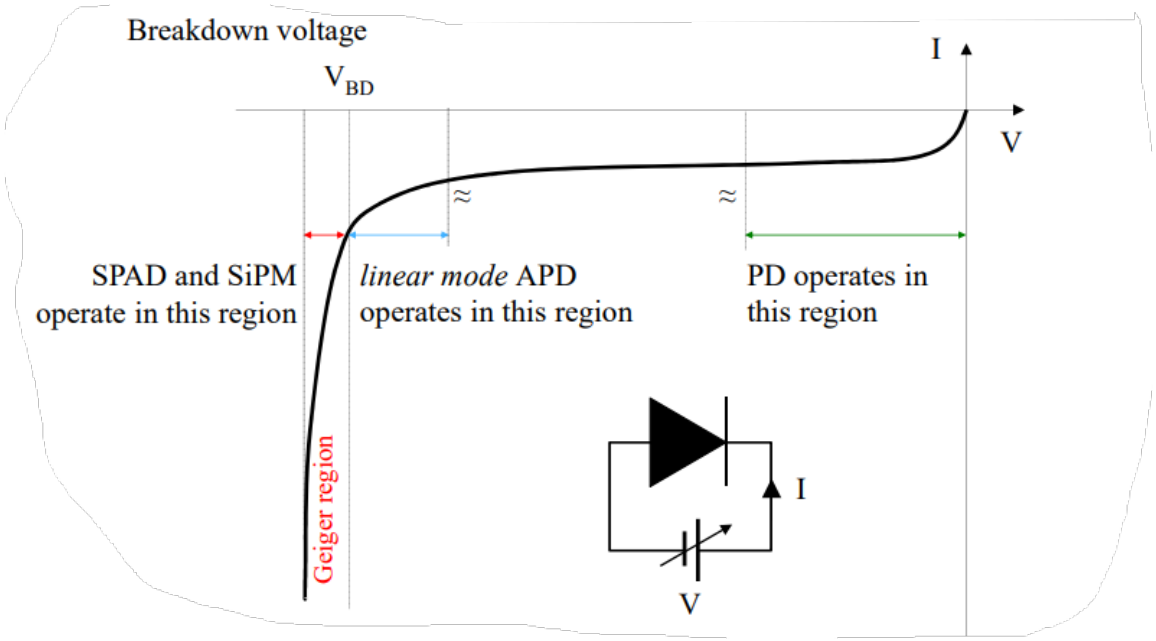

PD = Photodiode

APD = Avalanche PhotoDiode

SPAD = Single Photon Avalanche Diode

Single-Photon Avalanche Diode (SPAD)

- SPAD is biased well above its reverse-bias breakdown voltage and has a structure that allows operation without damage.
- A single charge carrier can trigger a self-sustaining avalanche. A SPAD can detect single photons.
- The avalanche is then quenched by lowering the bias voltage.
- A standard output pulse synchronous with the avalanche build-up is generated.

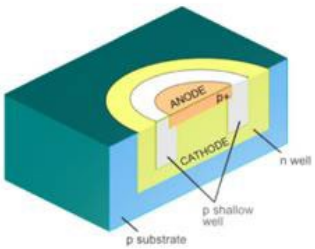

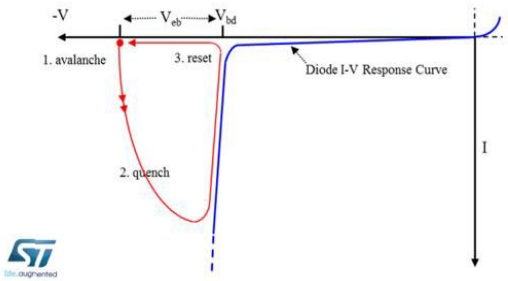

Example: Passive quenching circuit

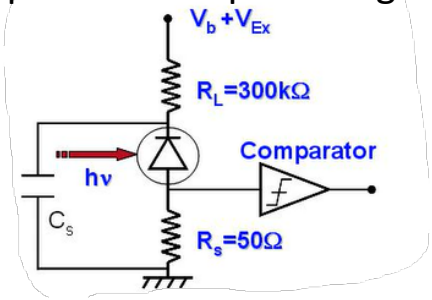

Exercise 3.3

TOF Signal Readout

00:00 – 01:50

Pulse delay method: two pulsed signals C_1 and C_2 are synchronous with the emitted light pulse. C_2 is 180° out of phase. The returned photons are counted when C_1, (or C_2) is set to 1 and correspond to the charge number Q_1 (or Q_2).

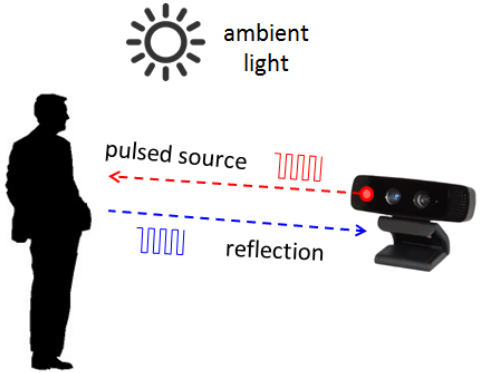

1. How can I deduce the distance?

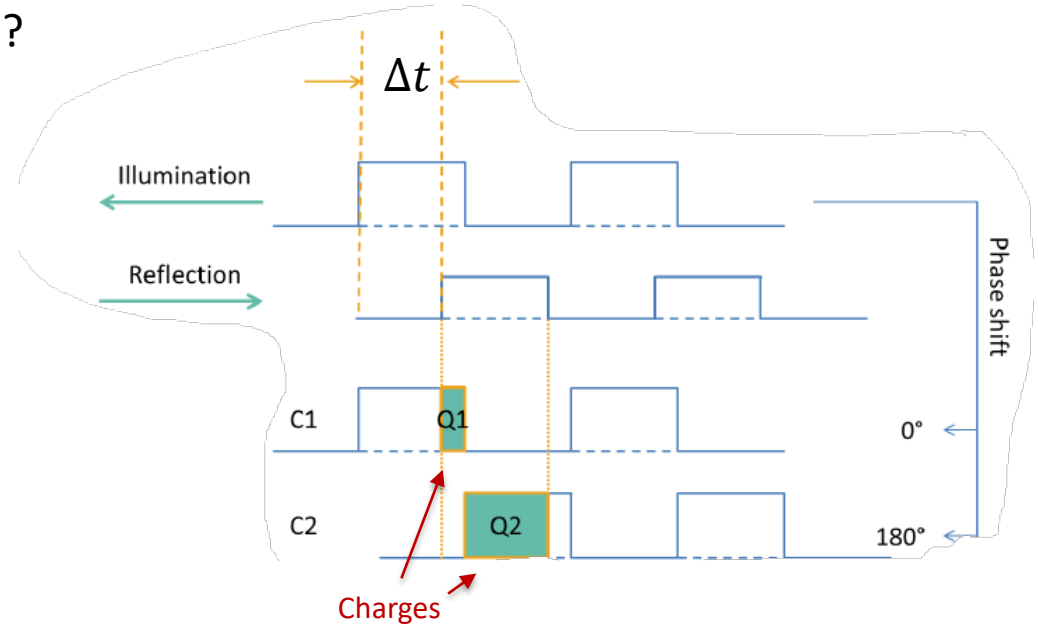

Indirect ToF Modulation/Demodulation

- **4 phases solution:** remove the dark voltage and the contribution from the sun

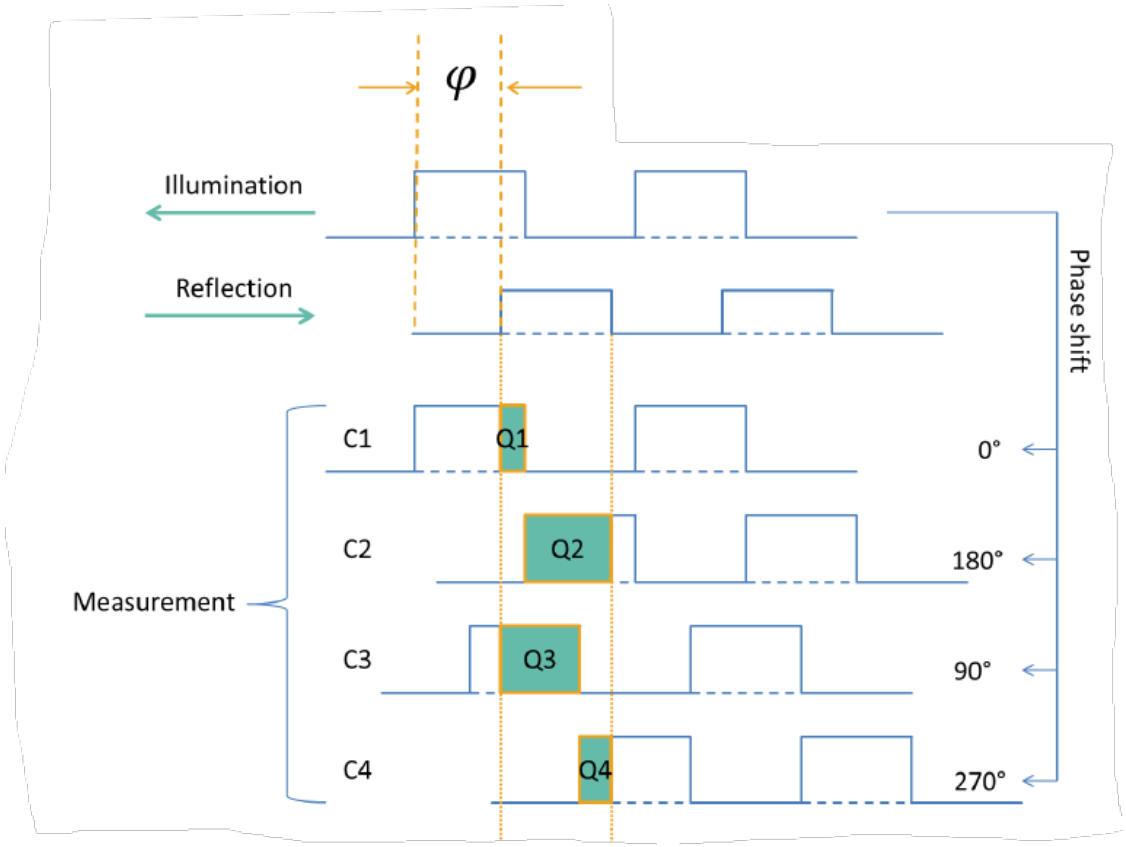

$$\varphi = arctan\left(\frac{Q_4 - Q_3}{Q_1 - Q_2}\right)$$

$$d = \frac{c}{4\pi f} arctan\left(\frac{Q_4 - Q_3}{Q_1 - Q_2}\right)$$

Amplitude or confidence:

$$Amplitude = \sqrt{(Q_1 - Q_2)^2 + (Q_4 - Q_3)^2}$$

https://www.melexis.com/-/media/files/documents/application-notes/time-of-flight-basics-application-note-melexis.pdf

Indirect ToF four Phase Sequence

- In a 4-phase sequence, the measurement procedure must be repeated 4 times:

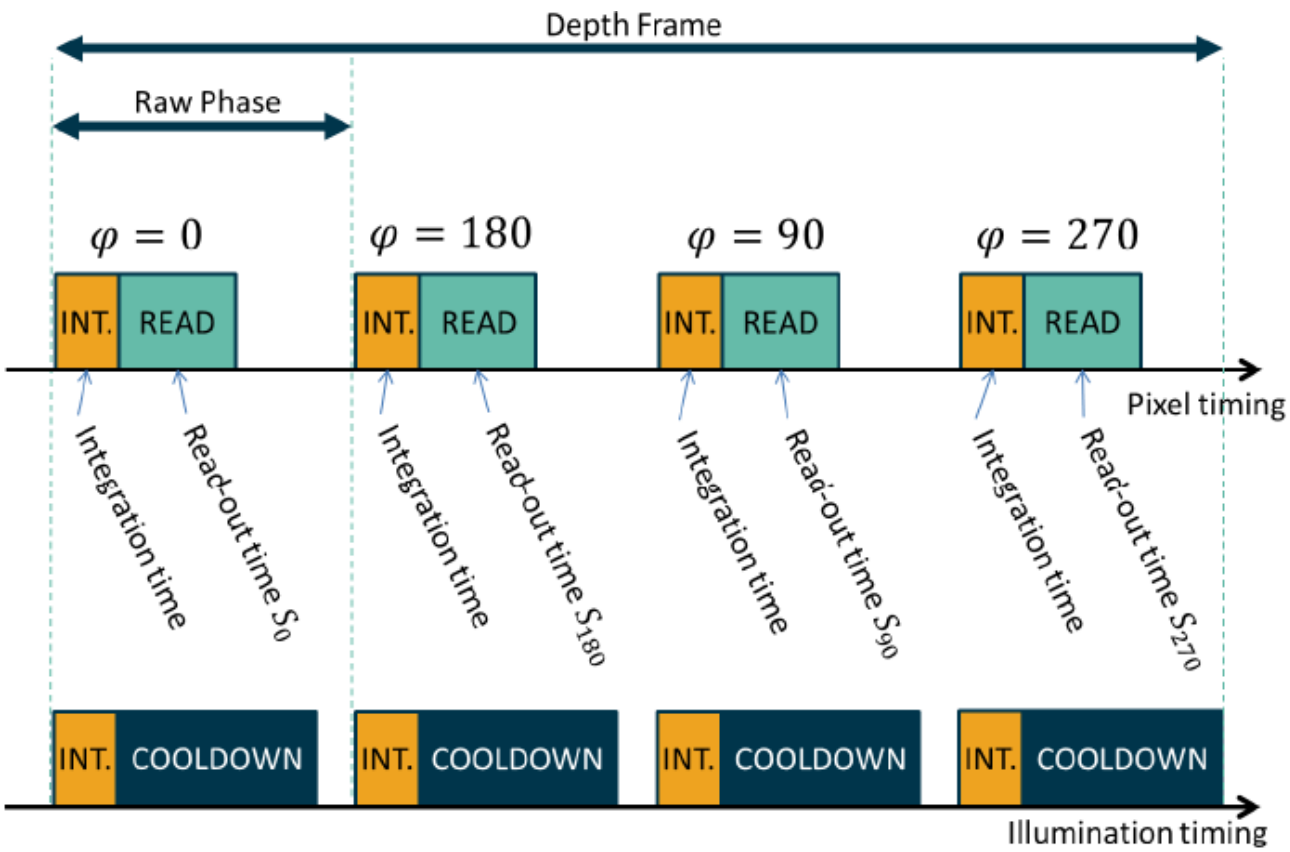

Exercise 3.4

Lock-in Detection

- Calculate the output of the mixer (A·B) when the different phase shift is Δ=0°, 90°, 180° and 270°. Call these terms Q_1, Q_3, Q_2 & Q_4 . Use the product-to-sum identify.
- What happens after the low-pass filter?
- Calculate: $arctan\left(\frac{Q_4 - Q_3}{Q_1 - Q_2}\right)$

Product-to-sum identify:

$$\sin a \cdot \sin b = \frac{1}{2}[\cos(a-b) - \cos(a+b)]$$

$$A = |A|\sin(\omega t + \varphi)$$

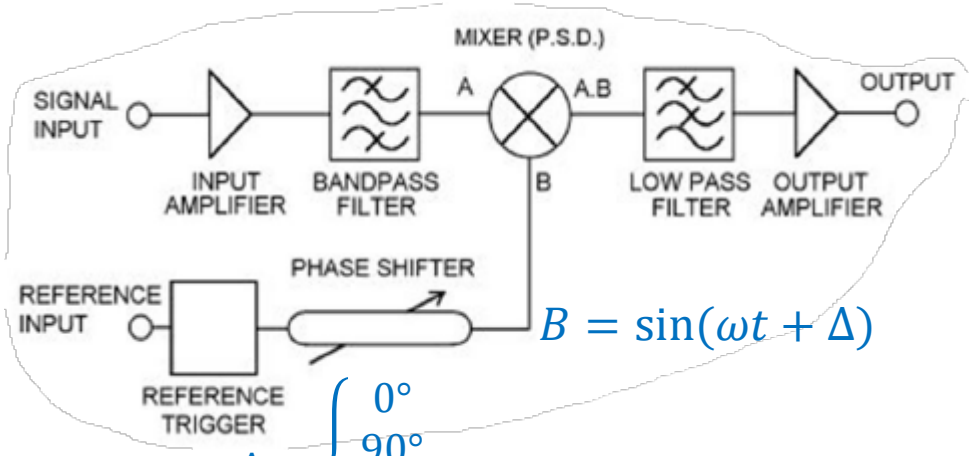

$$B = \sin(\omega t + \Delta)$$

$$\Delta = \begin{cases} 0° \\ 90° \\ 180° \\ 270° \end{cases}$$

Direct ToF - Histogram-based Architecture

Photons are counted over time to built a histogram:

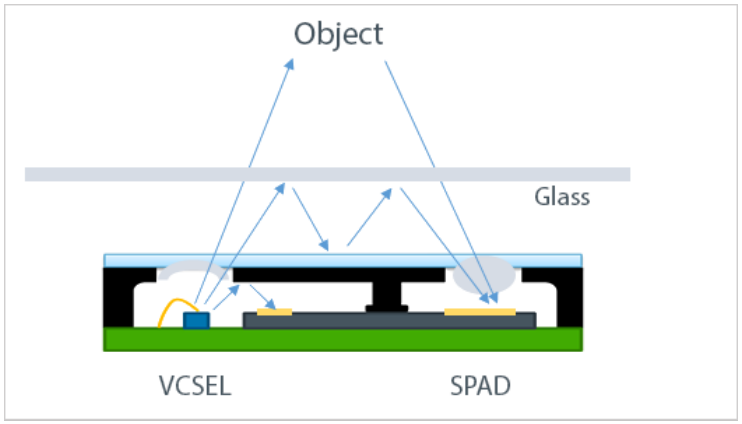

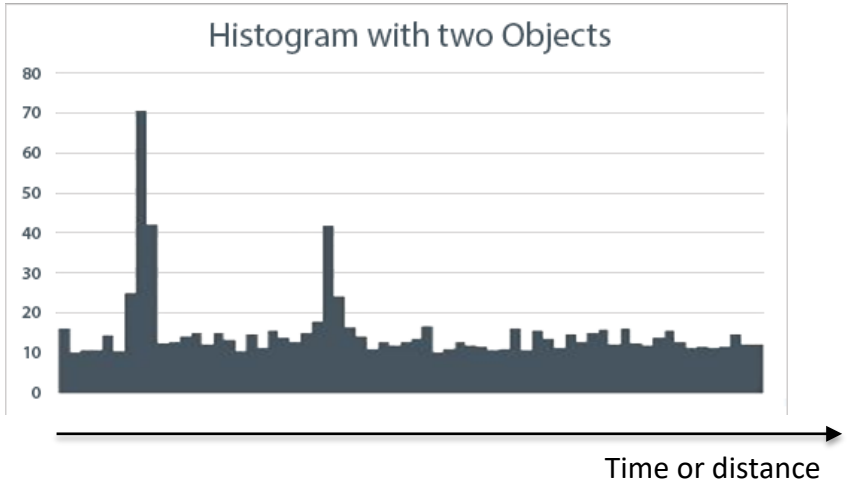

- can measure the distance from multiple objects in the field of view
- are able to detect and cancel out the effect of cover glass

ToF for Gesture

- discriminate vertical gesture from horizontal gesture

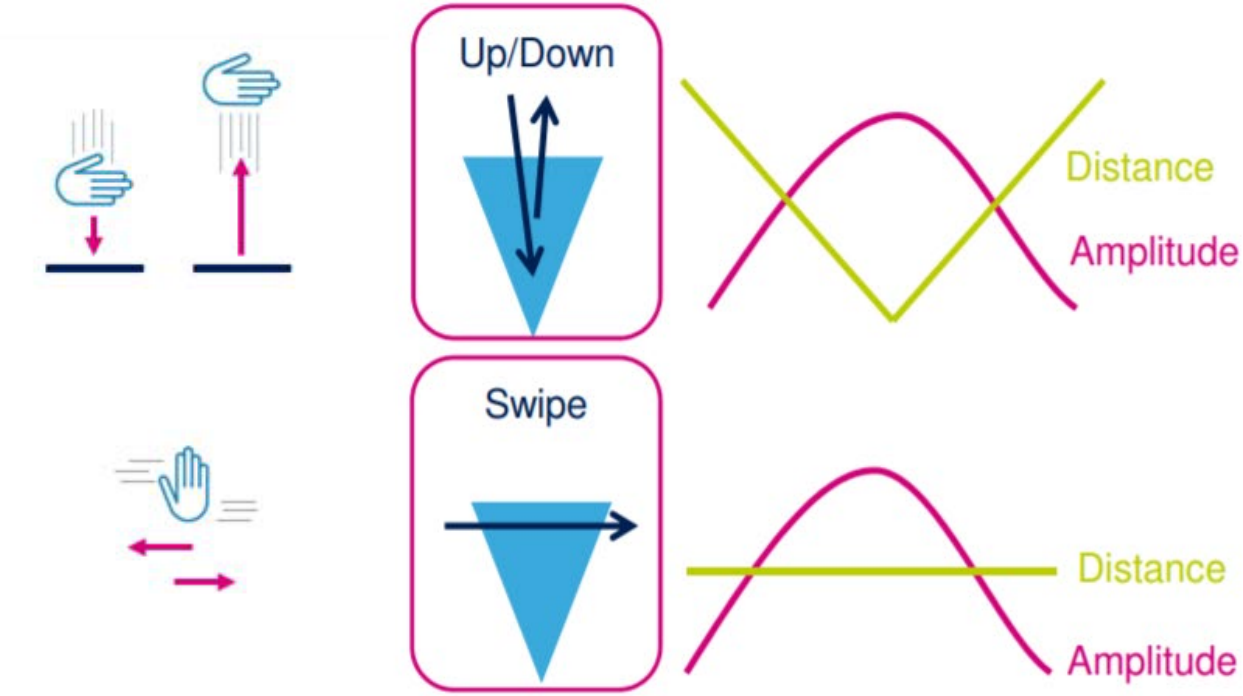

Flash LiDAR or ToF Camera

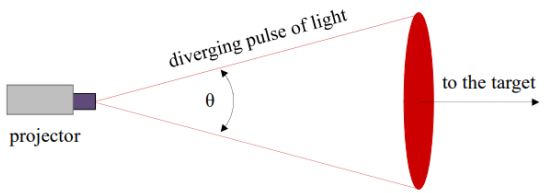

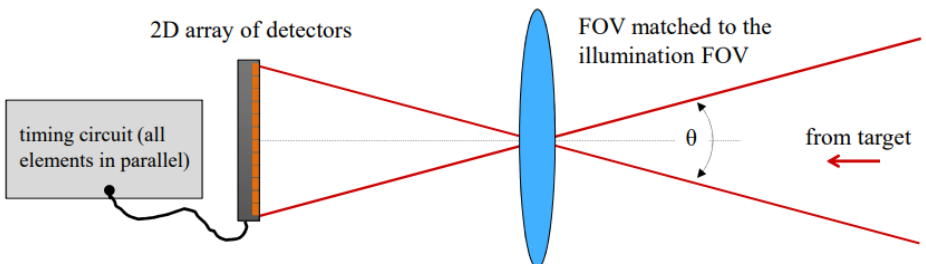

SR4000
Mesa Imaging
176 x 144 pixel

Image sensor die – Cross-section

(Source: Apple IpAD Pro LiDAR Module structural, process & cost report, System Plus Consulting, 2020)

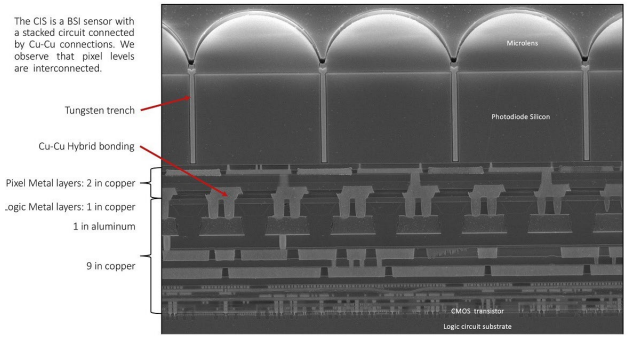

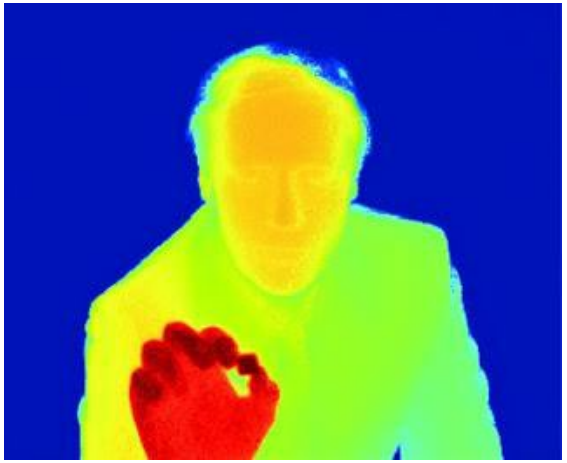

https://hub.hamamatsu.com/sp/hc/resources/SiPM_SPAD_%20Emerging_Applications.pdf

Summary

ToF Sensors allow:

- Day and night measurements
- High distance accuracy (≈1%)
- Fast system response (135 frame/s)
- Low power consumption
- Low cost
- 1D to 3D measurements

Hamamatsu: P12347-01CT

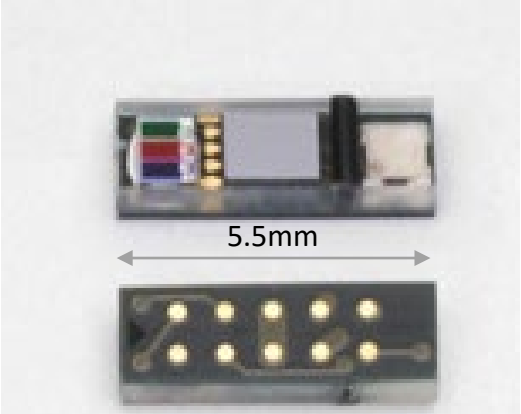

color, illuminance & proximity sensor

Exercise 3.5

TOF &ALS general Comprehension

1. TOF Sensors are disturbed with intense light sources like the sun for example. Look at the sun radiation spectrum at see level and determine what wavelength would be the most appropriate to use?
2. What is the typical wavelength that is used for an IR remote controller?
3. The ToF modulation frequency is 10MHz. What is the maximum distance that is detectable without aliasing effect (unambiguous range)?
4. The noise performance (Signal to Noise ratio) of a TOF system is given at some distance. How will this evolve when you double the distance?
5. Look at the product VD6283 from STMicroelectronics.
   a) What is measured?
   b) What is light flicker and why is it problematic?
   c) What is CCT?

Smart Sensors

4. Compass

Table of Content

4.1 Introduction:

- Earth's magnetic field and North Pole
- Compass applications

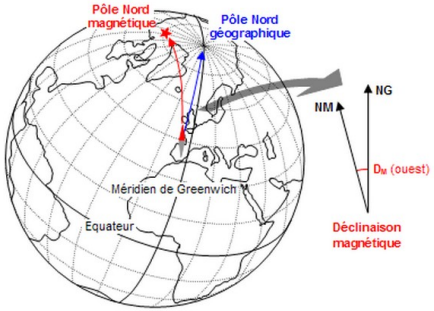

4.2 Magnetic field measurement principles:

- AMR, GMR, CMR, TMR
- Hall sensors

4.3 Compass calibration

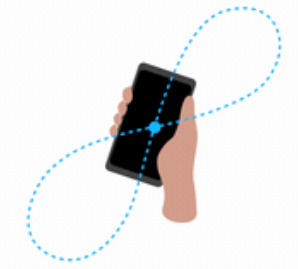

4.1 Introduction:

- Earth's magnetic field and North Pole
- Compass applications

Earth's magnetic Field

- The magnetic field lines runs from the north magnetic pole (in the southern geographic hemisphere) to the south magnetic pole (in the northern geographic hemisphere)!
- At the poles, the field lines are perpendicular to the earth's surface, at the equator they are parallel.

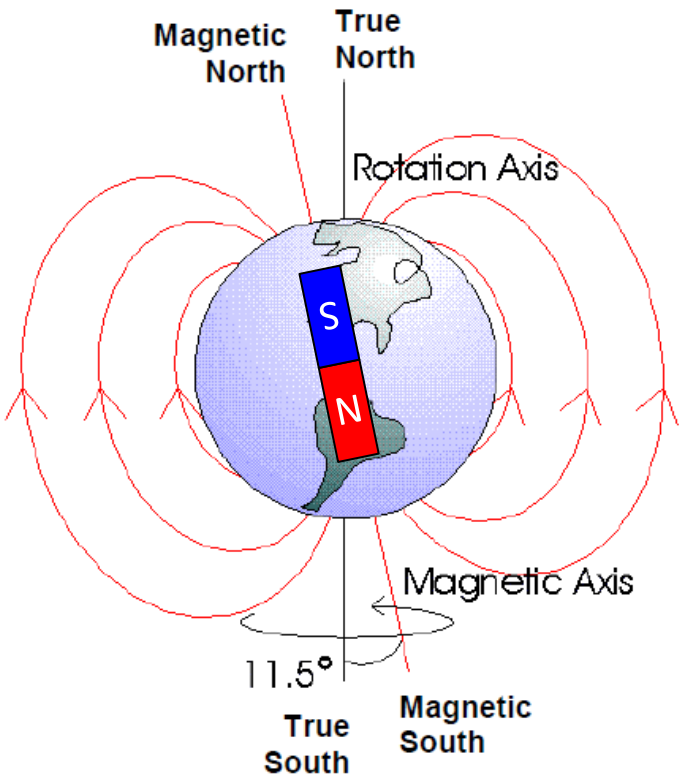

Where is the North Pole?

- The magnetic poles do not coincide with the geographical points.

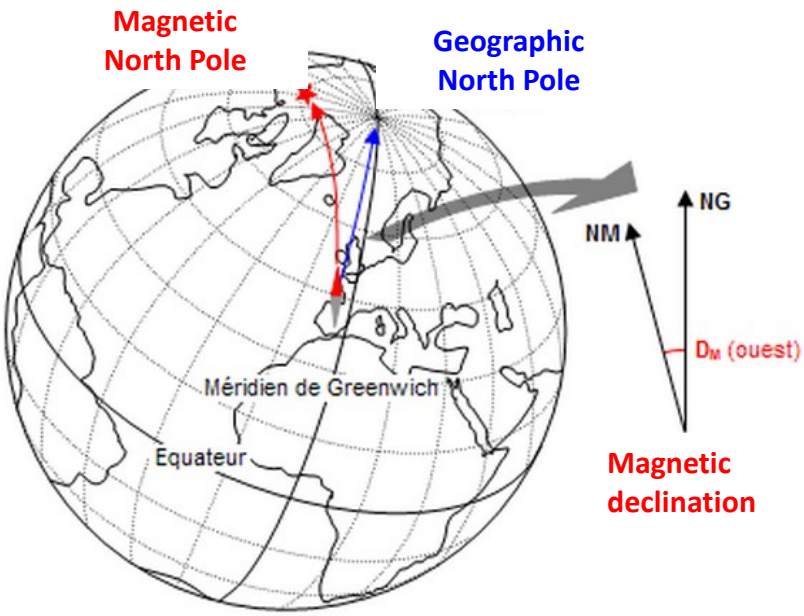

- **Declination:** angle between the geographic and the magnetic north direction
- [Declination calculator]

Earth's magnetic Field

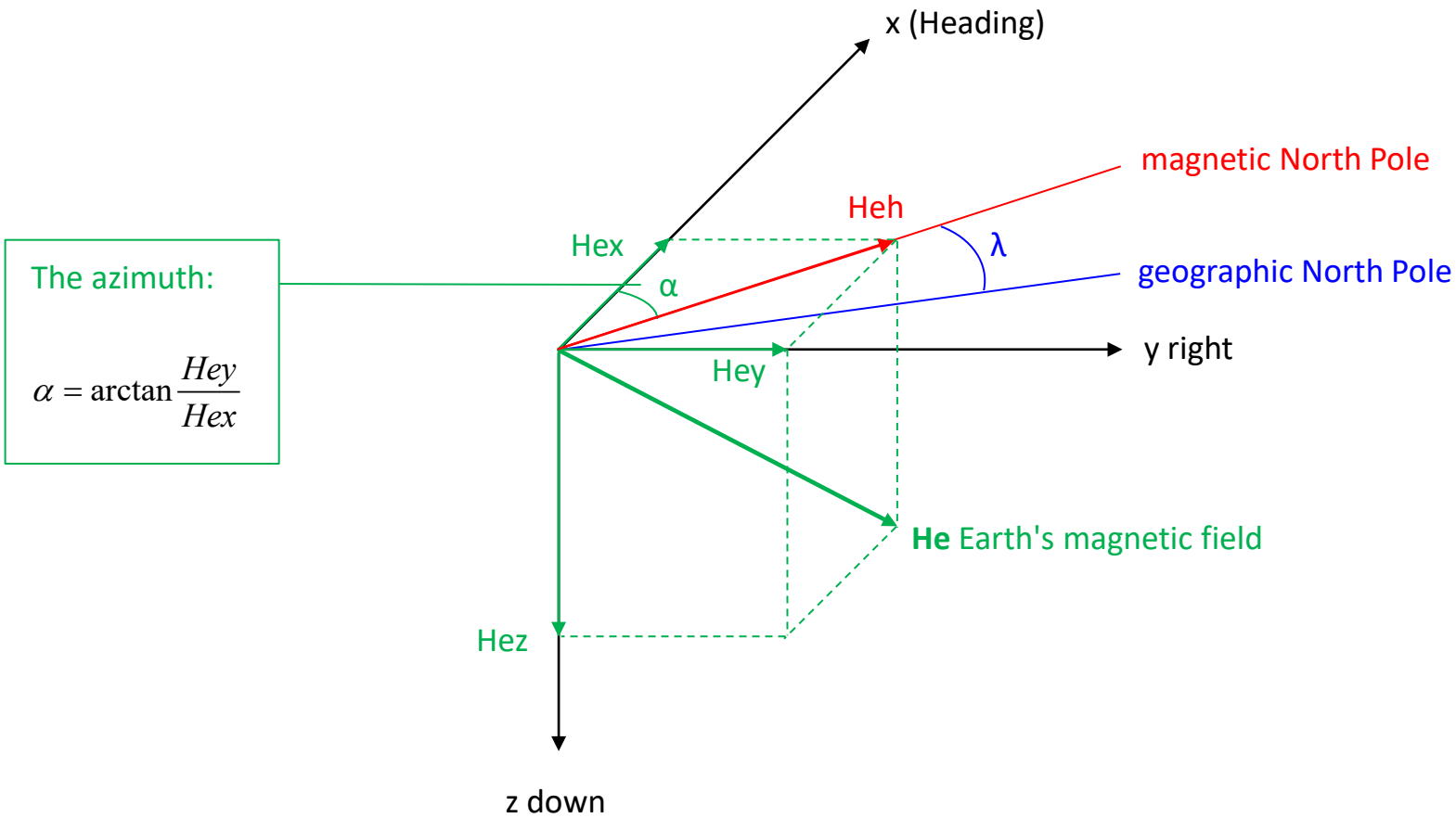

The azimuth:

$$\alpha = \arctan \frac{Hey}{Hex}$$

Exercise 4.1

What happens when your compass is not horizontal?

1) Your smartphone is facing north. Will your compass be distorted if you turn your smartphone around the **East-West** axis?

1) Votre smartphone est dirigé vers le nord. Est ce que votre boussole est faussée si vous pivotez votre smartphone autour de l'axe **est-ouest**?

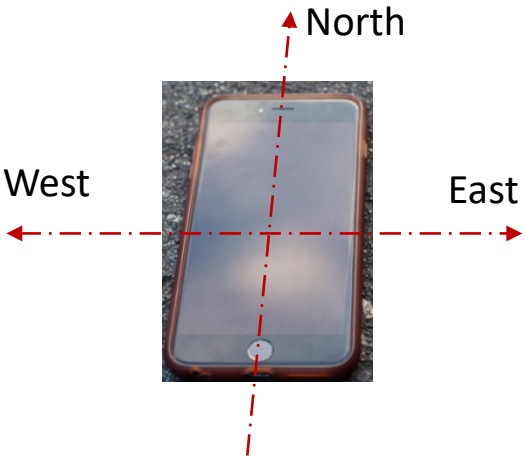

2) And when you rotate the smartphone around the **North-South** axis?

2) Et si vous le pivotez autour de l'axe **nord-sud**?

Electronically gimbaled compass

- To compensate for the unevenness of the compass, an acceleration sensor is used:

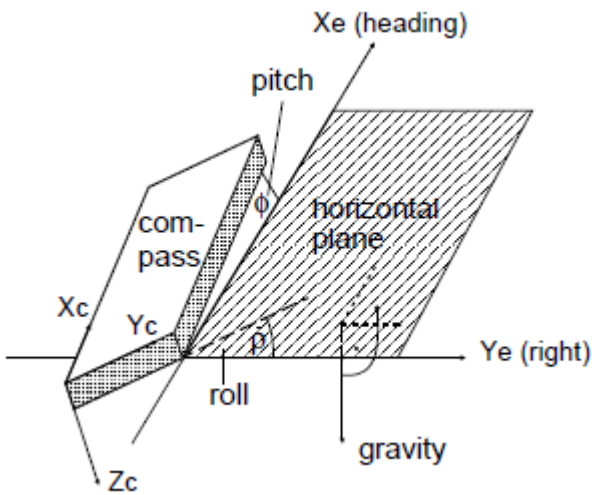

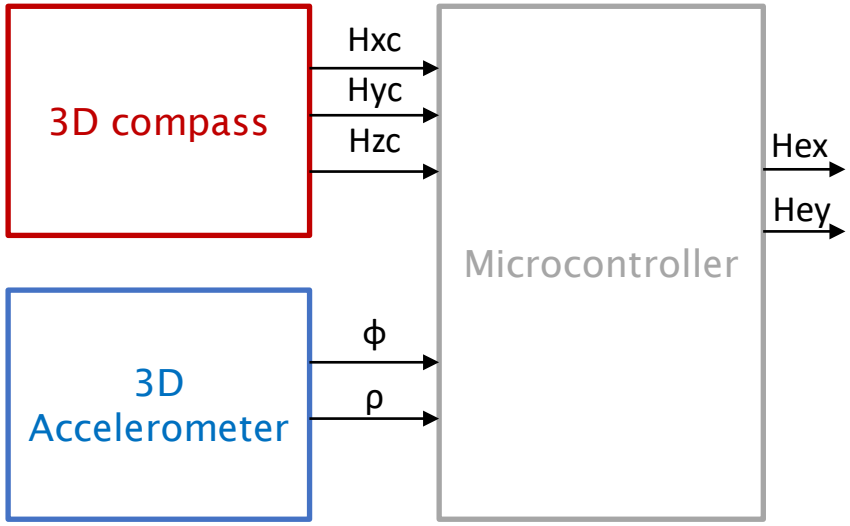

$$\begin{cases} Hex = Hxc \cdot \cos\phi - Hyc \cdot \sin\phi \cdot \sin\rho - Hzc \cdot \sin\phi \cdot \cos\rho \\ Hey = Hyc \cdot \cos\rho + Hzc \cdot \sin\rho \end{cases}$$

- Thus, the pitch angle ϕ and the roll angle ρ can be determined.

Electronic Compass Design using
KMZ51 and KMZ52, APPLICATION NOTE, Philips Semiconductors, p.33

Application Example: Augmented Reality

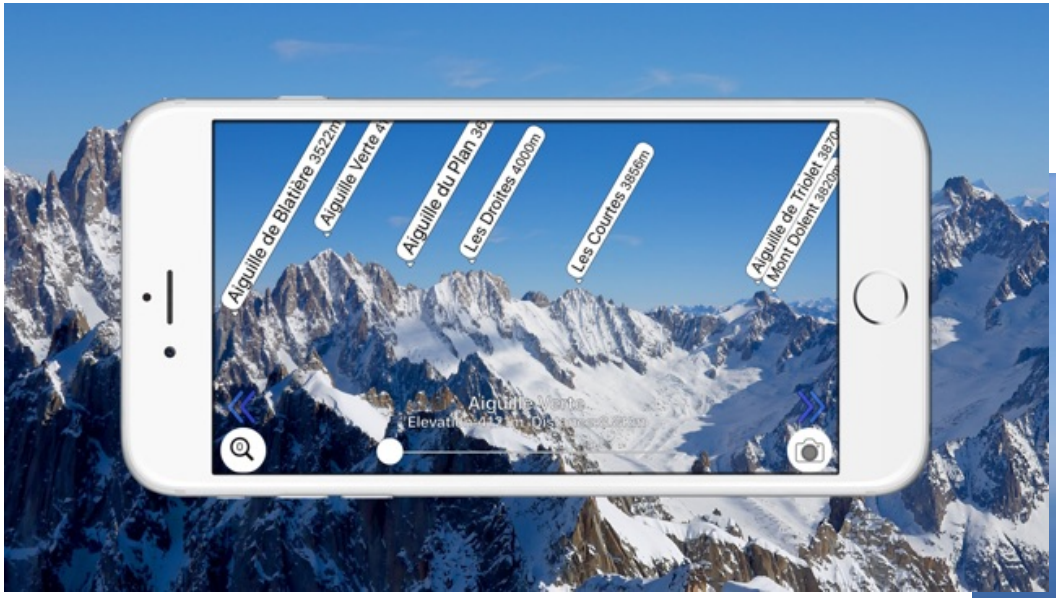

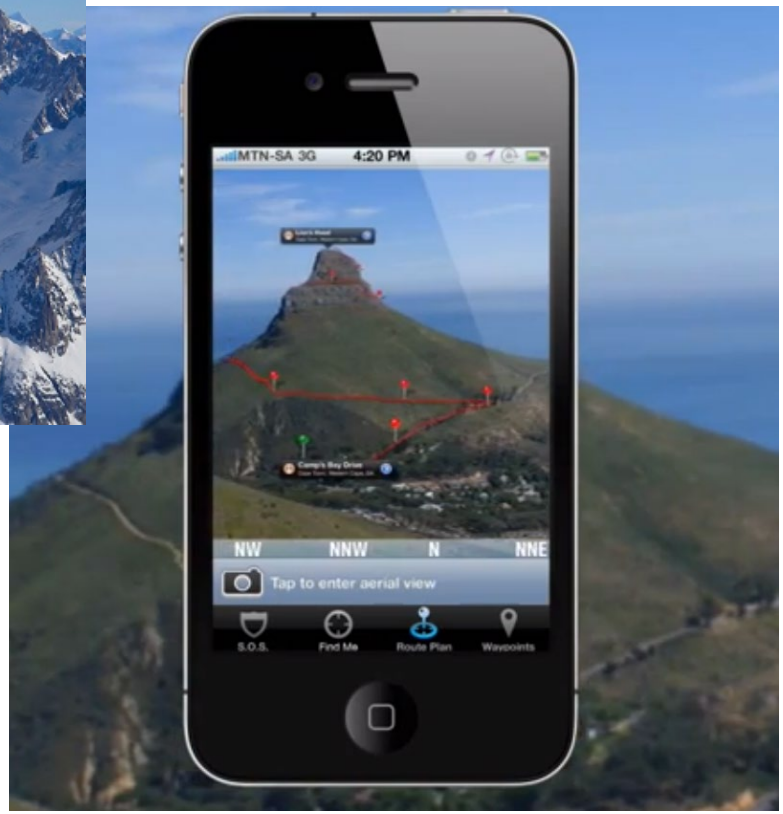

Application Example: Angle Sensors

- An analog angle sensor is created when a permanent magnet is rotated over a right-angled arrangement of two magnetic sensors.

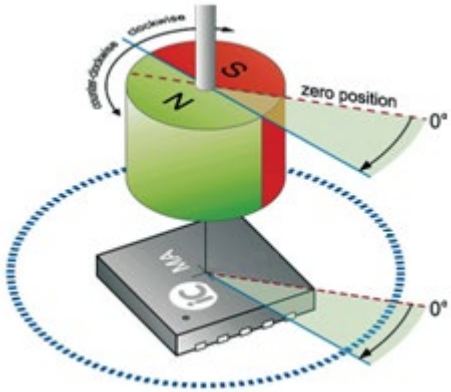

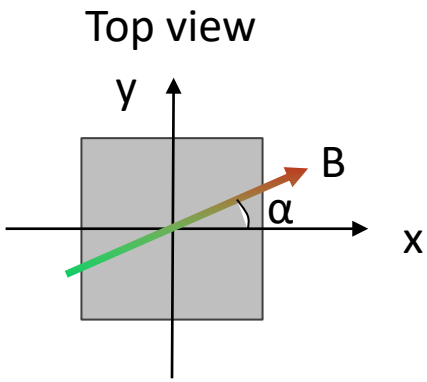

$$\begin{cases} B_x = B\cos\alpha \\ B_y = B\sin\alpha \end{cases} \Rightarrow \alpha = \arctan\left(\frac{B_y}{B_x}\right)$$

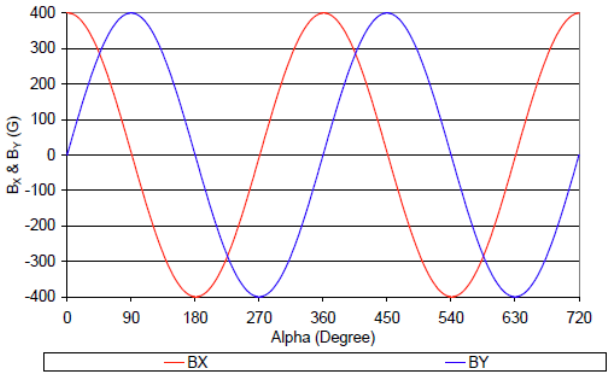

Sensors and their magnetic Field Sensitivities

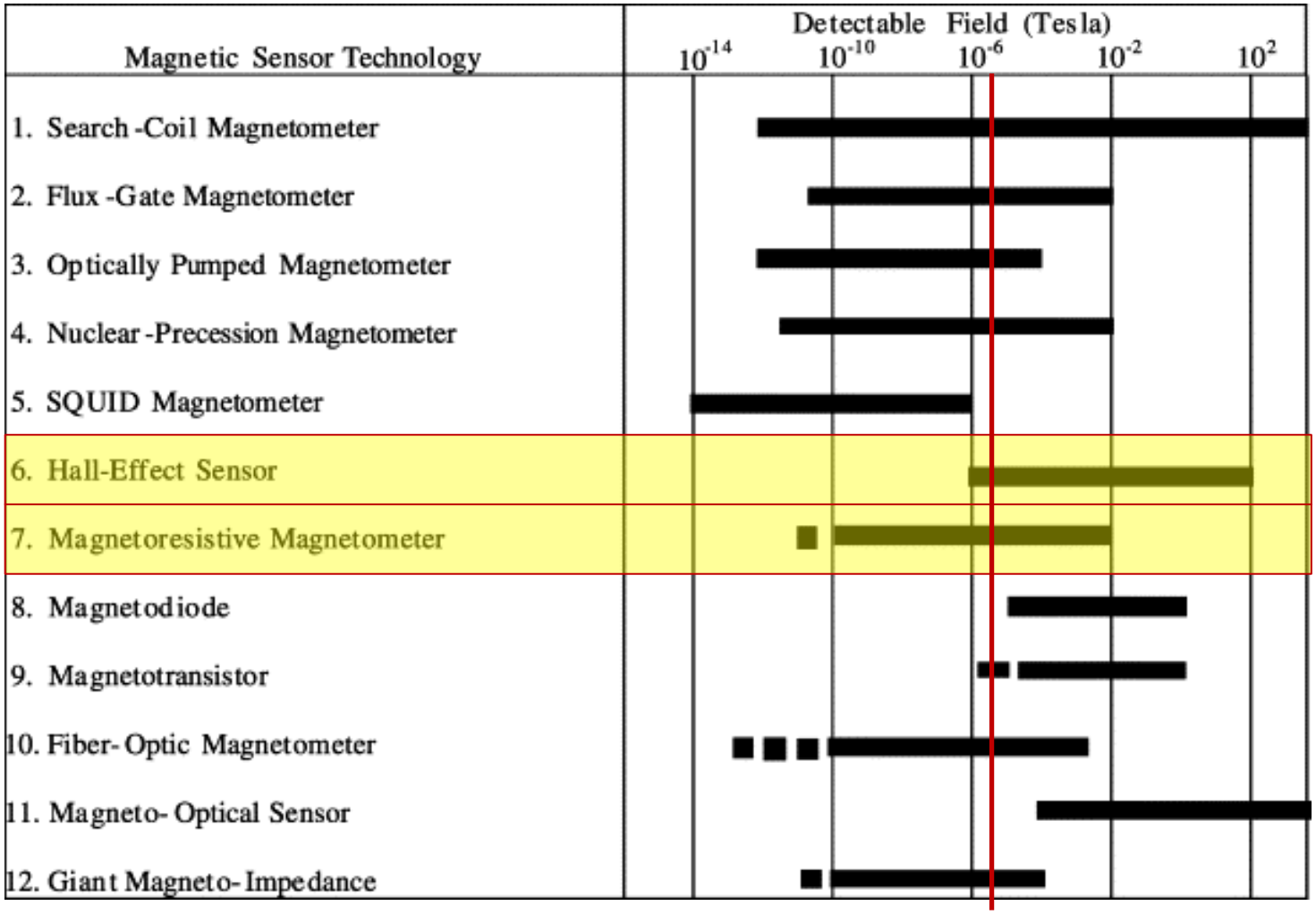

4.2 Magnetic Field Principles

- AMR
- Hall Sensors

The anisotropic magnetoresistive Effect (AMR)

- Magnetoresistive means that there is a relationship between the magnetic field and the electrical resistance R.
- Magnetoresistive sensors consist of thin ferromagnetic metal layers, e.g. permalloy (89%Ni, 11%Fe).
- A magnetic field strength ±Hy leads to a rotation of the magnetization M and thus results in a decrease in resistance.
- θ: Angle between the internal magnetization M and the current direction i.

$$R(H_y) = R_0 + \Delta R \cos^2 \theta$$

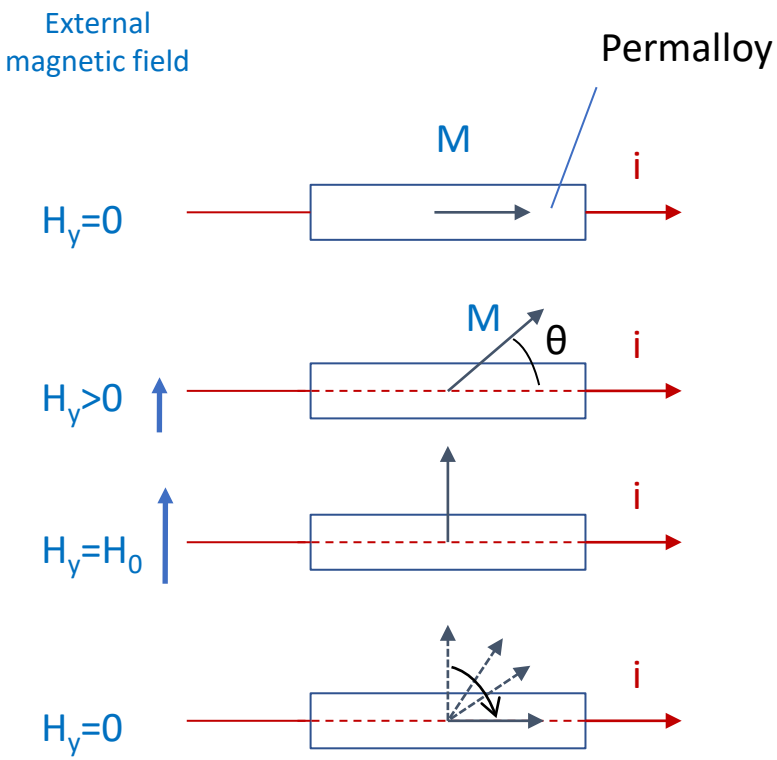

The anisotropic magnetoresistive Effect (AMR)

$$R(H_y) = R_0 + \Delta R\left[\cos^2\theta\right] = R_0 + \Delta R\left[1 - \left(\frac{H_y}{H_0}\right)^2\right]$$

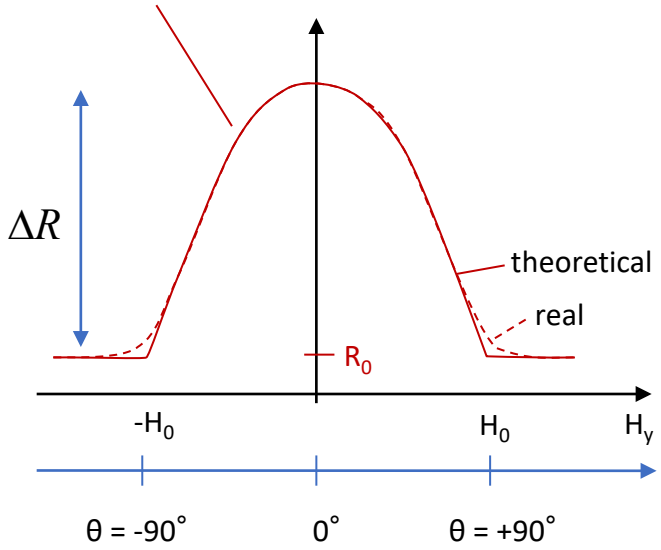

Properties of AMR sensors:

- Mirror symmetry ⇒ Sensor cannot detect sign of Hy
- non-linearity
- low sensitivity dR/dHy at low Hy

+ works up to high frequencies (1MHz)

The anisotropic magnetoresistive Effect (AMR)

Solutions:

M is rotated out in the y-direction by **superimposing a constant bias field H_B**. Disadvantage of the method: extremely stable bias field H_B required.

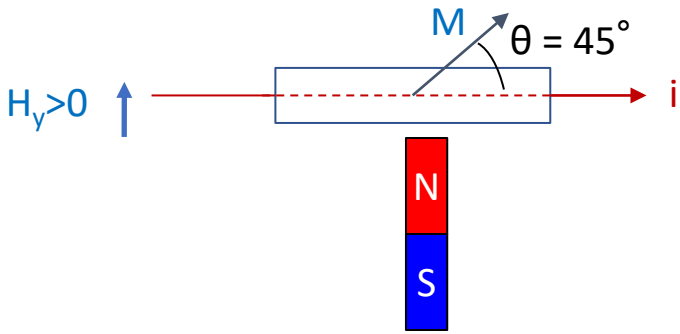

Better method: **direction of i** is rotated out of the direction of the easy magnetic axis by geometric measures = Barber pole

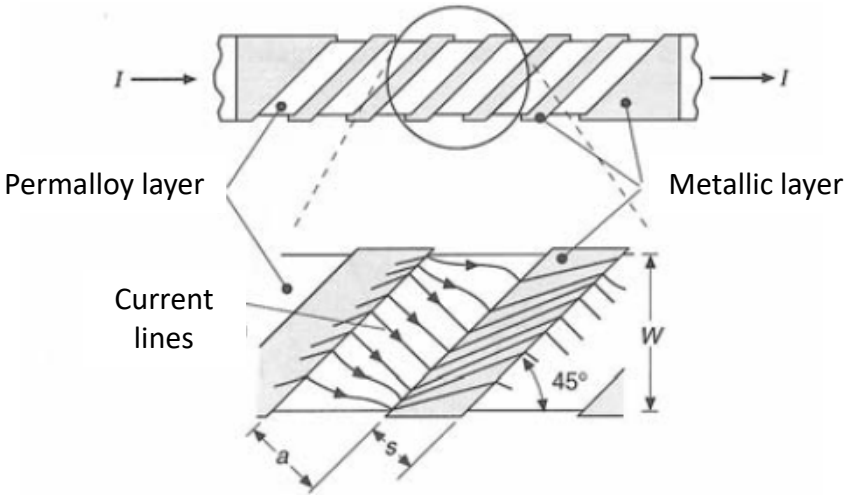

The anisotropic magnetoresistive Effect (AMR)

- The current flows along the shortest path from strip to strip, i.e., it is now rotated by 45° in the permalloy. When H_y=0 there is an angle of 45° between current (i) and magnetization (M).

Properties of the characteristic:

+ not symmetrical

+ for $H_y << H_0$ quasi -linear

- has the same resistance value R_0 for $H_y = 0$ and $H_y \geq H_0$

$$R(H_y) = R_0 - \Delta R \frac{H_y}{H_0} \sqrt{1 - \left(\frac{H_y}{H_0}\right)^2}$$

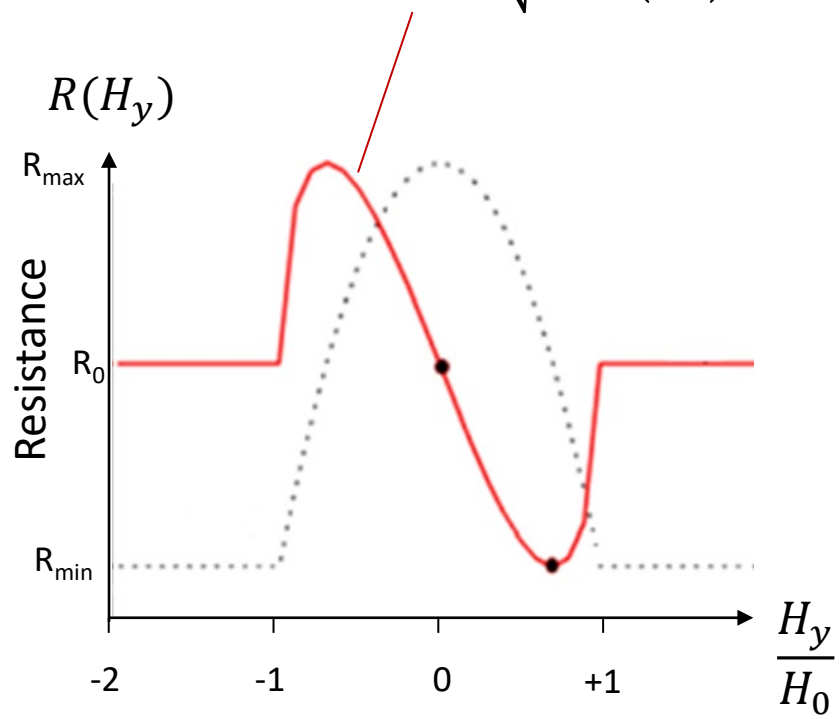

The anisotropic magnetoresistive Effect (AMR)

+45°

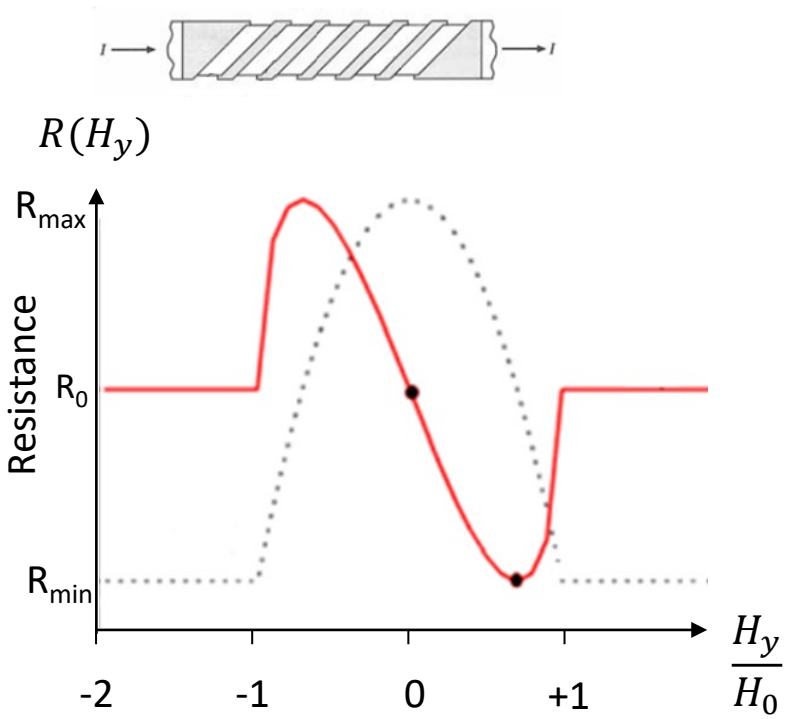

-45°

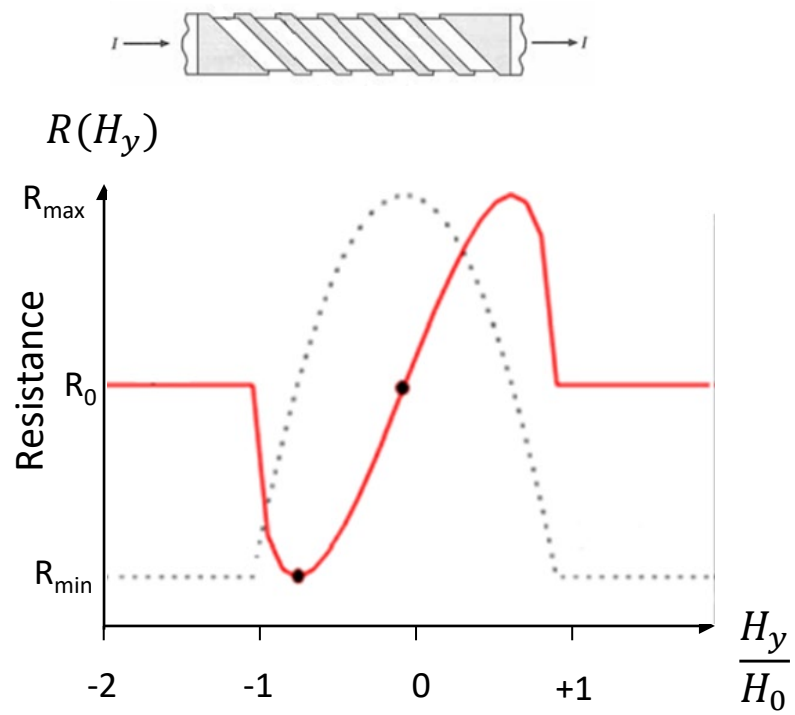

The anisotropic magnetoresistive Effect (AMR)

Wheatstone full bridge circuit:

The Barberpole strips are arranged in opposite directions across both resistors of a half-bridge, so that when the magnetic field increases, one resistor increases, while the other decreases.

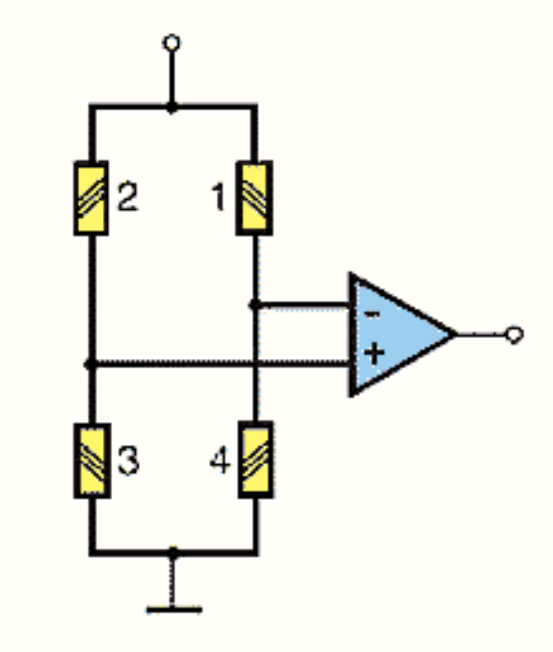

+ Thermal errors are reduced by arranging the MRS as a miniaturized Wheatstone bridge circuit.

Exercise 4.2

AMR Compass

1) The earth's magnetic field is 37.96 A/m in Bern. The inclination of this field (angle with respect to the horizontal plane) is 62.8°. What is the magnetic field that you measure with a compass when you drive North?
2) You measure this field with an AMR sensor which has a sensitivity of 80mV/(kA/m). How much is the output signal?
3) You are now using a 2D sensor to measure this field. The x* sensor has an offset Vox=14µV. The y sensor has no offset. What effect does Vox have on the azimuth calculation when you go North? And when you are heading East?

1) Le champ magnétique terrestre est de 37.96 A/m (valeur Bern). L'inclinaison de ce champ (angle avec l'horizontale) est de 62.8°. Quelle est la valeur du champ magnétique que vous mesurez avec une boussole lorsque vous vous déplacer vers le Nord?
2) Vous mesurez ce champ avec un capteur AMR qui a une sensibilité de 80mV/(kA/m). Quelle est la valeur de sortie?
3) Vous utilisez maintenant un capteur 2D pour mesurer ce champ. Le capteur x* a un offset Vox=14µV. Le capteur y n'a pas d'offset. Quel est l'effet de Vox sur le calcul de l'azimut lorsque le cap suivi est plein nord? Et plein est?

* x is the driving direction

* x correspond à votre cap/direction suivie

Hall Effect

- The Hall effect occurs when an electric current (i) flows through a conducting plate experiencing a perpendicular magnetic field (B).
- The electric current is deflected by the Lorentz force (F_L), resulting in a charge excess on one side of the conductor.

Lorentz force: $\vec{F}_L = \vec{I}d\vec{l} \times \vec{B}$

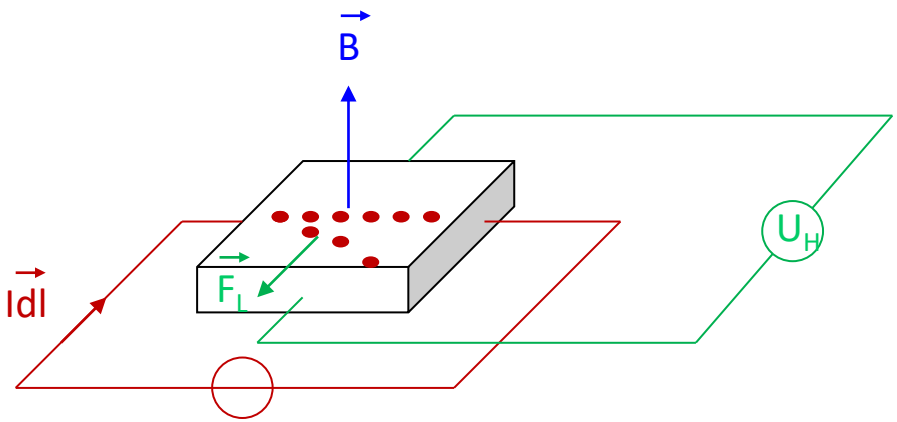

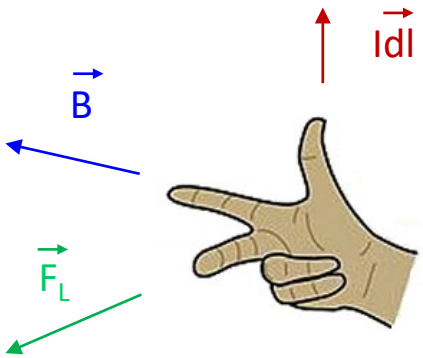

- The resulting electrical field (E) also exerts a force on the electrons. An equilibrium occurs when the two effects just cancel each other out.

$F_{el} = -qE$

Hall Voltage

Therefore, a voltage can be measured

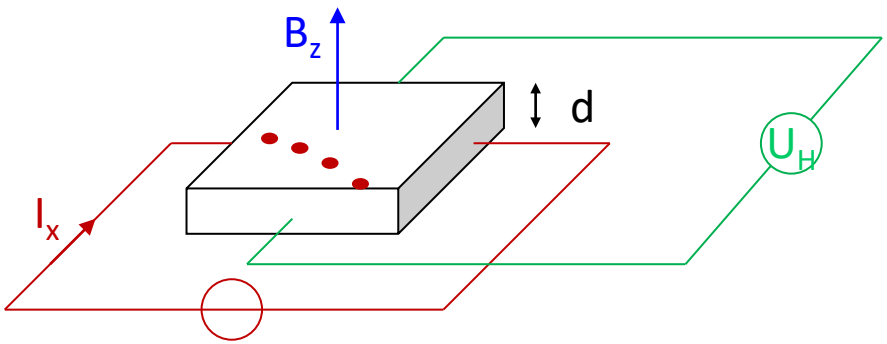

Hall Voltage

$$U_H = \frac{R_H B_z}{d} I_x$$

R_H: Hall constant
I_x: Electric current
B_z: Magnetic flux density
d: Dicke des Materials

	R_H [m³/As]
Ge	$-8.0E^{-3}$
In	$-7.0E^{-3}$
InSb	$-0.24E^{-3}$
InAs	$-0.1E^{-3}$
Si	$+ 1E^{-3}$-$100E^{-3}$

Realised in CMOS technology:

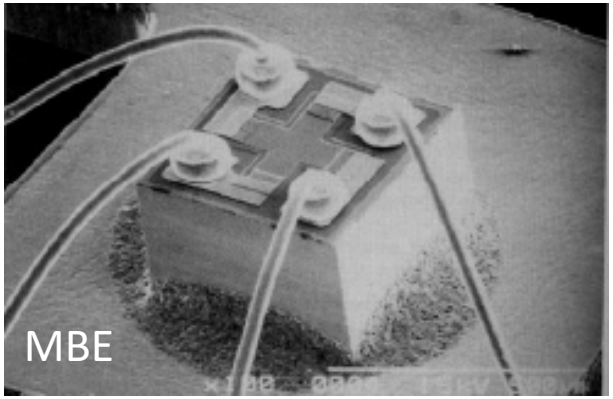

https://cds.cern.ch/record/1334470/files/423.pdf

Offset in a Hall Sensor

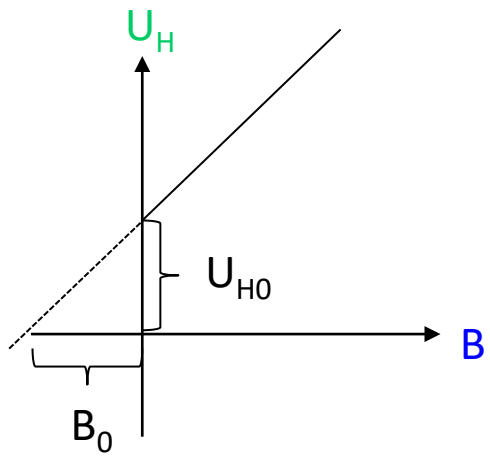

Typical value:
5 - 50mT!

Cause:

- Geometry
- Doping
- Temperature gradient
- Mechanical stresses (piezoresistance)
- Effects on the surface

https://www.greyc.fr/sites/default/files/electronique/5_2007_%20Blainville_Popovic.pdf

Exercise 5.3

Hall Sensor, Offset Reduction

A Hall sensor can be modelled by a Wheatstone bridge. If no magnetic field appears, all resistors are identical. The offset is modelled by the resistance ΔR.

1) Calculate the output voltage U_{H1} (Fig.1).
2) The input voltage is now applied to two other terminals (see Fig. 2). Calculate the voltage U_{H2}.
3) How do U_{H1} and U_{H2} change when a magnetic field is applied perpendicular to the Hall sensor?

Un capteur de Hall peut être modélisé par un pont de Wheatstone. Lorsque il n'y a pas de champ magnétique, toutes les résistances sont identiques. L'offset est modélisé par la résistance ΔR.

1) Calculez la tension de sortie U_{H1} (fig. 1)
2) La tension d'entrée est maintenant appliquée à deux autres bornes (voir fig. 2). Calculez la tension U_{H2}.
3) Comment changent les tensions U_{H1} et U_{H2} lorsqu'un champ magnétique est appliqué perpendiculairement au capteur Hall?

Fig. 1

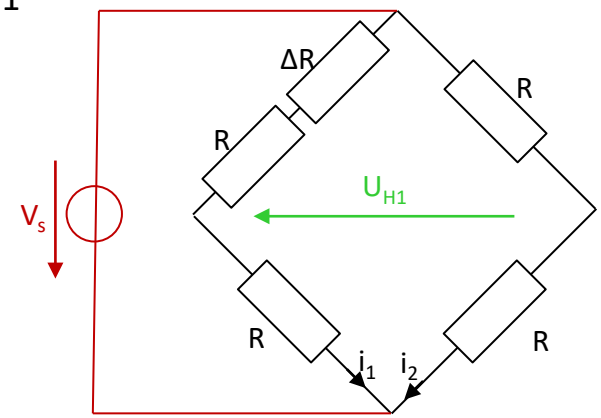

Fig. 2

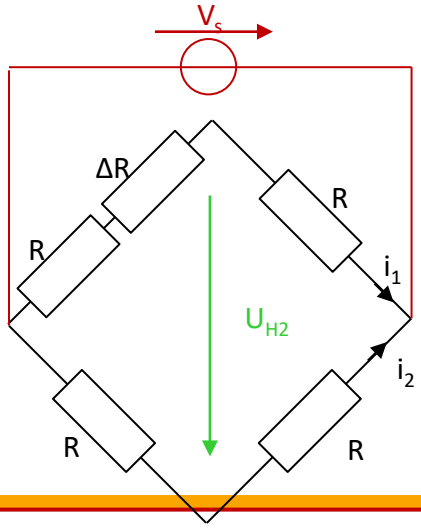

Hall Sensor

Spinning-Current Principle

- By applying the " spinning current " principle, this disadvantage is overcome

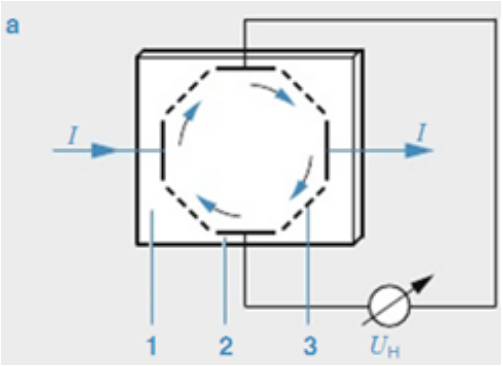

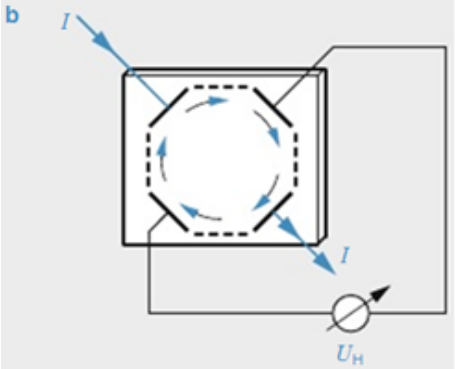

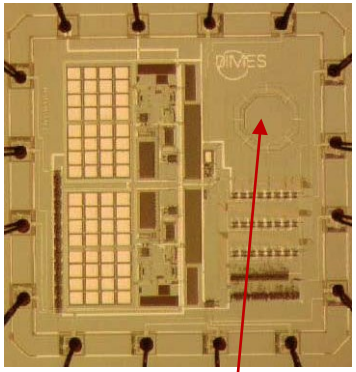

1. Semiconductor plate
2. Active electrode
3. Passive electrode

I Current supply

U_H Hall Voltage

Spinning current Hall Sensor

Hall Sensors
with « Magnetic Concentrator »

- The Hall elements are mounted on the chip in pairs at an angle of 90° to each other directly under the edge of a small ferromagnetic disc.

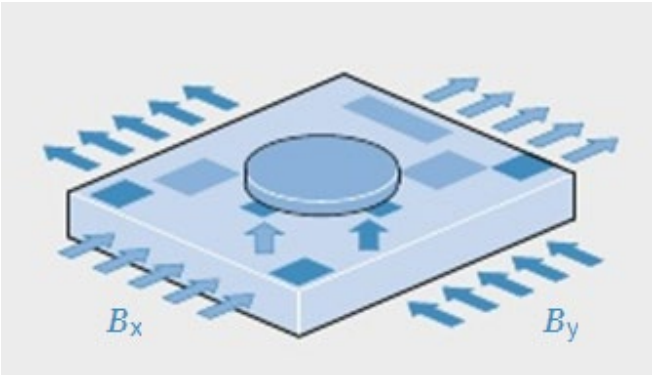

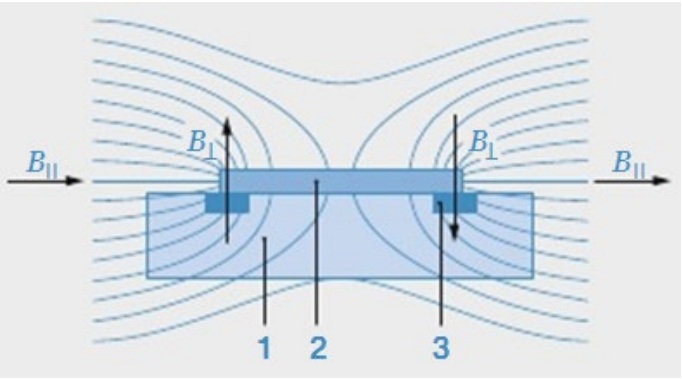

In-plane sensitivity!

- Thanks to their presence, the flux density (induction) $\mathbf{B}_{||}$ parallel to the chip surface is transformed into a flux density $\mathbf{B}_\perp$ perpendicular to it. It can be detected by the Hall sensors.

3 Axis digital Compass

AK8975/3 (Asahi Kasei Microdevices), iPhone 4,5,6

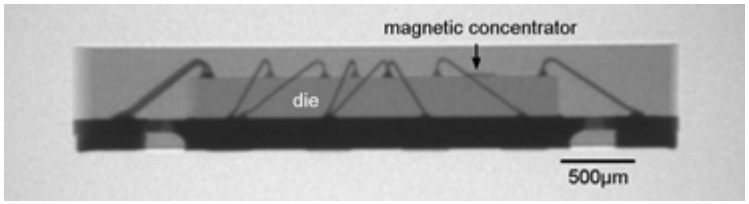

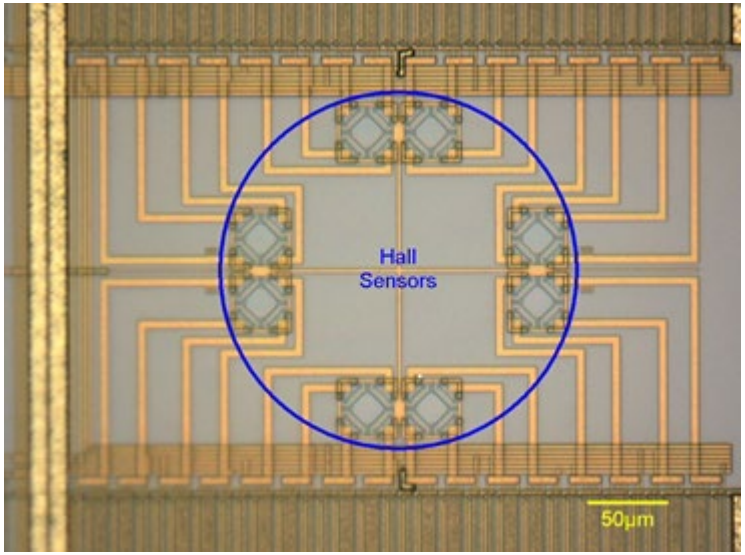

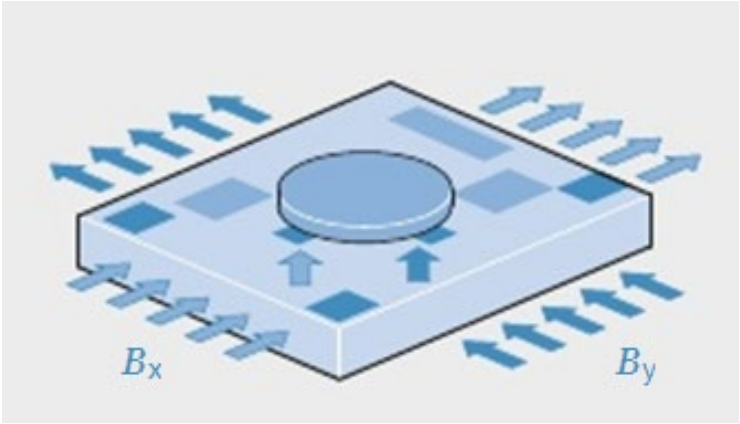

http://www.memsinvestorjournal.com/2011/02/motion-sensing-in-the-iphone-4-electronic-compass.html

4.3 Compass Calibration

Attention Interferences!

- Hard magnetic materials (permanent magnet)
- soft magnetic materials (ferromagnetic)
- Power lines

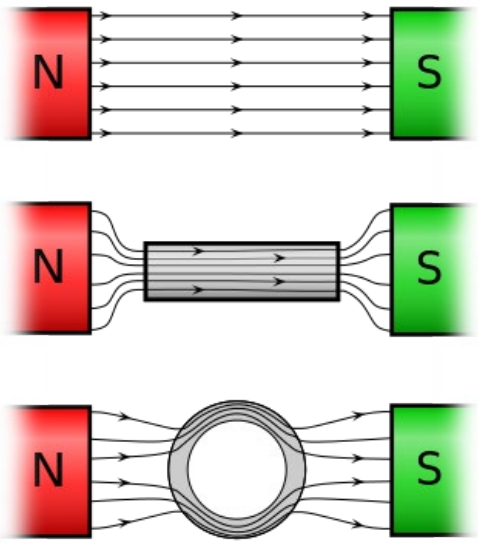

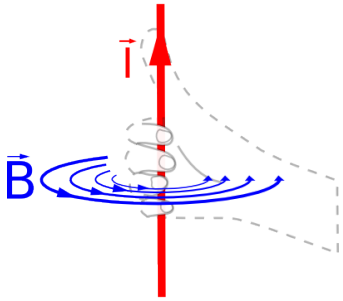

$$B = \frac{\mu_0 I}{2\pi r}$$

B: magnetic flux density
μ_0: Permeability
I: current
r: radius

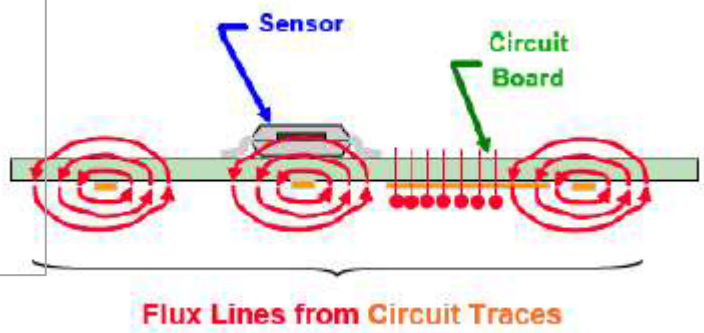

https://de.wikipedia.org/wiki/Magnetismus

Ideal Compass

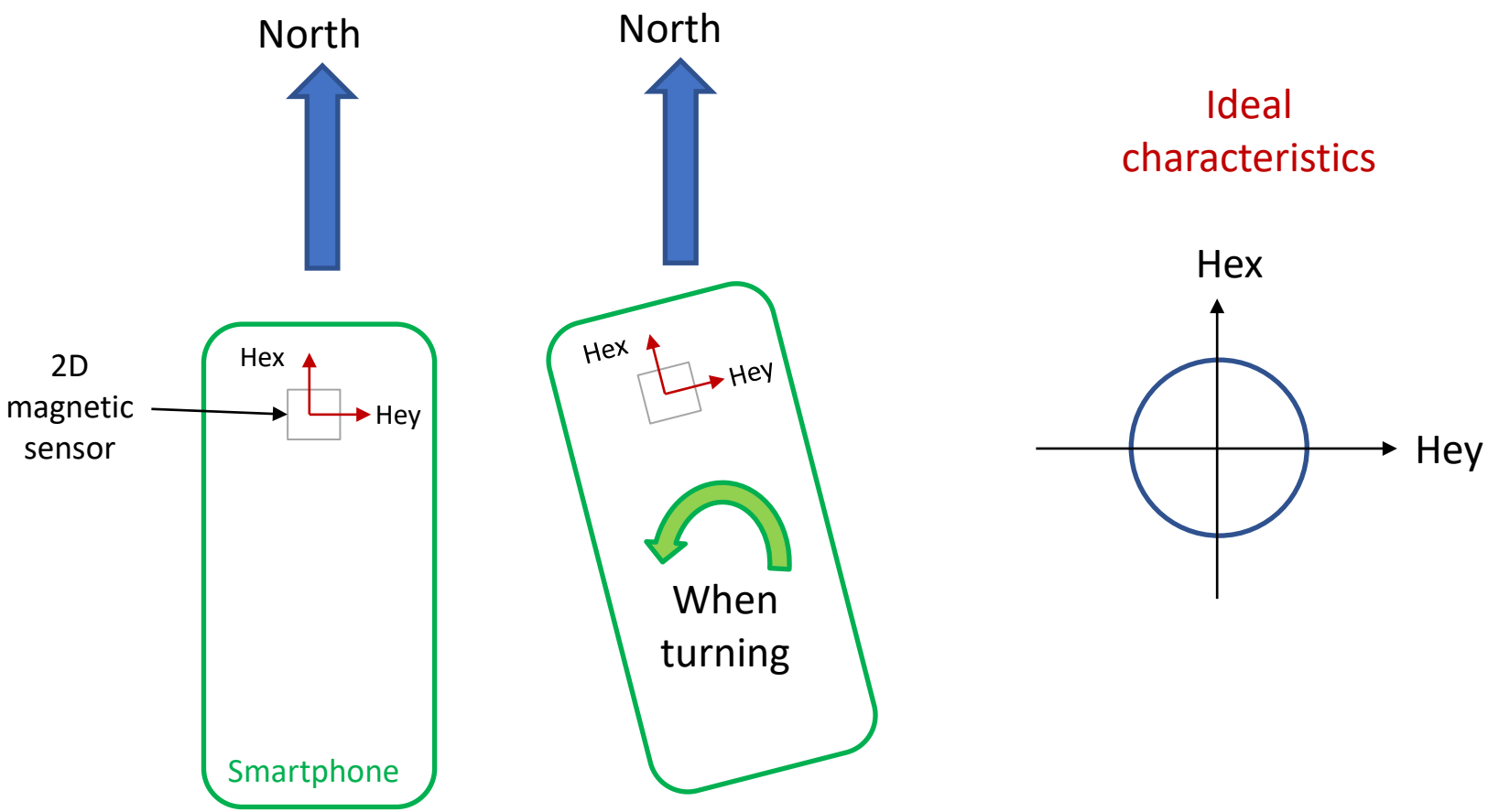

Ideal Compass
+ Hard magnetic Materials

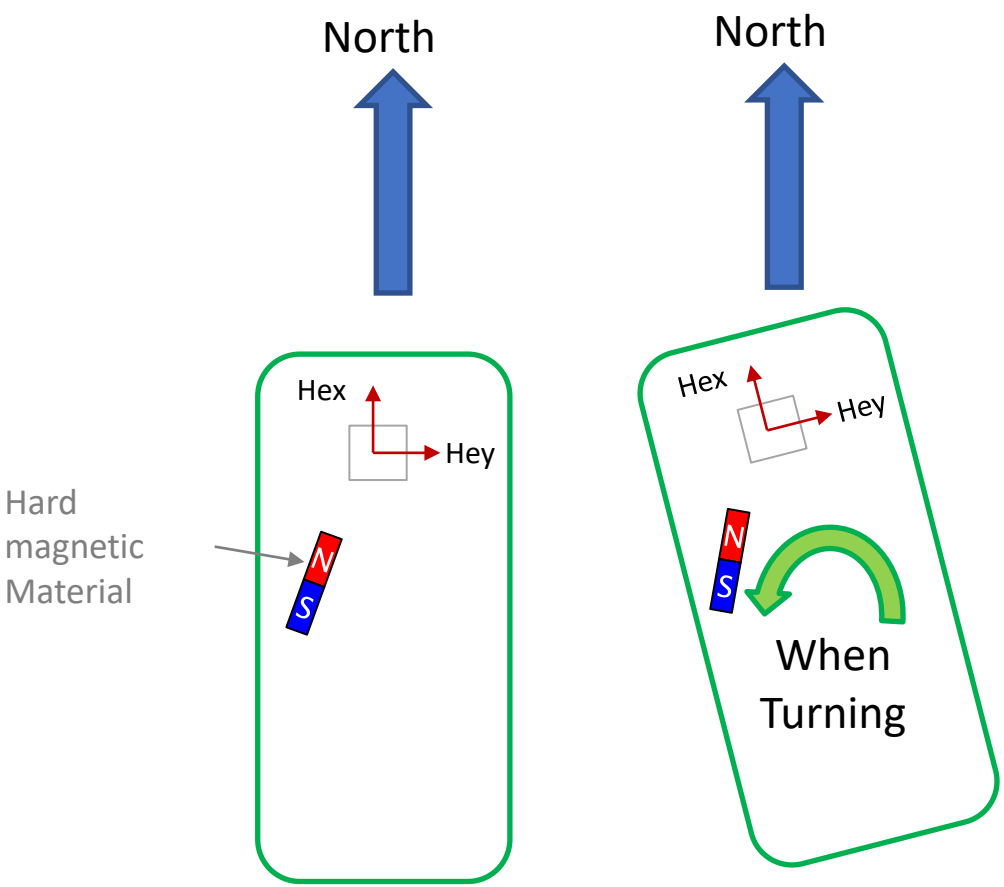

Characteristics with hard magnetic materials

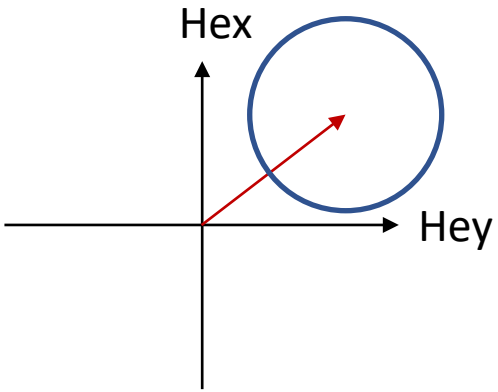

Ideal Compass
+ soft magnetic Materials

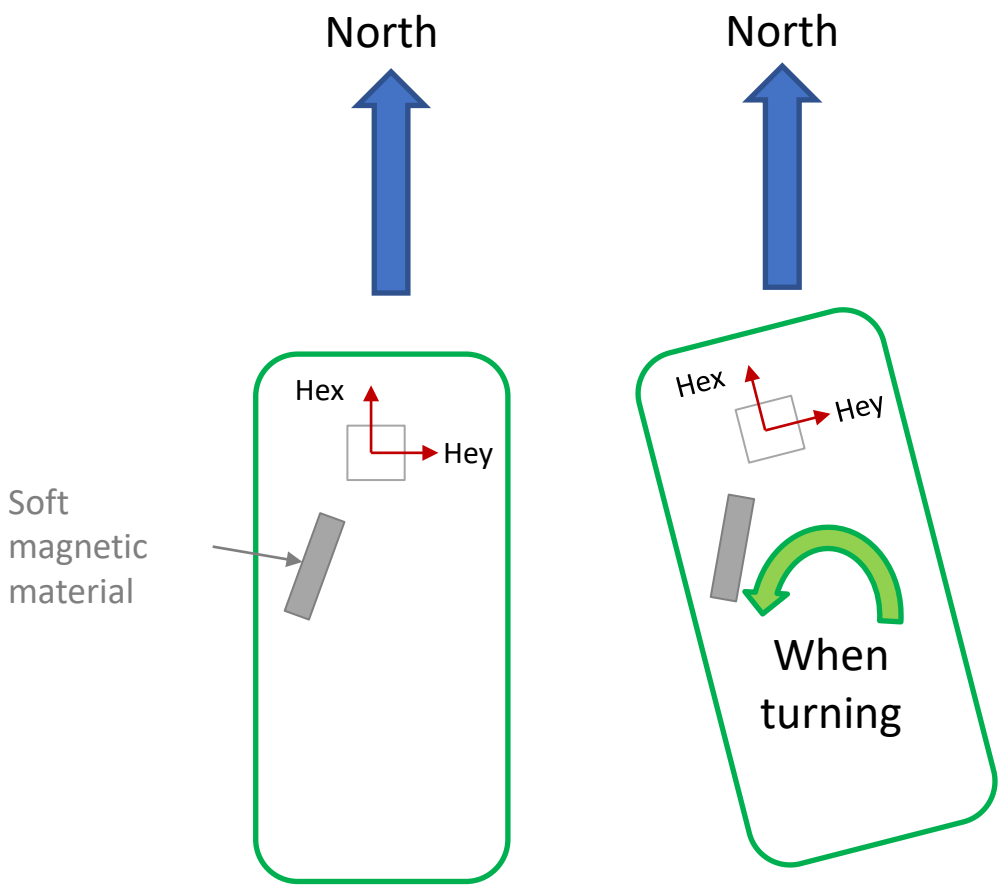

Characteristics with soft magnetic Materials

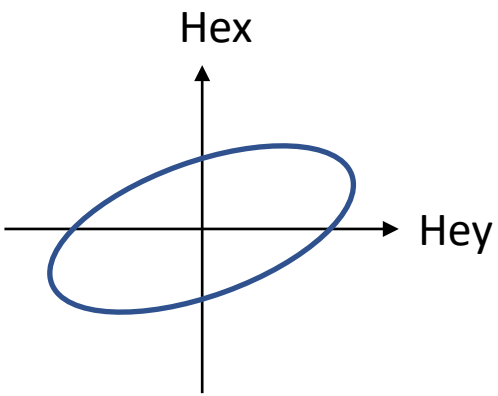

Magnetic Field Perturbation

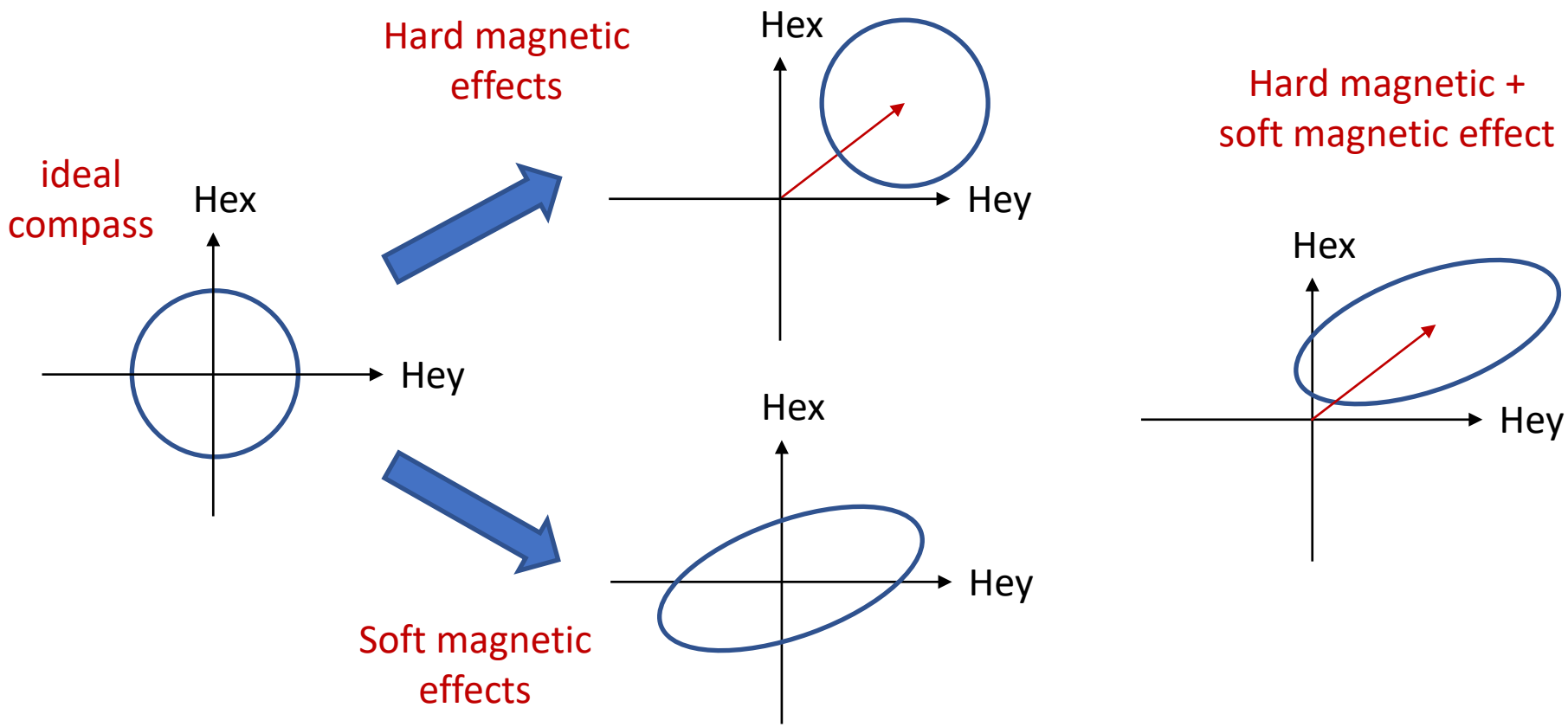

2D Calibration

Disturbances are highlighted by a 360° rotation:

Before the calibration:

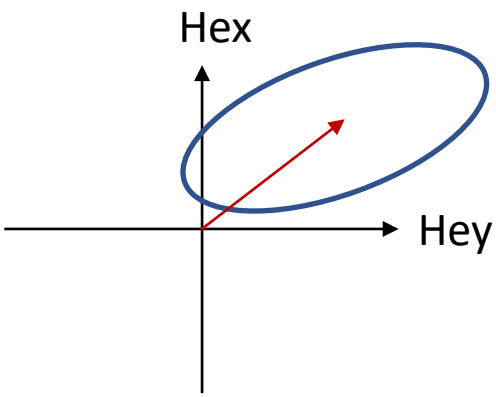

After the calibration:

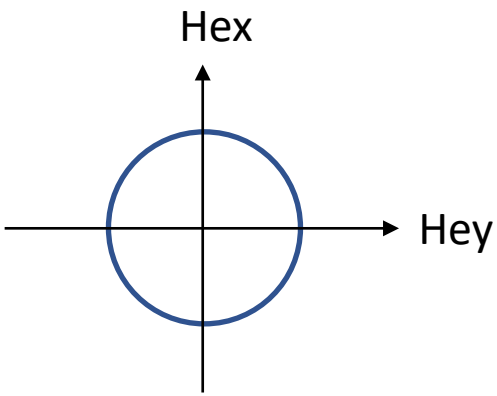

Convert the ellipse to a circle
Center the circle

3D Calibration

Figure 8 calibration:

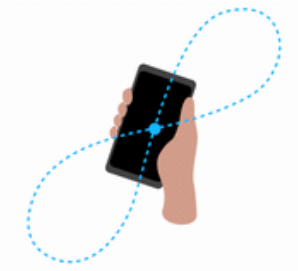

Before the calibration

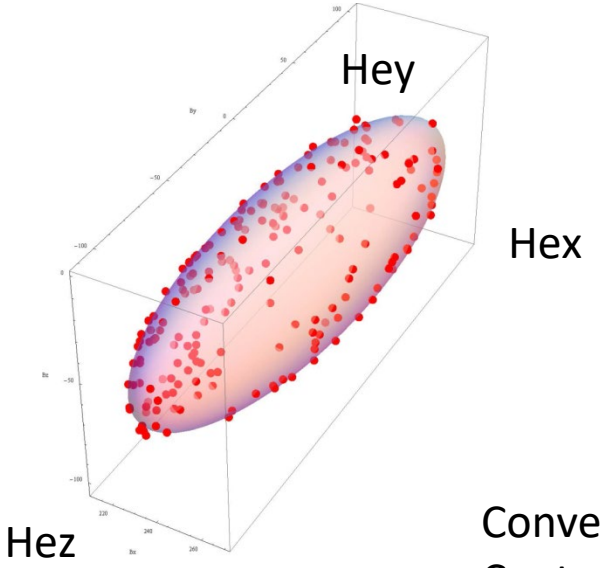

Convert the ellipsoid to a sphere
Center the ellipsoid

After the calibration:

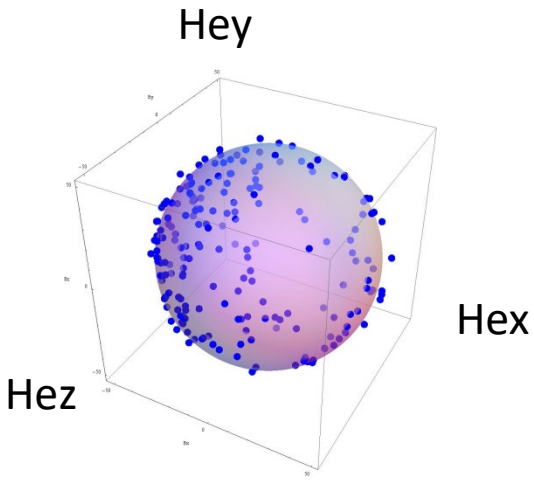

http://cache.freescale.com/files/sensors/doc/app_note/AN4246.pdf

Exercise 5.4

Magnetic Sensors in Animals

Read the following article that is also saved on moodle:

"Animal navigation: a noisy magnetic sense?, Johnsen S, Lohmann KJ, Warrant EJ., J Exp Biol. 2020 Sep 23;223(Pt 18):jeb164921. doi: 10.1242/jeb.164921. PMID: 32967977.

1) Cite at lease 5 animals presumably sensitive to the magnetic field.
2) What are (from the author point of view) the 3 mechanisms that could explain their magnetic field sensitivity?
3) Are they sensitive to the magnetic field direction, to the amplitude or both? Explain how they work.
4) Is there any amplification mechanism that could improve the magnetic cue SNR?
5) Explain what the author call multimodal cues.
6) Multimodal sensing is a kind of "smart" feature. Explain why it makes experimentation more difficult?

Energy Harvesting

(En français: Grappillage ou récupération d'énergie)

© Passeraub - 2021

Content

- A few words on the lecturer and on today's lesson
- Introduction to energy harvesting and basic considerations
- Mechanical energy harvesting
- Piezoelectric generators
- Electromagnetic generators
- Thermoelectric generators
- Power management

© Passeraub - 2021

A few words on the lecturer and on today's lesson

Contact information

Prof. Dr. Philippe Passeraub

Laboratory of Microengineering and Bioinstrumentation,

Campus Biotech B3-04
Chemin des Mines 9
1202 Genève

Tél.: +41 (0)22 558 64 31
philippe.passeraub@hesge.ch

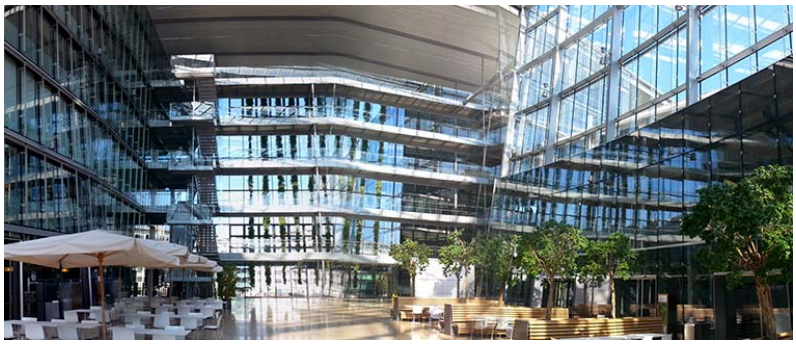

Education and Professional experience: Prof. Dr. Ph. Passeraub

1987-1992	Study at EPFL – Dipl. Ingénieur en microtechnique EPFL, spécialisation en produits intégrés - Silicon (Si) strength sensor
1992-1992	Training at UNINE, Institut de Microtechnique, Neuchâtel, Suisse - Piezoelectric actuated Si microfluidic valve
1992-1994	Projects Manager, Access Sensors SA, Les Charbonnières, Suisse - Products: Si accelero.
1994-1999	PhD at EPFL - An integrated inductive proximity sensor
1999-2000	Senior Research Engineer, Hilti Corp. (FL)
2001-2004	Postdoctoral Fellow at JHU, BME, Maryland (USA) In vitro microfluidics for brain research
2004	Invited Professor, UFSJ, Laboratory for Experimental Neuroscience and Computation, Minas Gerais (Brazil)
01.10.2004	Professor HES in Micro- and biomedical engineering at EIG -> HEPIA, Genève, Suisse
2004-2006	Didactic training
2004-today	Courses in Microengineering - Bachelor
2004-today	Numerous student projects (bachelor and Master level, interships)
2004-today	Head of Laboratory of Microengineering and Bioinstrumentation with a tema of research engineers Development of numerous aR&D projects
2005-2010	Creation and head of the Institute of Bioengineering at EIG - HEPIA
2005-2020	Development of education programs in bioengineering (CAS and UNIGE)
2009-today	MSE Course BioCI
2020	UNIGE Lectures for the MScBioMed
2017-2021	Mandate of MSE HES-SO Head

Objective of today's lecture

- To understand the motivations behind the growing interest in energy harvesting solutions
- To be able to explain potentials, limits and challenges of energy harvesting technologies
- To be able to use theoretical knowledge in sensing technologies to associate known equations of sensors for energy harvesting solutions development

Introduction to energy harvesting and basic considerations

What is energy harvesting?

There are several definitions circulating. One more complete to my point of view is:

Energy harvesting is commonly defined as the conversion of ambient energy into electrical energy. *This definition is too narrow. We define energy harvesting as* ***"the collection and storage of ambient energy for on-demand, off-grid use".***

The first definition considers only the transducer technology for energy conversion, and assumes that the energy must be converted to electricity. Our definition takes a broader, application centric view, where the transducer is one component of a complete system that provides power for those niche applications where other sources of energy are unavailable or unsuitable.

REF: A Sagentia white paper on Energy Harvesting, 2011

What is energy harvesting?

Additional definitions:

Ambient energy

Energy is all around us, in many different forms – thermal, chemical, electrical, mechanical and more. To make use of energy harvesting one or more of these energy fields must be present in the environment of interest, and there must be a suitable transducer to convert the energy.

Off-grid energy

Energy harvesting is used where another supply of energy is not available. Harvesters cost money, so it only makes sense to use them when it is too expensive or physically impossible to use other energy sources such as grid electricity or batteries.

On-demand energy

An energy harvester has to supply power when it is needed, not simply when it is available, and some form of energy storage is generally required to match the demand with the supply.

Context and motivations for this technology

Watch industry

- High precision for time keeping
- No need to wind (=remonter)
- Miniaturization

Atmos (Jaeger Lecoultre)

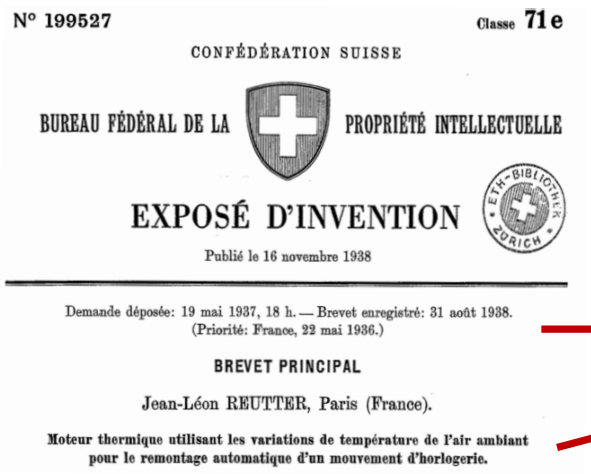

N° 199527 Classe 71 e

CONFÉDÉRATION SUISSE

BUREAU FÉDÉRAL DE LA PROPRIÉTÉ INTELLECTUELLE

EXPOSÉ D'INVENTION

Publié le 16 novembre 1938

Demande déposée: 19 mai 1937, 18 h. — Brevet enregistré: 31 août 1938.
(Priorité: France, 22 mai 1936.)

BREVET PRINCIPAL

Jean-Léon REUTTER, Paris (France).

Moteur thermique utilisant les variations de température de l'air ambiant pour le remontage automatique d'un mouvement d'horlogerie.

Demande déposée: 19 mai 1937, 18 h. — Brevet enregistré: 31 août 1938.
(Priorité: France, 22 mai 1936.)

Moteur thermique utilisant les variations de température de l'air ambiant pour le remontage automatique d'un mouvement d'horlogerie.

Context and motivations for this technology

Watch industry and wearables

Middle to end of 18th :
1st Automatic watches
Pocket watch from BREGUET

1980:
Thermoelectrical watch
THERMATRON from BULOVA

1999:
Solar watch
T-TOUCH from TISSOT

2021:
Solar smartwatch
T-TOUCH CONNECT SOLAR from TISSOT

© Passeraub - 2021

Context and motivations for this technology

Automotive industry

Agriculture

Distributed and embedded microsystems

- Removing connection wires
- No need to recharge or replace batteries
- Miniaturization
- Make the Internet of Things possible

Biomedical

Building automation

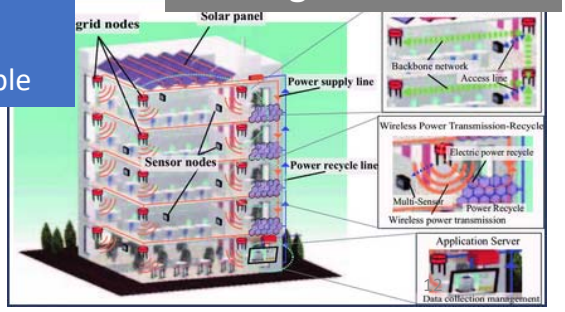

© Passeraub - 2021

Schematic representation of a standard sensing microsystem

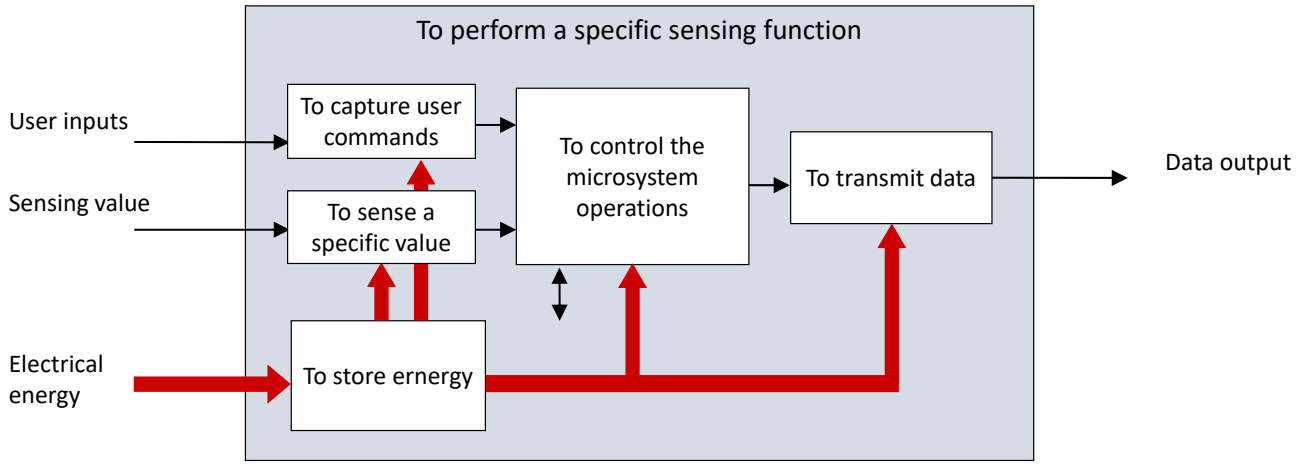

Schematic representation of the envisionned sensing microsystem needing to harvest energy

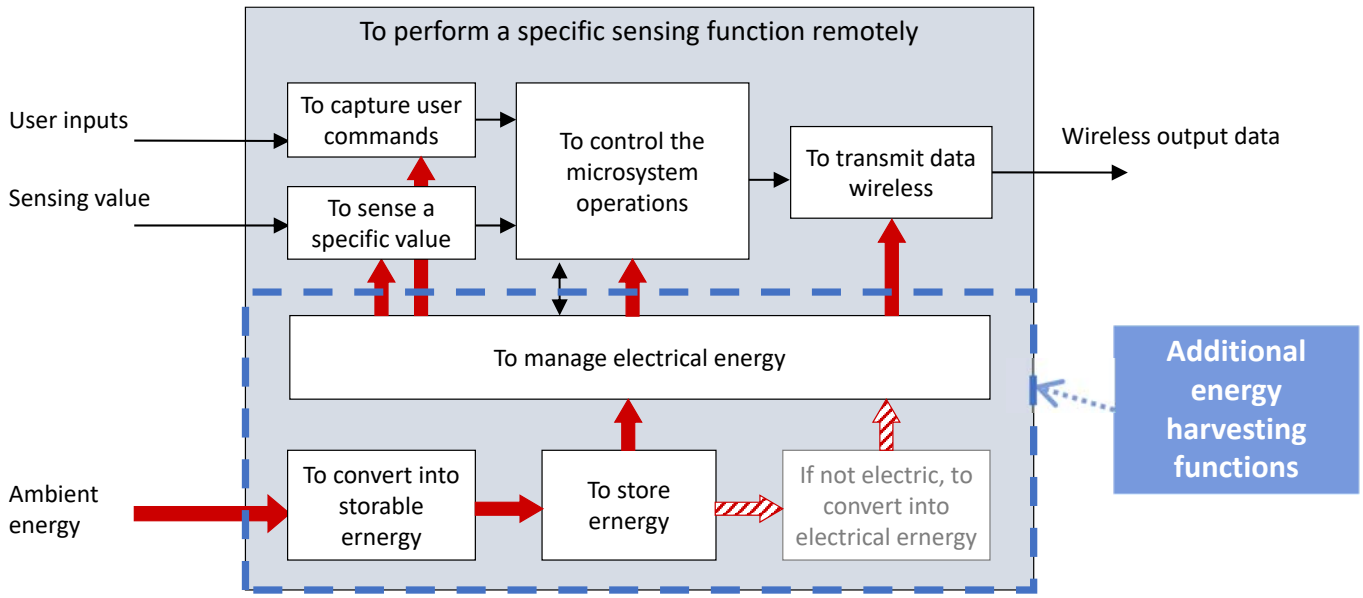

Sources of ambient energy

- Densités d'énergie brutes

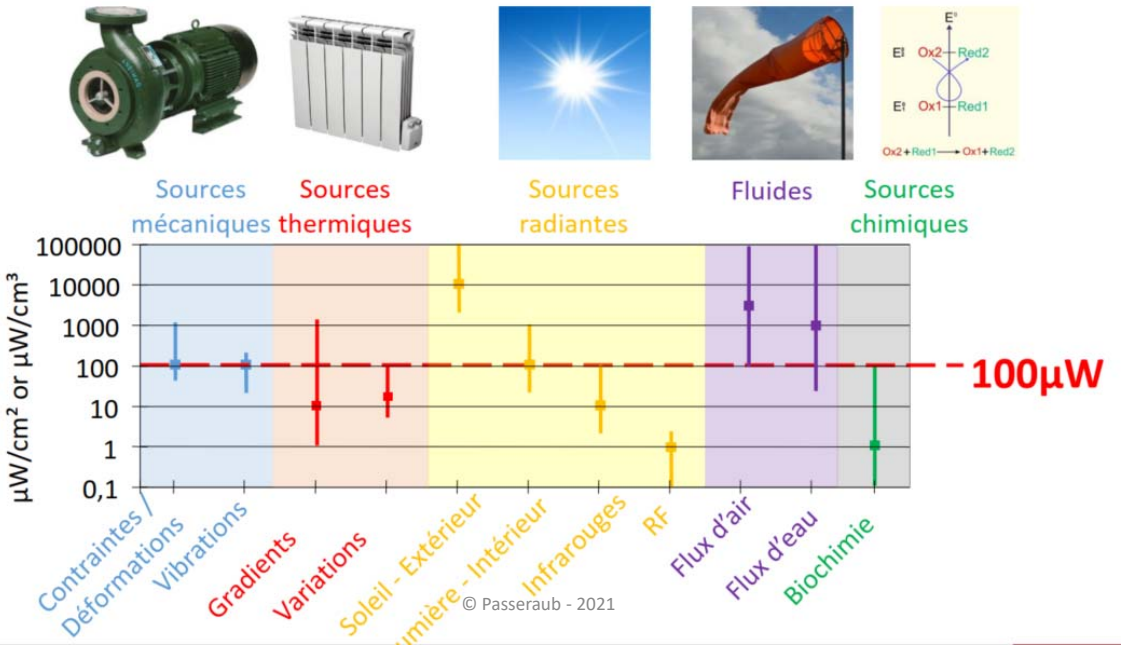

© Passeraub - 2021

[Systèmes mécatroniques pour la récupération d'énergie et la transmission de puissance sans fil, LETI/DSYS, presented at MECAPLASTRONIC CONNECTION 2021]

Energy conversion (not exhaustive)

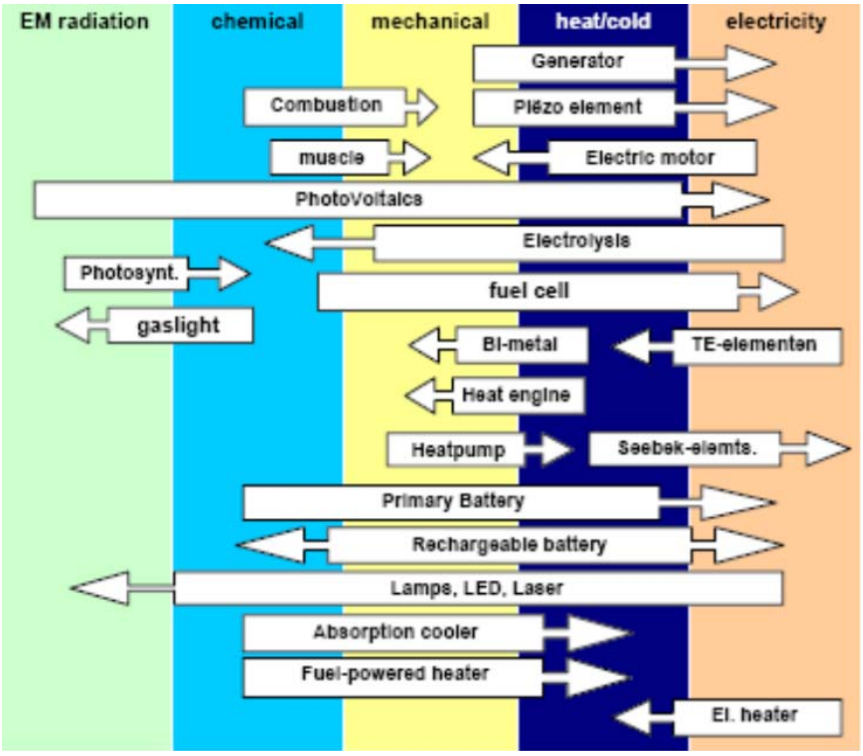

Question:
Where does the triboelectric effect go ?

From https://docplayer.org/47576202-Energy-harvesting-grundlagen-und-praxis-energieautarker-systeme-prof-dr-ing-joerg-wallaschek-essen-20.html as of 2021-12-07

Misconceptions about Micro Energy Harvesting

(some) Journalists: *"Micro Energy Harvesting will stop the climate change."*

Politician: *"Micro Energy harvesting is - on a small scale - the same as we do with regenerative energies - on a large scale."*

Consumer: *"Energy harvesting is nothing else than replacing the battery with a generator."*

System designer: *"I have a sensor that requires 24 V and 50 mA. If you can supply that, we will use energy harvesting."*
"The 100 µW that you deliver with your harvester will not be sufficient for our system. Forget about it."

© Passeraub - 2021

From Peter Woias, FSRM-EMPA Workshop on Energy Harvesting, 2021

General requirements and constraints

We have to operate an embedded system under ...

- highly variable ambient power
  - day-night, summer-winter, indoor-outdoor, on-off times of technical environments, variable temperatures, vibration amplitudes and frequencies, irradiation levels ...
- low-energy and zero-energy phases
  - ,,there is no energy to harvest from"
- variable internal power consumption
  - sensor and data processing: (very) low
  - wireless communication: very high
- undesirable environmental influences
  - temperature, humidity, vibration level, .. .

© Passeraub - 2021

From Peter Woias, FSRM-EMPA Workshop on Energy Harvesting, 2021

What do we REALLY want to accomplish ?

Requirements from the product/application designer:

- a certain system function ,
- with a certain level of reliability,
- under other requirements, e.g. costs, lifetime, material choice, ...
- at a certain application site.

- A complex system design!
- What to do? ...

Requirements from the product/application designer:

- First:
  - retrieve knowledge about the application site
  - available ambient energy
  - allowed space, mass ...
- Then: design of .. .
  - generator
  - energy storage
  - power management
  - electronic system
  - data transmission
  - system concept
  - system integration

From Peter Woias, FSRM-EMPA Workshop on Energy Harvesting, 2021

Global power calculation

1. type of ambient energy ?
2. type of generator ?
3. type of physical interface ?

4. Input power

minimum (usable) input power ?
maximum input power ?
power profile ?
required input power ?

➡ **effective** input power (**EIP**)

$$EIP = S \cdot EPC$$

$$S: \ safety \ \ margin \ \ (>1)$$

1. Required function, reliability ?
2. required application site ?

3. Power consumption

„functional" power consumption
- sensing or actuation
- data processing
- communication

„auxiliary" power consumption
- power management
- system functions (e.g. timers)
- start-up/shut-down
- sleep and wait modus

➡ **effective** power consumption (**EPC**)

From Peter Woias, FSRM-EMPA Workshop on Energy Harvesting, 2021

Power Balance Ratio

$$S = \frac{EIP}{EPC}$$

Power generation (mW)	Power consumption (mW)	Shoe gen (Kymissis) 230	Electromotor used as gen 1.000	Sony hand cranking radio 1.650	Bicycle Axa HR-dynamo 3.000	Stepcharger foot stepping gen 6.000	Cycling bike gen 150.000
Swatch watch	0,001	230.000	1.000.000	1.650.000	3.000.000	6.000.000	150.000.000
Travel Clock	0,002	115.000	500.000	825.000	1.500.000	3.000.000	75.000.000
Hearing aid	0,05	4.600	20.000	33.000	60.000	120.000	3.000.000
Cardiac pacemaker	0,1	2.300	10.000	16.500	30.000	60.000	1.500.000
Tamagotchi	0,36	639	2.778	4.583	8.333	16.667	416.667
Philips pager Fiori (1998)	2	115	500	825	1.500	3.000	75.000
LED pointers	5	46	200	330	600	1.200	30.000
Volvo S80 remote control	12	19	83	138	250	500	12.500
Nokia 6185 cell phone (1999)	18	13	56	92	167	333	8.333
Motorola Startac 130 cell phone (1999)	37	6	27	45	81	162	4.054
Philips Genie cell phone (1997)	48	5	21	34	63	125	3.125
Philips portable radio AE6545	52	4	19	32	58	115	2.885
Sony ICF-B200 Radio	60	4	17	28	50	100	2.500
Philips Fizz cell phone (1996)	66	4	15	25	46	91	2.273
LED flashlight (torch)	80	3	13	21	38	75	1.875
Freeplay FPR1 Radio	90	3	11	18	33	67	1.667
Philips cordless FM headphone	120	2	8	14	25	50	1.250
Philips MP3 player (2000)	220	1	5	8	14	27	682
Philips cassette player ACT6688	276	0,8	4	6	11	22	544
Philips CD player ACT7582	432	0,5	2	4	7	14	347
Philips MP3 player (2000)	440	0,5	2	4	7	14	341
Motorola Iridium satellite phone	570	0,4	1,8	3	5	11	263
Philips Velo 1 PDA	600	0,4	1,7	3	5	10	250
Incandescent flashlight	700	0,3	1,4	2	4	9	214
Motorla 130 (during transmission)	720	0,3	1,4	2	4	8	208
Halogen flash light (torch)	2.000	0,1	0,5	0,8	2	3	75
Philips cordless phone Xalio (1997)	2.703	0,1	0,4	0,6	1	2	56
Philips Windows CE mini-notebook	3.400	0,1	0,3	0,5	0,9	2	44
Video 8 camera	6.000	0,0	0,2	0,3	0,5	1	25
Notebook computer	15.000	0,0	0,1	0,1	0,2	0,4	10
DVD speler	20.000	0,0	0,1	0,1	0,2	0,3	8
Personal computer	35.000	0,0	0,0	0,0	0,1	0,2	4
TV (30cm)	50.000	0,0	0,0	0,0	0,1	0,1	3

(De Pater, TU Delft, 2000)

From https://docplayer.org/47576202-Energy-harvesting-grundlagen-und-praxis-energieautarker-systeme-prof-dr-ing-joerg-wallaschek-essen-20.html as of 2021-12-07

Appropriate system concepts

- adaptive generators
- „stepped activities“

- power-up and power-down strategies
- ultra-low-power sleep modi
- „stepped activities“
- sensor emulation

highly variable ambient power

low-energy and zero-energy phases

variable internal power consumption of the „system electronics“ for sensing and wireless transmission

- low power transmission protocols
- low power transmission hardware
- „How much electronics do we need at all?“

© Passeraub - 2021

From Peter Woias, FSRM-EMPA Workshop on Energy Harvesting, 2021

Mechanical energy harvesting

Effects and topologies

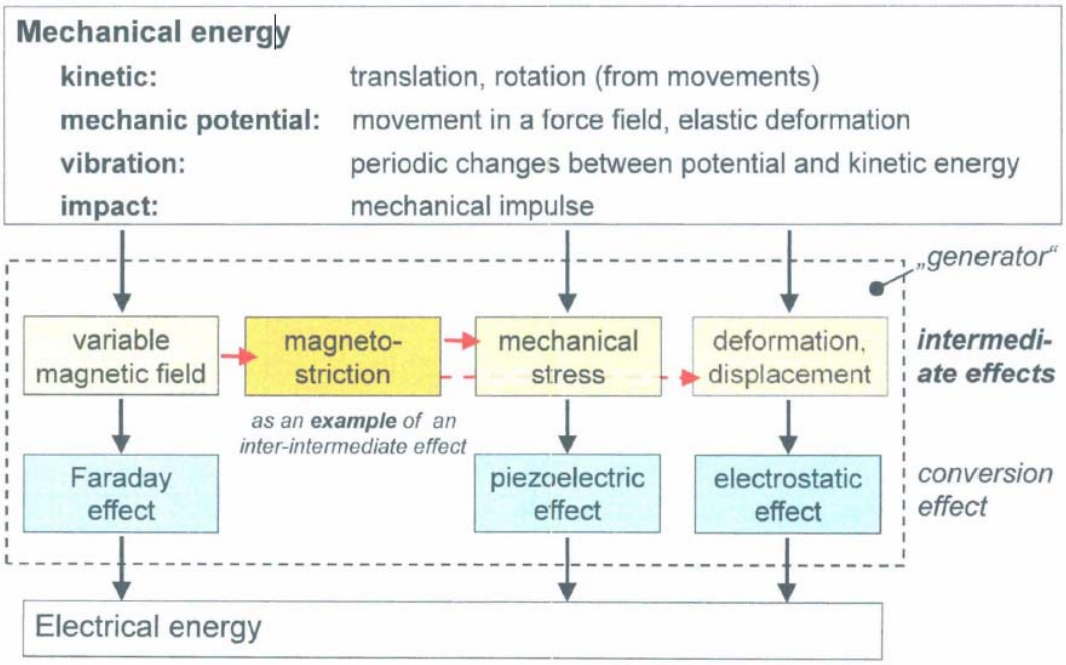

From Peter Woias, FSRM-EMPA Workshop on Energy Harvesting, 2021

Types of mechanical energy and harvesting concepts

based on a mechanical oscillator

1. Sound or vibration

- one stable dominant frequency ➡ mono-resonant generator
- one variable dominant frequency ➡ frequency-tunable generator
- many frequencies („noise") ➡ array of mono-resonant generators

2. Impact or shock

- single events ➡ mono-resonant generator in „plucking mode"
  ➡ non-resonant generator
- repetitive events ➡ mono-resonant generator

3. Force and rotation

- force and deformation ➡ non-resonant, force-triggered generator
- rotation ➡ rotary generator, force-triggered generator, plucking-type generator

© Passeraub - 2021

From Peter Woias, FSRM-EMPA Workshop on Energy Harvesting, 2021

(Mono)-Resonant mechanical energy harvesters

Topology and energy flow

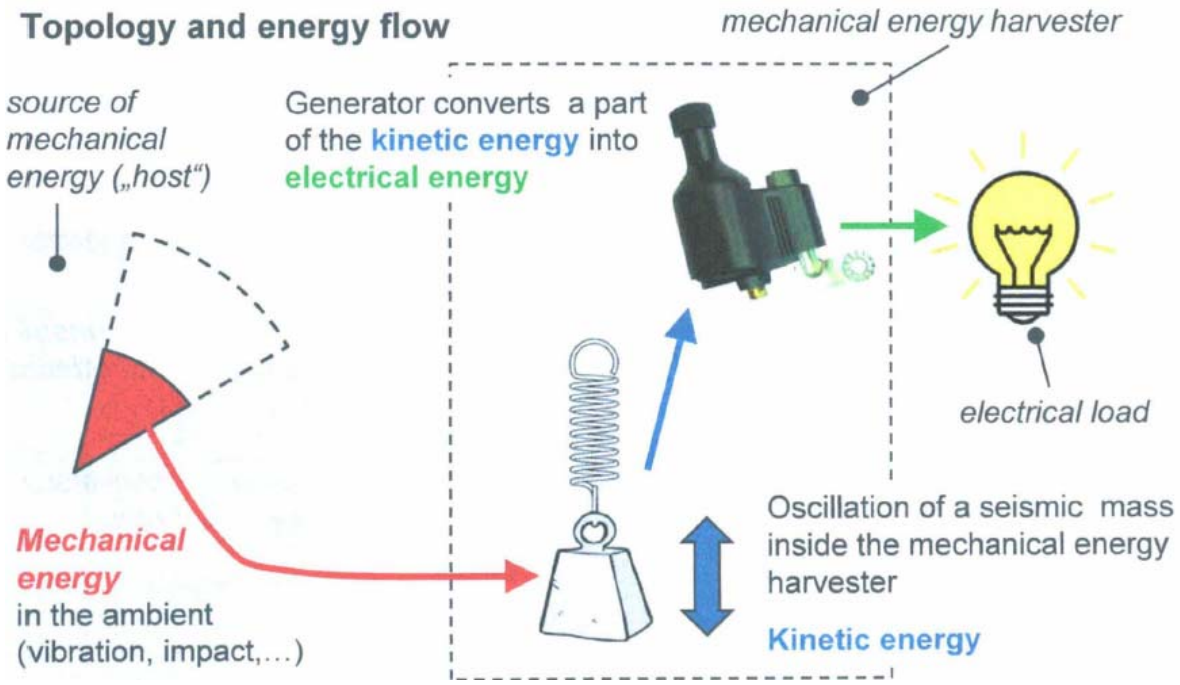

© Passeraub - 2021

From Peter Woias, FSRM-EMPA Workshop on Energy Harvesting, 2021

The harmonic mechanical oscillator

… is the core of mechanical vibration harvesting.
Its function principle is as follows:

movement y(t) of a „frame“ (e.g. generator housing) excites the seismic mass

movement z(t) of the seismic mass z(t) is damped by …

mechanical effects (friction, air damping…)

electrical effects (energy conversion)

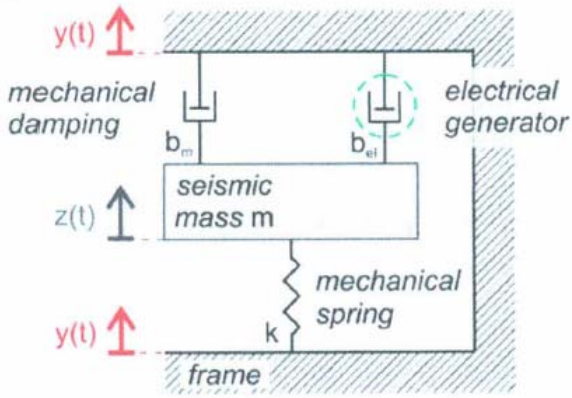

Remember:
Electrical energy conversion will take mechanical energy from the seismic mass, do not take „too much“ !

From Peter Woias, FSRM-EMPA Workshop on Energy Harvesting, 2021

The harmonic mechanical oscillator

Topology and energy flow

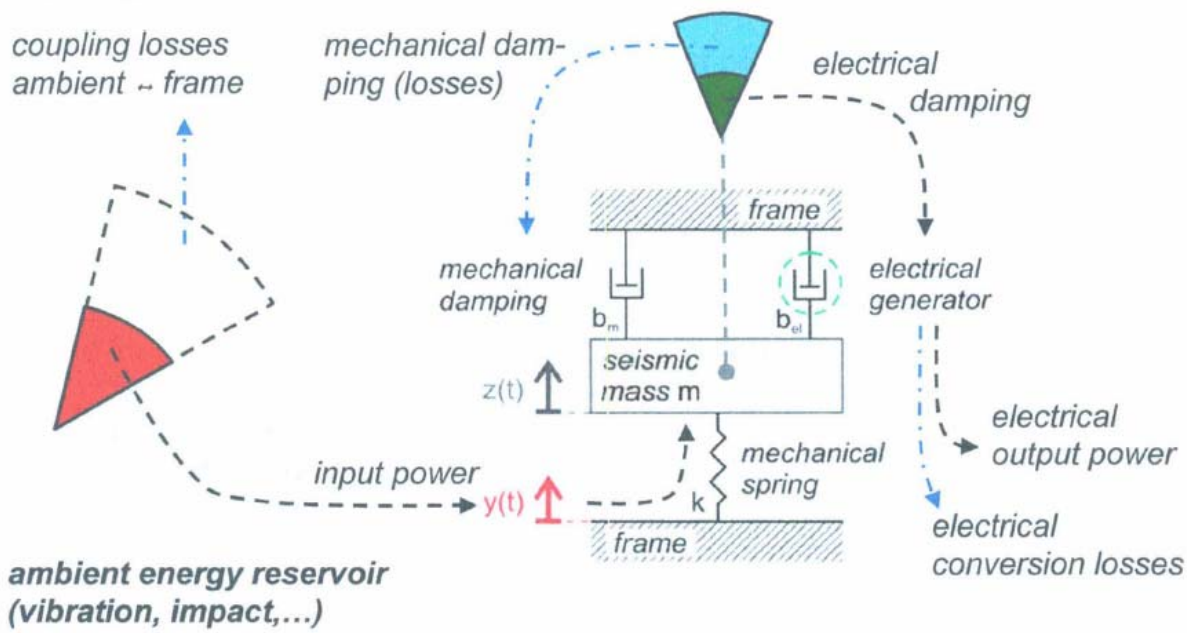

From Peter Woias, FSRM-EMPA Workshop on Energy Harvesting, 2021

The harmonic mechanical oscillator

Energy transfer and design issues

1. Ambient + seismic mass

- physical effects and parameters
- optimal energy transfer

2. Seismic mass + mechanoelectric transducer

- limit of extractable electrical power ?
- optimal operation setpoint ?

3. Mechanoelectric conversion (piezoelectric, electromagnetic, electrostatic, ...)

- conversion efficiency
- feedback into the mechanical system

The seismic mass is the power shuttle

Central issue: motion of the seismic mass (equations similar to the accelerometer application)

© Passeraub - 2021

From Peter Woias, FSRM-EMPA Workshop on Energy Harvesting, 2021

The harmonic mechanical oscillator

Design trade-offs for resonant energy harvesting

1. Movement of the seismic mass vs. harvested energy

$$\text{kinetic energy of seismic mass} \sim \frac{1}{\text{harvested energy}}$$

*The more we harvest from a moving seismic mass, the more we extract kinetic energy from this moving mass, we **„dampen“** the movement. In the extremal case, the mass is not moving any more, and there is nothing to harvest from.*

2. Resonance vs. bandwidth

$$\text{resonance amplification} \sim \frac{1}{\text{bandwidth}} \sim \frac{1}{\text{harvested energy}}$$

*We use a mechanical oscillator to amplify the movement of the seismic mass „in resonance“. The better we do this by design of a generator the lower the frequency window of resonance, i.e. the usable bandwidth, will be. Also extraction of electrical energy, i.e. **„damping“**, will reduce the resonance effect and increase the usable bandwidth, at the sake of lower energy.*

© Passeraub - 2021

From Peter Woias, FSRM-EMPA Workshop on Energy Harvesting, 2021

Operation modes

Resonant operation versus non-resonant operation

Resonant

- high energy transfer (at high Q) ☺
- full use of internal mass movement ☺
- small power bandwidth (at high Q) ☹

➡ suitable for applications with …

- stable excitation frequencies
- high frequencies (allows to use small generators)

Non-resonant

- no „resonant amplification" ☹
- no seismic mass required ☺
- wide power bandwidth ☺

➡ suitable for applications with …

- variable excitation frequencies
- low frequencies (would require large resonant generators)

What generator principle ?

Piezoelectric ? Electromagnetic ? Electrostatic ? Electret ? Triboelectric ?

© Passeraub - 2021

From Peter Woias, FSRM-EMPA Workshop on Energy Harvesting, 2021

Summary and conclusions

Mechanoelectric generators prove to be complex in their physical nature and in their scientific and technical understanding.

The turn-key for understanding the resonant principle is knowledge about ...

- the movement of the seismic mass
- the influence of damping
- the individual properties of the generator principles

The majority of principles used today are - still - resonant generators.

Non-resonant generators are upcoming recently in specific applications.

A ,,modular" approach is conceivable, as the physical design of different generators is somewhat similar.

Energy-autonomous frequency tuning is feasible and under investigation.

© Passeraub - 2021

From Peter Woias, FSRM-EMPA Workshop on Energy Harvesting, 2021

Piezoelectric generator

Piezoelectric generator

Principle: Direct piezoelectric effect

charge displacement in a nonsymmetric crystal lattice, obtained via a mechanical deformation of the piezoelectric material

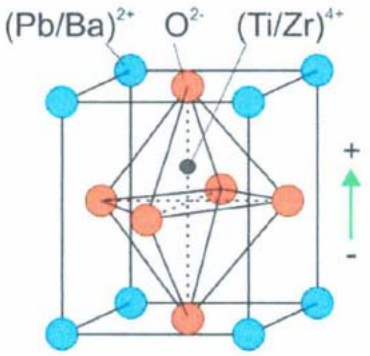

Perovskite crystal structure of standard piezoceramic material (here PbZrTi or PZT and BaZrTi)

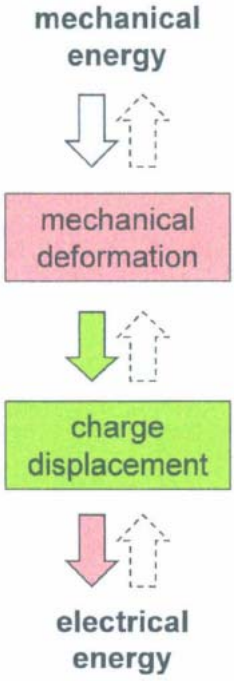

From Peter Woias, FSRM-EMPA Workshop on Energy Harvesting, 2021

Piezoelectric generator: coupling modes

„d_{33}-Mode“ (see graph)

- vertical force („3“)
- vertical displacement
- vertical charge dislocation

„d_{31}-Mode“

- **horizontal** force („1“ or „2“)
- horizontal and vertical displacement
- vertical charge dislocation

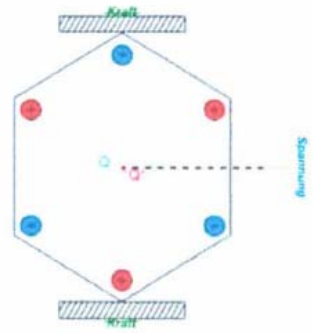

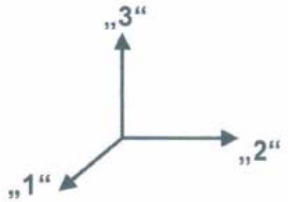

From Peter Woias, FSRM-EMPA Workshop on Energy Harvesting, 2021

Piezoelectric generators: constitutive equations

Material parameters

d : *piezoelectric strain coeffizient* $\left[\frac{m}{V}\right]$

e : *dielectric constant* $\left[\frac{As}{Vm}\right]$

Y : *Young's modulus* $\left[\frac{N}{m^2}\right]$

Variables

σ : *mechanical stress* $\left[\frac{N}{m^2}\right]$

ε : *mechanical strain*

E : *electrical field strength* $\left[\frac{V}{m}\right]$

D : *electrical displacement* $\left[\frac{As}{m^2}\right]$

$$\varepsilon = \overbrace{\frac{\sigma}{Y}}^{\text{Hooke's Law}} + \overbrace{d \cdot E}^{\text{piezoelectric coupling}}$$

$$D = \underbrace{e \cdot E}_{\text{dielectric equation}} + \underbrace{d \cdot \sigma}_{\text{piezoelectric coupling}}$$

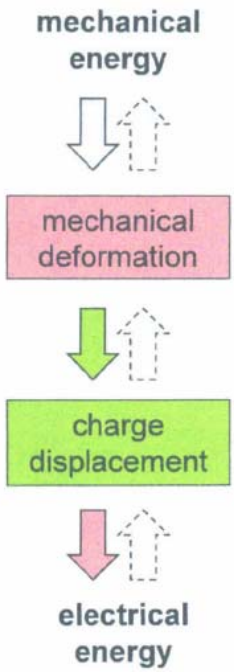

From Peter Woias, FSRM-EMPA Workshop on Energy Harvesting, 2021

Piezoelectric material parameters

	units	PZT	PVDF	PZN-PT
strain coefficient d_{31}	10^{-12} m/V	320	20	950
strain coefficient d_{33}	10^{-12} m/V	650	30	2000
coupling coefficient k_{31}	------	0.44	0.11	0.5
coupling coefficient k_{33}	------	0.75	0.16	0.91
rel. dielectric constant	e_r / e_0	3800	12	4500
Young's modulus Y	10^{10} N/m²	5	0.3	0.83
tensile strength σ_t	10^7 N/m²	2	5.2	8.3

S. Roundy et al., „Energy Scavengers for Wireless Sensor Networks", Kluwer, 2004

Piezoelectric coupling coefficient

defines the ability to convert mechanical into electrical energy or vice versa, here:

$$k = \sqrt{\frac{\textit{electrical energy stored}}{\textit{mechanical energy applied}}}$$

$$k = d \cdot \sqrt{\frac{Y}{e}}$$

From Peter Woias, FSRM-EMPA Workshop on Energy Harvesting, 2021

Piezoelectric bending generators: Principle

Layer composition and thickness

generator as double layer or triple layer beam (1..2 piezo + 1 stiffening layer)

„double nature": generator is also the spring of the seismic mass

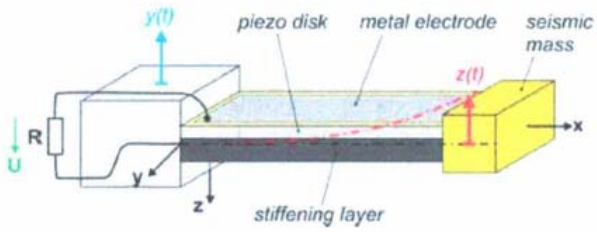

Design challenges

- optimization of stress distribution ➡ higher output power
- tunable resonance frequency ➡ broader application range, more power
- smart system integration ➡ cheaper, easier fabrication

From Peter Woias, FSRM-EMPA Workshop on Energy Harvesting, 2021

Mechanical design

Optimization of the beam shape

stiffening layer required to generate unidirectional stress in the piezo layer (otherwise compressive and tensile stress would compensate to zero

optimal **height** of both layers for a maximal stress load in the piezo layer

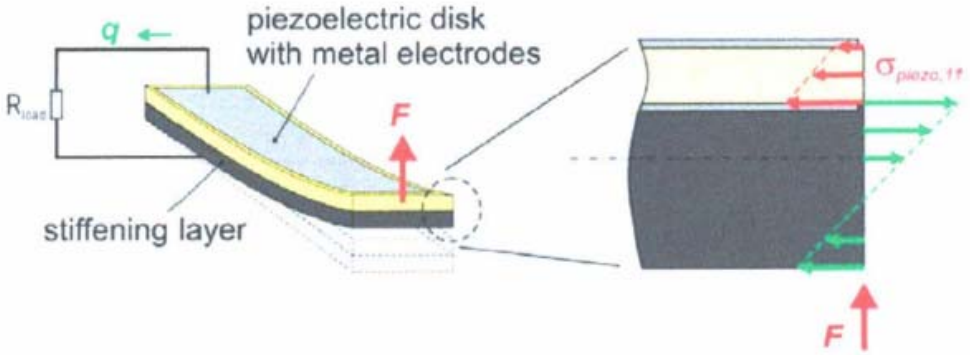

From Peter Woias, FSRM-EMPA Workshop on Energy Harvesting, 2021

Piezo-Polymer-Composite (PPC) technology

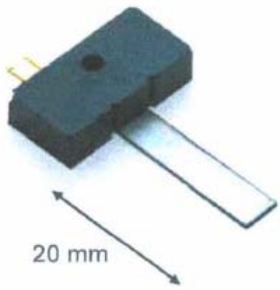

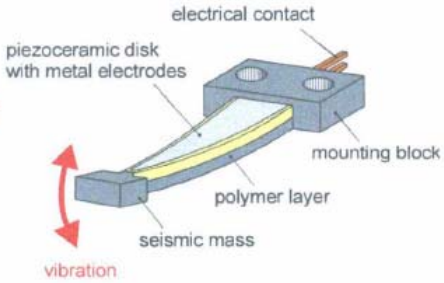

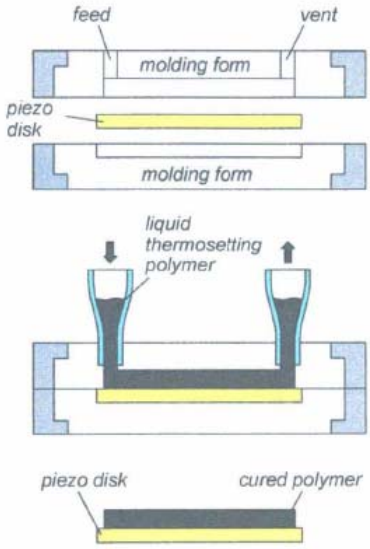

Advantages

fabrication and microintegration on one step

low-cost-perspective via insert inject molding

extremely high design flexibility

generators and actuators from one fabrication technology

From Peter Woias, FSRM-EMPA Workshop on Energy Harvesting, 2021

Power: Example of a triangular beam

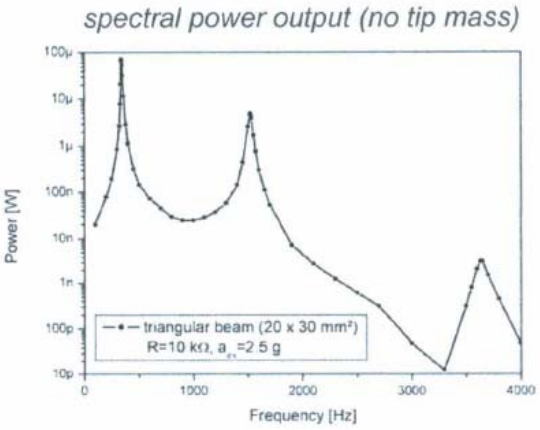

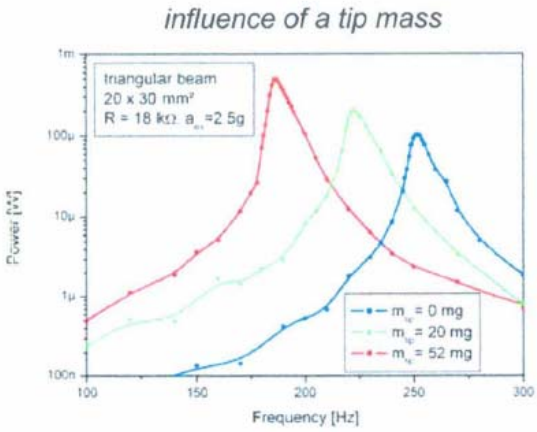

Measurement conditions

acceleration amplitude: 2.5 G

acceleration signal: sinusoidal

load resistor: optimum load

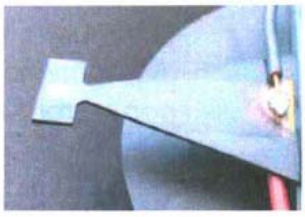

From Peter Woias, FSRM-EMPA Workshop on Energy Harvesting, 2021

Non-resonant impact-type piezo generator

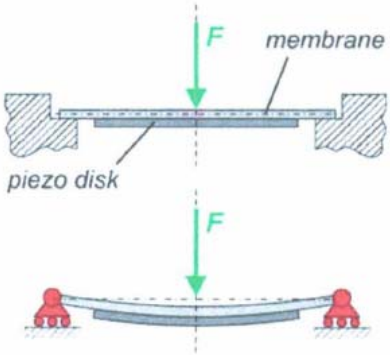

M. Wischke et al., *Dig. Techn. Papers, Transducers*, 875-878, 2007

6 mW_p @ 36N pulse (100 ms)

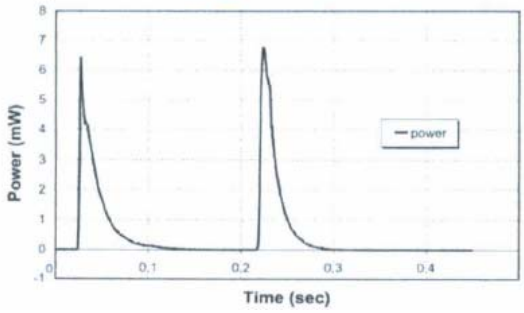

Advantages

stress-homogenized hinge design for a maximal output power

high output power

high output voltage

stacked devices for power multiplication

From Peter Woias, FSRM-EMPA Workshop on Energy Harvesting, 2021

Commercial products ... as available today ?

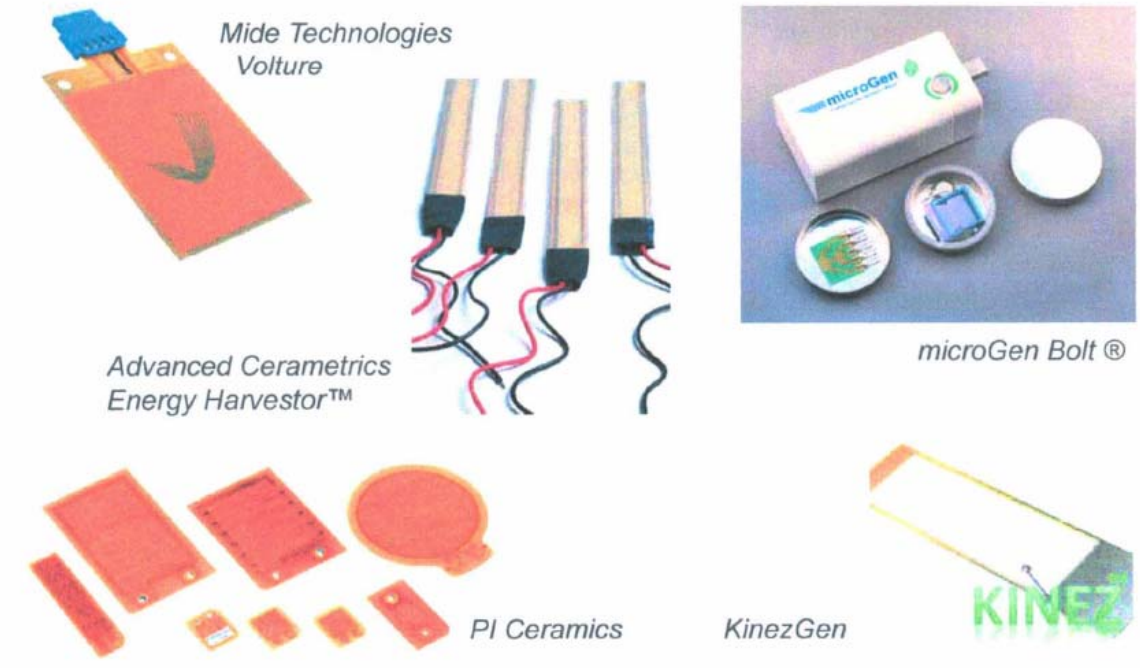

From Peter Woias, FSRM-EMPA Workshop on Energy Harvesting, 2021

Summary and conclusions

Piezoelectric generators make the majority of mechanoelectric generators today, due to their ...

- relatively simple fabrication (,,simple beam")
- high energy density and high output voltage
- widespread applicability

Piezo harvesters have been combined with all traditional and all modern generator concepts studied today, i.e.

- resonant generators
- non-resonant generators
- frequency-tunable generators
- plucking-type generators.

First products are available.

From Peter Woias, FSRM-EMPA Workshop on Energy Harvesting, 2021

Electromagnetic Generators

Electromagnetic generators

Principle: Electromagnetic induction

The movement of an electric conductor in a magnetic field with variable flux $d\phi/dt$ generates an induced voltage at the ends of the conductor.

Faraday's law of induction

$$U = -N \cdot \frac{d\Phi}{dt}$$

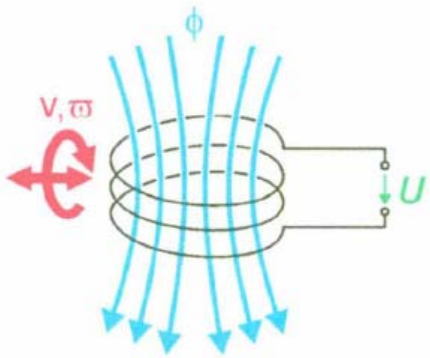

Properties

AC currents from motion or induced AC fields

bad to fair voltage range (mV…V)

moderate source impedance (<10 kΩ)

From Peter Woias, FSRM-EMPA Workshop on Energy Harvesting, 2021

Design principles of vibrating generators

Moving coil

- seismic mass tailored individually ☺
- moving electrical connections ☹
- possibly a higher total mass ☹

Moving magnet

- Seismic mass = magnet + … ☺ ☹
- fixed electrical connections ☺
- possibly a smaller total mass ☺

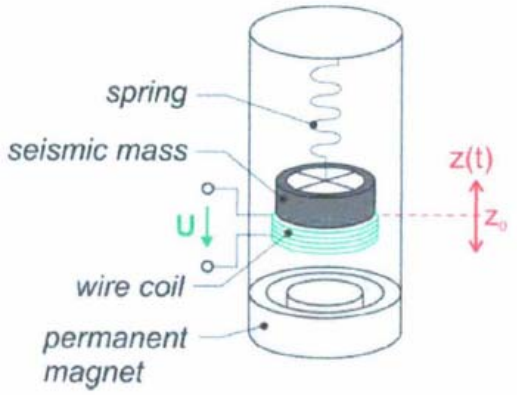

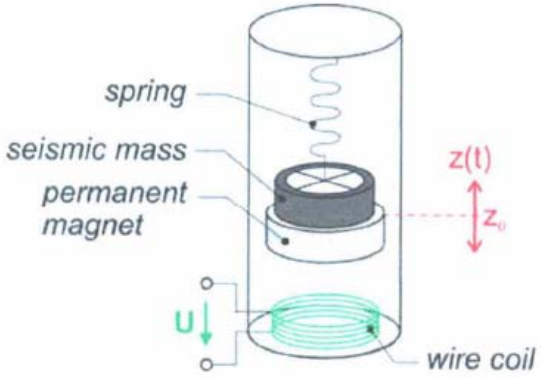

From Peter Woias, FSRM-EMPA Workshop on Energy Harvesting, 2021

Some basics of magnetism

State variables and material parameters

$\vec{H}$: *magnetic field strength* $\left[\frac{A}{m}\right]$

$\vec{B}$: *magnetic flux density* $\left[\frac{Vs}{m^2}\right]$

μ : *magnetic permeability* $\left[\frac{Vs}{Am}\right]$

Φ : *magnetic flux* $[Vs]$

$$B = \mu \cdot H$$

$$\Phi = \int_A \vec{B} \cdot d\vec{A}$$

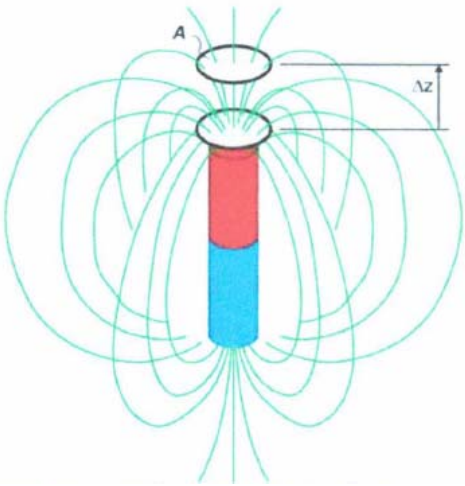

From Peter Woias, FSRM-EMPA Workshop on Energy Harvesting, 2021

Electromagnetic coupling coefficient k

What is the electromagnetic coupling coefficient k?

k is here the relationship between the voltage induced in the coil and the velocity of the seismic mass (or coil):

$$k = \frac{U_{induced}}{z'}$$

Faraday's law: $U_{induced} = -N \cdot \frac{d\Phi}{dt} = -N \cdot \frac{d\Phi}{dz} \cdot \frac{dz}{dt} = -k(z) \cdot z'(t)$

Assumption 1: B ~ constant over A

$$\Phi = \int_A \vec{B} \cdot d\vec{A} \approx B(z) \cdot A \Rightarrow U = \underbrace{-N \cdot \frac{dB}{dz} \cdot A}_{k(z)} \cdot z'(t)$$

Assumption 2: small movements Δz around z_0 :

$$k = N \cdot A \cdot \left.\frac{dB}{dz}\right|_{z_0} \approx const.$$

From Peter Woias, FSRM-EMPA Workshop on Energy Harvesting, 2021

Electromagnetic generator in PCB technology

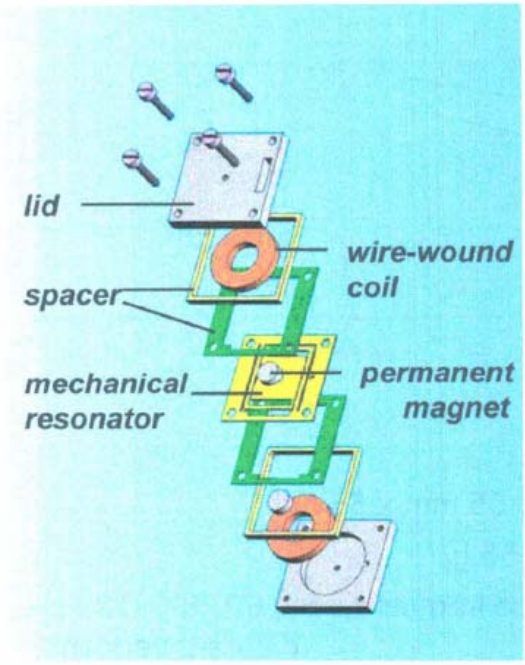

IMTEK – Laboratory for Simulation

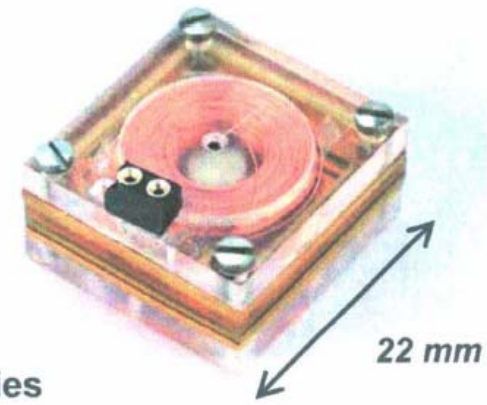

Properties

output power:

330 µW @ 102 Hz and 1G

no-load voltage: 210 mV

(to be improved via modified coil design)

From Peter Woias, FSRM-EMPA Workshop on Energy Harvesting, 2021

Commercial products ... as available today ?

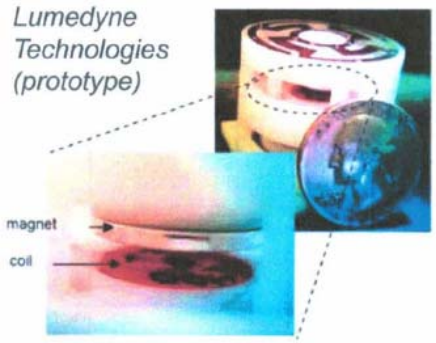

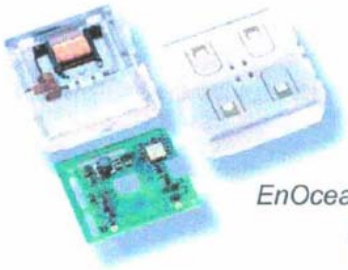

EnOcean ECO 100
(part of their
battery-less
switches)

Ferro solutions VEH-460
(presented 2010,
discontinued ?)

Perpetuum PMG-17
(available)

From Peter Woias, FSRM-EMPA Workshop on Energy Harvesting, 2021

Perpetuum PMG 17

© Perpetuum, UK

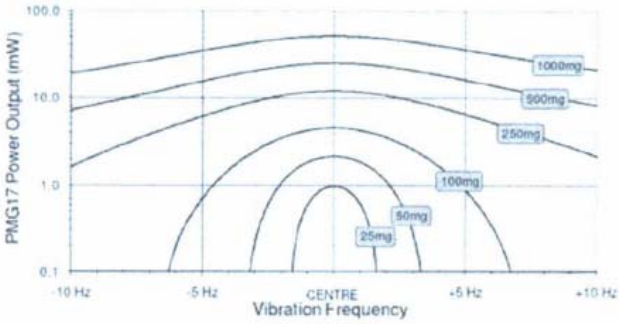

Properties

size: ø 55 mm x 55 mm

weight: 655 g

resonance frequency: 50, 60, 100, 120 Hz
(different versions)

From Peter Woias, FSRM-EMPA Workshop on Energy Harvesting, 2021

Comparison of size and power density

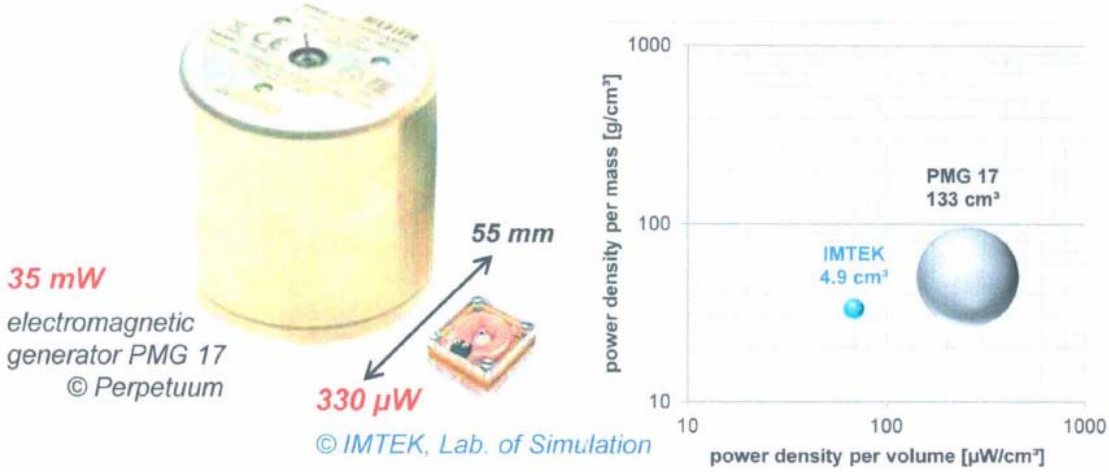

Requirements for the design of embedded systems

- small system size ➡ increase volumetric power density
- side application spectrum ➡ tunable or adjustable, module concepts,…
- system integration ➡ fabrication technologies and system design

From Peter Woias, FSRM-EMPA Workshop on Energy Harvesting, 2021

Summary and conclusions

Electromagnetic generators can be called “mature” today.

Most design issues are solved, several products are on the market.

Most concepts use mono-resonant vibration harvesting.

From Peter Woias, FSRM-EMPA Workshop on Energy Harvesting, 2021

Thermoelectric generator

Thermoelectric Generator (TEG)

Principle of operation

- generator attached to heat source and heat sink
- TEG converts thermal into electrical energy, for that ….
- a heat flow q is (and must be) created by the temperature difference ΔT across the device
- As result of thermoelectric material effects a voltage ΔU and a current I is created at the load

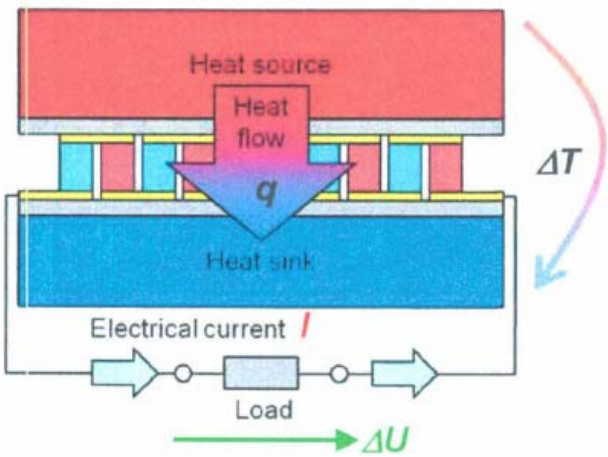

From Peter Woias, FSRM-EMPA Workshop on Energy Harvesting, 2021

Thermoelectric Generator (TEG)

Components of a "standard" TEG

n- and p-type semiconductors – thermoelectrically active components ("thermo-legs")

interconnects – electrical connection between thermo-legs

contact pads – electrical connection to user application

ceramics insulation – electrical insulation, mechanical strength

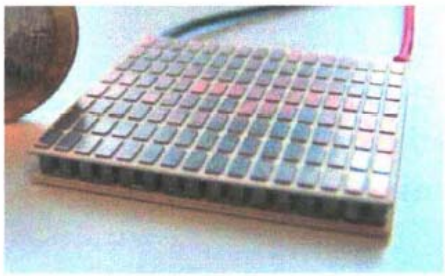

© Peltron

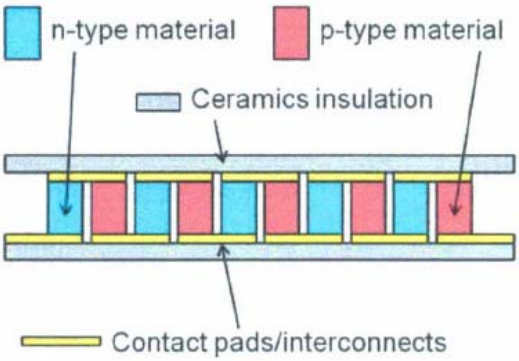

From Peter Woias, FSRM-EMPA Workshop on Energy Harvesting, 2021

The Seebeck Effect

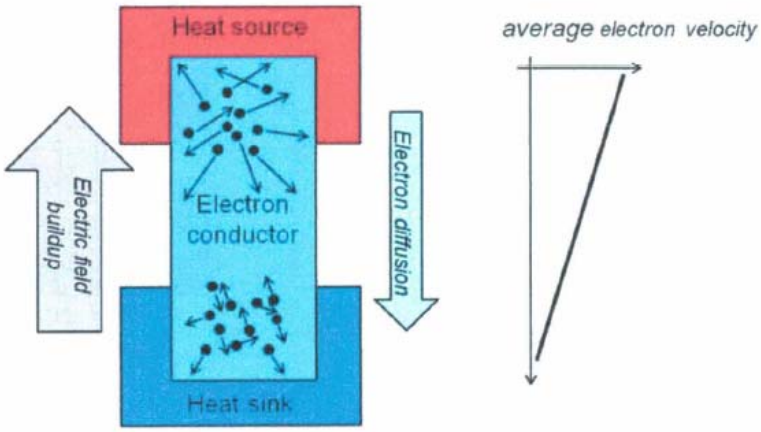

Basic physical effect: Thermodiffusion

higher average electron velocity at higher temperature ("heat source")

electrons diffuse towards cold side ("heat sink")

equilibrium is reached through build-up of a counteracting electric field

From Peter Woias, FSRM-EMPA Workshop on Energy Harvesting, 2021

The Seebeck Effect

Thermopower

resulting electric field has different direction for p- and n-type materials

magnitude depends on temperature difference and material parameters

$$\Delta U = \Delta U_p + \Delta U_n = (S_p - S_n)\cdot \Delta T = S \cdot \Delta T$$

S: *Seebeck coefficient*

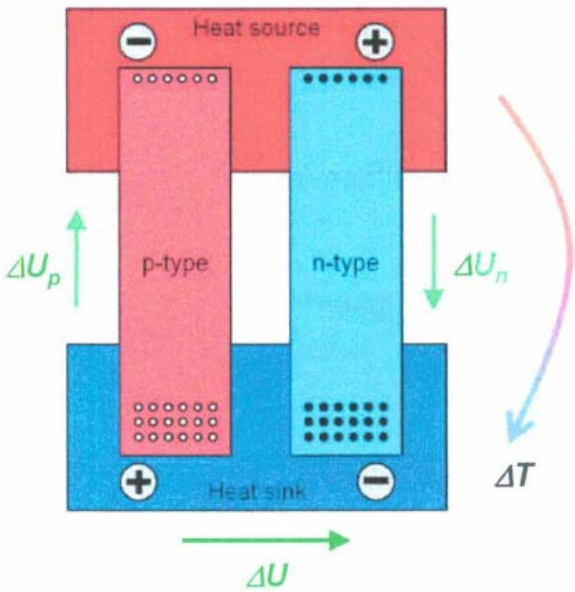

S_i (or α_i) is the Seebeck coefficient (or thermopower) of a material i

S (or α) is the Seebeck coefficient (or thermopower) of a material pair or "unicouple"

From Peter Woias, FSRM-EMPA Workshop on Energy Harvesting, 2021

The Seebeck Effect

Thermoelectric unicouple

unit cell of every TEG

n- and p-type materials in parallel to allow a simple unidirectional heat flow

typical voltage generated:

ΔU_{uni} = **200-500 µV/K**

thermovoltages added by connecting thermolegs electrically in series

$\Delta U = n \cdot \Delta U_{uni}$

large number *n* of thermolegs required for a useful output voltage **ΔU**

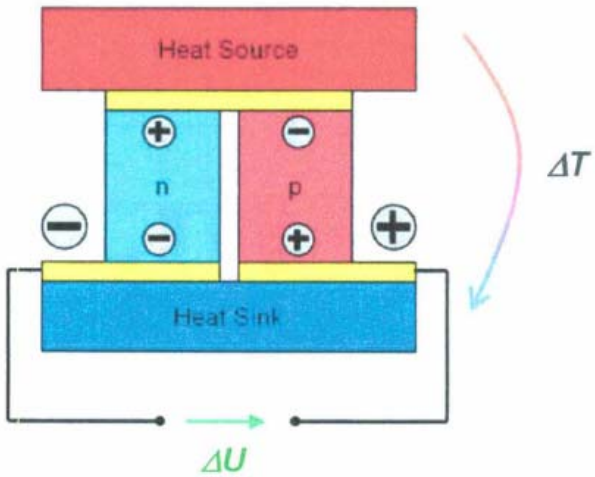

$$\Delta U = n \cdot S \cdot \Delta T$$

From Peter Woias, FSRM-EMPA Workshop on Energy Harvesting, 2021

Thermoelectric Generator

Typical macroscopic design

number n of thermolegs:	typically around 20 to 150 pairs
dimensions:	1x1 cm² … 6x6 cm²
height:	0.3 …1.5 cm
output voltage (no load):	10 …100 mV/K

$$\Delta U = n \cdot S \cdot \Delta T$$

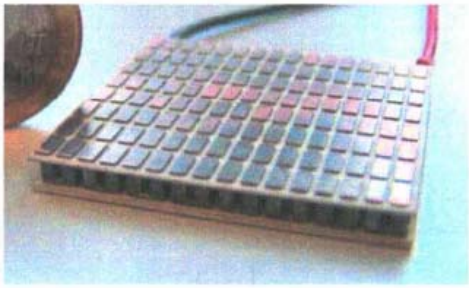

© Peltron

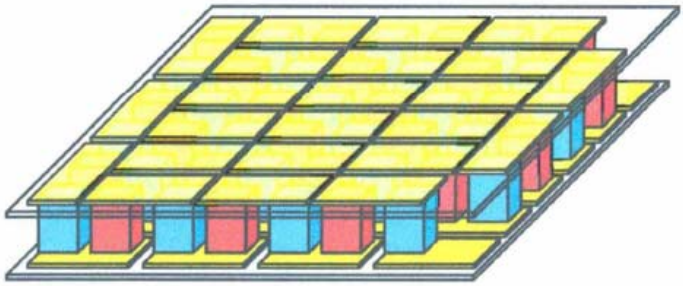

From Peter Woias, FSRM-EMPA Workshop on Energy Harvesting, 2021

Thermoelectric Materials

Material properties for high-performance TEGs

$$\Delta U = S \cdot \Delta T$$

large Seebeck coefficient
(depends on material choice, temperatures,…)

$$\Delta U = S \cdot \Delta T$$

high ***thermal*** resistivity
= low ***thermal*** conductivity

high ***electrical*** conductivity
= low ***electrical*** resistivity

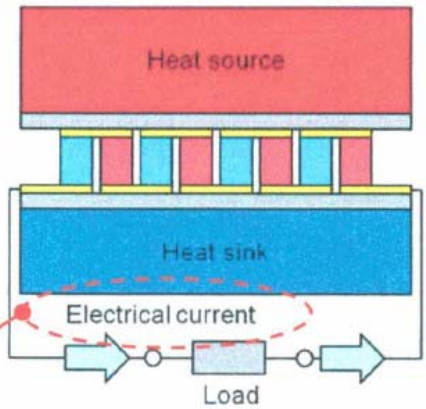

From Peter Woias, FSRM-EMPA Workshop on Energy Harvesting, 2021

Thermoelectric Figure of Merit ZT

acts as „performance indicator“ for a thermoelectric **material**

dimensionless value

higher values of ZT indicate better material performance

strong dependence on absolute temperature T

only few high-ZT materials available

$$Z \cdot T = \frac{S^2 \cdot \sigma}{\kappa} \cdot T$$

S: *Seebeck coefficient* $\left[\frac{V}{K}\right]$

κ: *thermal conductivity* $\left[\frac{W}{m \cdot K}\right]$

σ: *electrical conductivity* $\left[\frac{1}{\Omega \cdot m}\right]$

What does ZT say in detail?

high Seebeck coefficient S ➡ high output power

high electric conductivity σ ➡ low internal resistance ➡ high output power

low thermal conductivity κ ➡ no thermal short circuit of ΔT ➡ high output power

From Peter Woias, FSRM-EMPA Workshop on Energy Harvesting, 2021

Established Thermoelectric Materials

Material choice based on temperature range and application

today: max. ZT values around 1 for all materials

only Bi_2Te_3 commercially available

research for new materials:

- Skutterudites
- Half-Heusler composites
- Clathrates

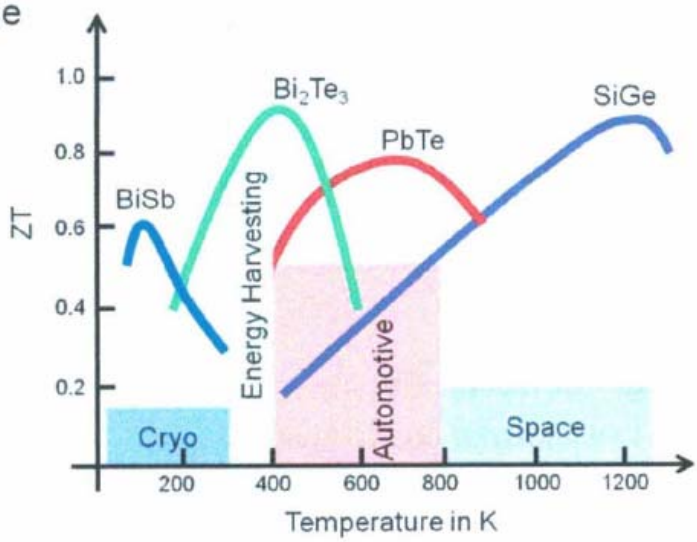

From Peter Woias, FSRM-EMPA Workshop on Energy Harvesting, 2021

Limits of the thermoelectric efficiency η

Carnot limit

maximum efficiency **of a thermoelectric process** is limited by Carnot

result: small efficiency for small temperature differences

$$\eta_C = \frac{(T_h - T_c)}{T_h}$$

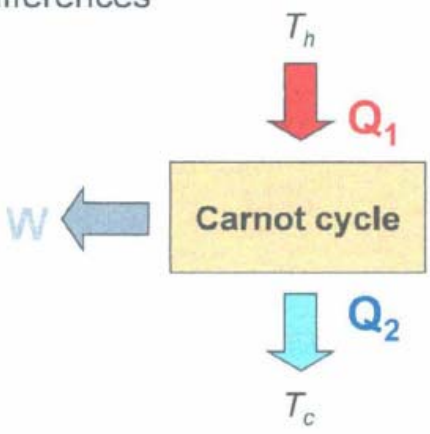

Device efficiency

The maximum efficiency **of a TEG** is - in addition - limited by the ZT of the material

Best efficiency of ~10 % achieved in space applications with high ΔT

From Peter Woias, FSRM-EMPA Workshop on Energy Harvesting, 2021

Commercial products ... as available today ?

Custom Thermoelectrics
Everrredtronics
Peltron
Tegpower
Thermalforce,...
(mini-TEGs, standard products)

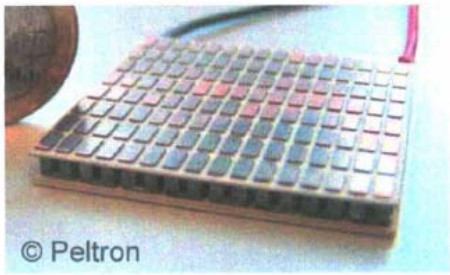

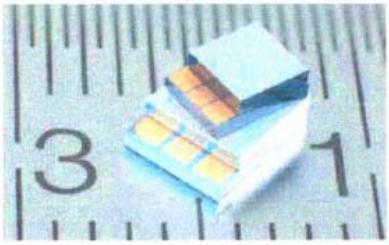

MicroPelt
(chip type µTEGs, system design)

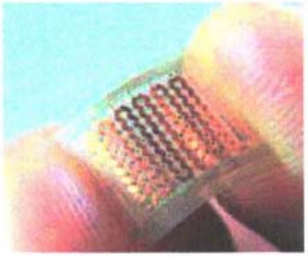

greenTEG
(foil type µTEGs, system design)

From Peter Woias, FSRM-EMPA Workshop on Energy Harvesting, 2021

Summary and conclusions

Miniaturized thermoelectric generators are available as standard products today from a large group of suppliers.

Bismuth-telluride is mostly used in these commercial devices.

A huge effort is visible in research to improve the efficiency of TEGs via novel thermoelectric materials.

Micro-TEGs as “standard products” are comparatively rare today. Cost issues do prevent their more widespread use, however, this might change.

True “low-cost” micro-TEGs are missing today, but would be worth the effort.

For all TEG applications a full system design has to be performed, with ...

- thermal resistances
- thermal capacitances
- all electrical interfaces

taken into account. This is, however, straightforward.

© Passeraub - 2021

From Peter Woias, FSRM-EMPA Workshop on Energy Harvesting, 2021

Power management

© Passeraub - 2021

Electronic power management

Global overview on (potentially) required building blocks

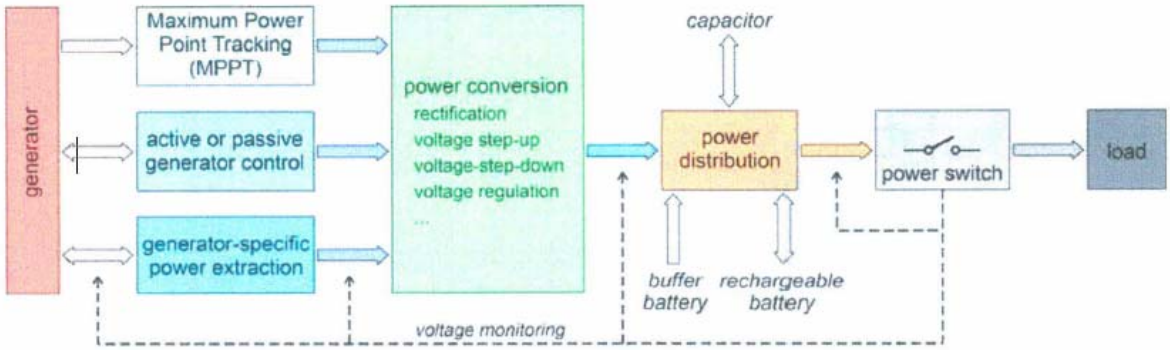

not all building blocks are required for every generator/load/use case

modifications/simplifications are possible or mandatory (e.g. from cost reasons)

part of these functions is – meanwhile – available as monolithic ICs

From Peter Woias, FSRM-EMPA Workshop on Energy Harvesting, 2021

Maximum-Power-Point tracking (MPPT)

Purpose and concept

extract the maximum of available power from a generator

done via …

1. „static load matching“: *a fixed adapation of the load resistance to the generator's (constant) internal resistance*
2. „dynamic load matching“: *a continuous adapation of the load resistance to the generators optimal load point*
3. „indirect load matching“: *use of additional information (e.g. from dedicated sensors) to find the optimal dynamic loading of the generator*

From Peter Woias, FSRM-EMPA Workshop on Energy Harvesting, 2021

Low-voltage step-up conversion: What for, how?

Requirements

- upward conversion of low input voltages
- low start-up voltage
- sufficient conversion efficiency
- minimal power losses

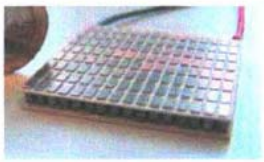

thermoelectric generator © Peltron

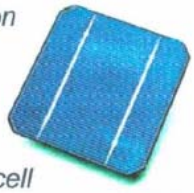

solar cell

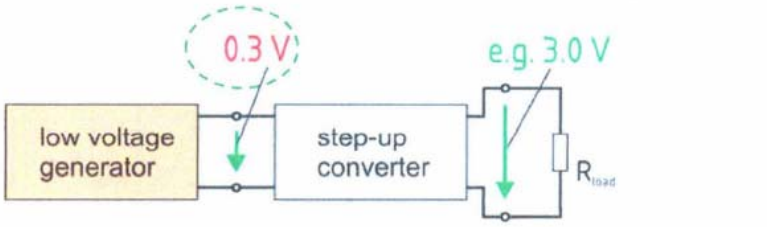

From Peter Woias, FSRM-EMPA Workshop on Energy Harvesting, 2021

Commercial low voltage (LV) step-up converter ICs

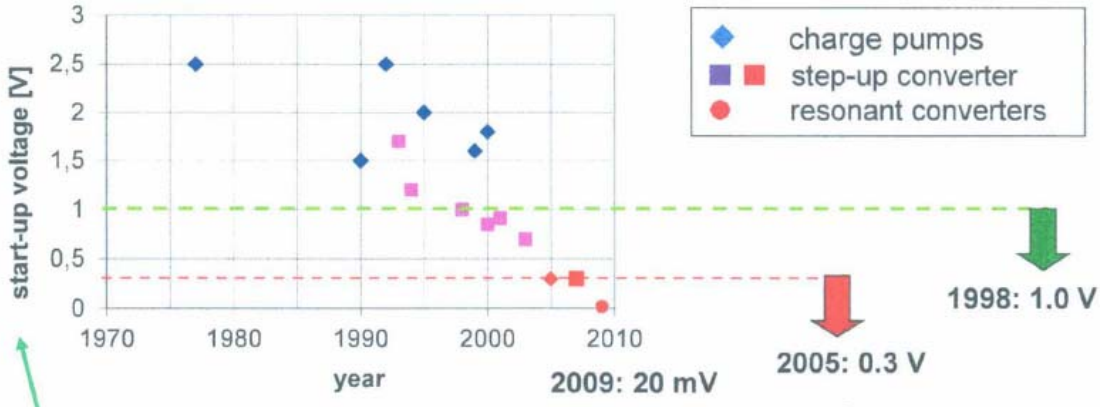

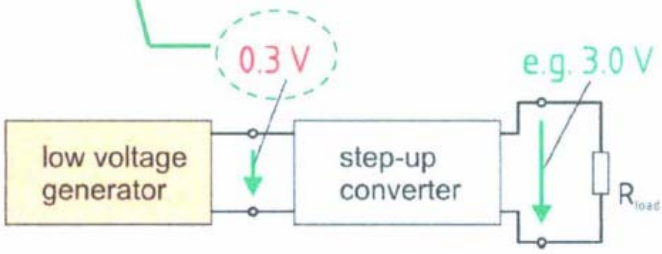

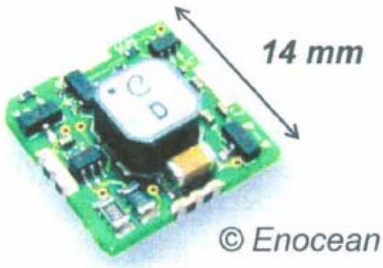

From Peter Woias, FSRM-EMPA Workshop on Energy Harvesting, 2021

Energy Harvesting - Power Management ICs: a few examples

Texas Instruments TI BQ25504

ultra-low-power DC/DC Boost Converter with ….

nano-power management:	*self-supply current I_Q < 330 nA*
programmable MPPT:	*optimal energy extraction from different generators*
low input voltage, when working:	*$V_{IN} \geq 80$ mV*
low cold-start voltage:	*$V_{IN} \geq 330$ mV*

adjustable over/under-voltage for different types of storages:

- thin-film batteries
- capacitors and supercapacitors
- Li-ion batteries

BQ25505 tailored only for Li-Ion batteries

© Texas Instruments

From Peter Woias, FSRM-EMPA Workshop on Energy Harvesting, 2021

Energy Harvesting - Power Management ICs: a few examples

Linear Technology LTC 3588

nanopower energy harvesting power supply for piezoelectric harvesters

wide input voltage range:	V_{IN} = 2.7 … 20V
integrated low-loss full-wave bridge rectifier	
high efficiency integrated hysteretic buck DC/DC	
selectable output voltages:	*V_{out} = 1.8V, 2.5V, 3.3V, 3.6V*

Other decices from LT

- LTC 3106 (solar)
- LTC 3107 (thermal and solar)
- LTC 3108 (thermal)
- LTC 3109 (thermal)

100mA Piezoelectric Energy Harvesting Power Supply

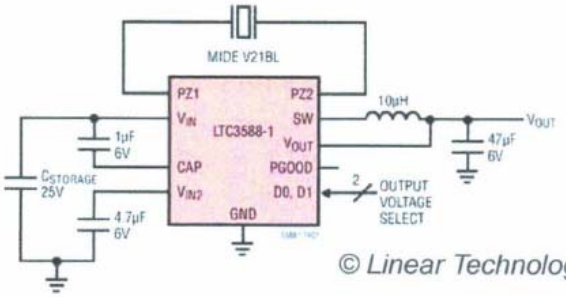

© Linear Technology

From Peter Woias, FSRM-EMPA Workshop on Energy Harvesting, 2021

Energy Harvesting - Power Management ICs: a few examples

ST Microelectronics SPV 1050

ultra-low-power power management IC

for thermoelectric generators and PV modules

low self-supply current:	$I_Q = 1 \ldots 2.8\ \mu A$
low input voltage, when working:	$V_{IN} \geq 150\ mV$
low cold-start voltage:	$V_{IN} \geq 500\ mV$
resistor-programmable MPPT:	*optimal energy extraction from different generators*

integrated battery management with selectable charge and discharge voltage levels

integrated storage capacitor management

integrated power distribution with battery disconnect

two linear low-drop voltage regulators

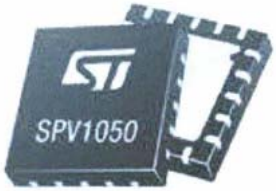

© ST Microelectronics

From Peter Woias, FSRM-EMPA Workshop on Energy Harvesting, 2021

Summary and conclusions

Most state-of-the art power management circuits are not well suited for energy harvesting.

Low-voltage circuits are required for several generators and - almost - unavailable.

Several "old" principles from the "single-transistor" age perform well for energy harvesting, see the more recent LV step-up converters.

Matched power extraction is required and offers significant gains in power.

The performance at "light" loads has to be increased.

In sum, we find a lot of problems today: leakage and standby currents, efficiency versus load range, start-up-voltage vs. supply voltage.

Semiconductor industry has begun to identify this market(... finally).

From Peter Woias, FSRM-EMPA Workshop on Energy Harvesting, 2021

Energy storage

Energy storage: What is required ?

Typical basic conditions in an energy harvesting application

on average: ultra-low-power to low-power situation (1 µW…100 µW…1 mW)

on the spot: high power demand in short times (e.g. wireless transmission)

variable charging and discharging conditions

variable temperature, humidity, pressure, vibration, etc…

Requirements

bridging of variable power requirements (sensing vs. data transmission)

bridging of energy brown-out periods (minutes … hrs … days … months)

low level of storage power management

small size and weight

compatible with a wide range of applications

low toxicity and low environmental concerns

From Peter Woias, FSRM-EMPA Workshop on Energy Harvesting, 2021

Electrical energy storage: What is available ?

Capacitors	Rechargeable batteries
dielectric multilayer capacitors	NiCd …
electrolytic capacitors	NiMH …
supercapacitors …	Li-Ion …
	Li-Po …
electrical energy storage	chemical energy storage
usually, but not always (see super-cap), a linear voltage-charge relation	non-linear voltage-charge relation
dischargeable to 0 V	not dischargeable to 0 V
electrical self-discharge	chemical and electrical self-discharge
usually does not require a dedicated charge and discharge management	requires a dedicated charge and discharge management

From Peter Woias, FSRM-EMPA Workshop on Energy Harvesting, 2021

Capacitors: Summary

Capacitors are very different in their behaviour, depending on their design, material choice and storage principle.

In all cases, a high parallel resistance is desirable to reduce internal power losses and self-discharge.

Details

Many ceramic MLCCs suffer from a loss of capacitance with increasing voltage. They should be used well under their rated voltage to prevent adverse side effects from that.

Electrolytic capacitor should in best case kept "well charged" with under-rated voltages, to keep their leakage current at low values. Low leakage capacitors are preferable.

(Some) supercapacitors provide exceptionally high capacitance values **and** low internal resistances. They are ideal to supply high-power loads over short periods of time. However, drawbacks may be a minimally required charging current and a visible ageing.

From Peter Woias, FSRM-EMPA Workshop on Energy Harvesting, 2021

Rechargeable batteries: Characteristics

© batteryuniversity.com	Ni-Cd	Ni-MH	Pb	Li-Ion	Li-Ion-Mg	Li-Ion-Ph
Gravimetric energy density [Wh/kg]	45…80	60…120	30…50	150…190	100…135	90…120
Cycle life (down to 80% initial capacity)	1500	300…500	200…300	300…500	> 300..500	> 1000 (lab.)
Self-discharge rate [1/month]	20 %	30 %	5 %	< 10 %		
Nominal cell voltage	1.25 V	1.25 V	2 V	3.6 V	3.6 V	3.3 V
Fast charge time	1 hr	2…4 hr	8…16 hr	1.5…3 hr	1 hr or less	
Overcharge tolerance	moderate	low	high	low, cannot tolerate trickle charge		
Temperature at discharge [°C]	-40..+60	-20..+60	-20..+60	-20…60 °C		
Maintenance (e.g. recharge, etc.)	30…60 days	60…90 days	3…6 months	not required		
Toxicity	highly toxic	rel. tow toxicity	toxic	low toxicity		

From Peter Woias, FSRM-EMPA Workshop on Energy Harvesting, 2021

Rechargeable batteries: Which one to choose ?

Some remarks

Rechargeable battery technology is extremily manifold and diverse

Ni-Cd vs. Ni-MH vs. Li-Ion vs. …

Many different ideal and non-ideal features

Pb: *very robust, but low capacity and high toxicity …*

Ni-Cd: *quite robust, but high self discharge and toxicity …*

Li-Ion: *high capacity, but no trickle charge accepted …*

Conclusion

„The" ideal battery for all energy harvesting applications does not exist.

There are some „semi-ideal" combinations, and Li-Ion may be the best.

From Peter Woias, FSRM-EMPA Workshop on Energy Harvesting, 2021

Rechargeable Li-Ion batteries

Advantages of the lithium system

- no memory effect
- accepts charge and discharge current in all states (full, empty, part-charged)
- reasonable (maybe even too high in the future) cell voltage (~ 3V)
- acceptable self-discharge rate (can be below 1%/month)
- prolonged lifetime, if not fully charged/discharged
- high energy density
- small size and weight, low toxicity

Disadvantages

- ages also, if not used
- reduced lifetime, when operated at elevated temperatures
- reduced capacity at low temperatures (like all batteries)
- very limited acceptance of trickle charge
- more sophisticated power management required

© Passeraub - 2021

From Peter Woias, FSRM-EMPA Workshop on Energy Harvesting, 2021

Rechargeable Li-Ion batteries

Typical battery characteristics

	value	comments
nominal cell voltage during discharge	3.0 … 3.7 V	depending on the choice of anode and cathode materials
end-of-discharge voltage	2.0 ….3.0 V	depending on chemistry, deeper discharge will damage the battery
end-of-charge voltage	3.3 … 4.2 V	depending on the choice of anode and cathode materials
standard charge current	0.1…1.0 x C [Ah]/h	
standard charging time	directly related to capacity C	rapid charge at higher currents possible
self-discharge (= loss of capacity)	0.5…3%/month	influence of temperature
charge-discharge cycle lifetime	several 100 max 1000 (not 2000 as manufact. say)	ageing process during every cycle and during storage, heavily influenced by charge, discharge and storage conditions

© Passeraub - 2021

From Peter Woias, FSRM-EMPA Workshop on Energy Harvesting, 2021

Rechargeable Li-ion batteries: Longer lifetime ?

Resumee from all experimental data

What to do for a larger number of cycles and a lower capacity loss:

- Do not leave a full battery connected to a charger
- Do not fully charge (e.g. max to 75%)
- Do not fully discharge (e.g. max. to 20%)
- Reduce the charge current under the allowed limit
- Reduce the discharge current under the allowed limit
- Keep the battery not too hot and not too cold (if possible)

What to pay in effort (and costs) to achieve this:

- lower battery capacity per cycle = larger battery may be required
- (ultra-low-power) battery management required
- combination of battery and capacitor may be required

© Passeraub - 2021

From Peter Woias, FSRM-EMPA Workshop on Energy Harvesting, 2021

Rechargeable batteries: Summary and conclusions

Rechargeable lithium batteries are the premier choice for long-term storage in an energy-autonomous sensor mode. Striking advantages are .. .

- suitable cell voltage
- high energy density
- low self-discharge
- low weight and mass, environmentally acceptable recycling.

For a long lifetime the battery must be operated in an under-rated manner. Suitable measures are .. .

- reduced charge and discharge currents
- reduced over-discharge and under-discharge voltage limits
- no extended trickle or floating charge
- only shallow discharge

© Passeraub - 2021

From Peter Woias, FSRM-EMPA Workshop on Energy Harvesting, 2021

Exercise 1

a) *Read the short description of the solar T-Touch to be found on the Moodle platform → TSM_SmartSens → Energy harvesting*

   i. *Answer the quiz and discuss about the selected solution*

b) *Fill the 2nd quiz as a class and watch for the class-wide results*

   i. *What do you observe? Discuss !*

Exercise 2

a) *Watch the short movie on sustainable dance floor to be found on the Moodle platform → TSM_SmartSens → Energy harvesting*

   i. *Develop a calculation method and estimate the energy produced by one user !*

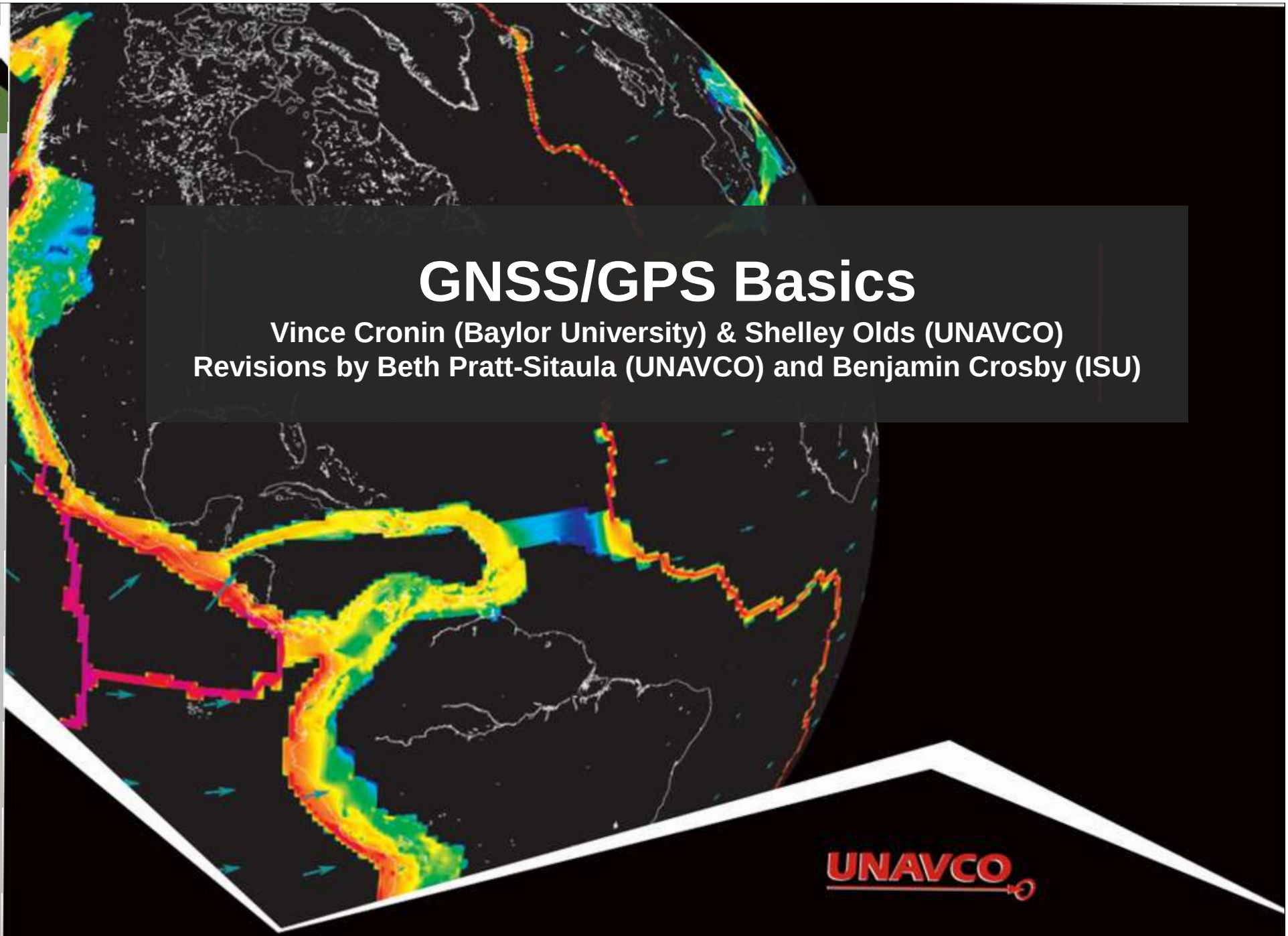

GNSS/GPS Basics

Vince Cronin (Baylor University) & Shelley Olds (UNAVCO)
Revisions by Beth Pratt-Sitaula (UNAVCO) and Benjamin Crosby (ISU)

UNAVCO

Version May 2019

Motivations

1. Describe the Global Navigation Satellite System (GNSS) and how it enables positioning
2. Distinguish different grades of GNSS receivers, their uses, and their accuracies.
3. Highlight applications of GNSS in the Geosciences

GPS receivers are all around us

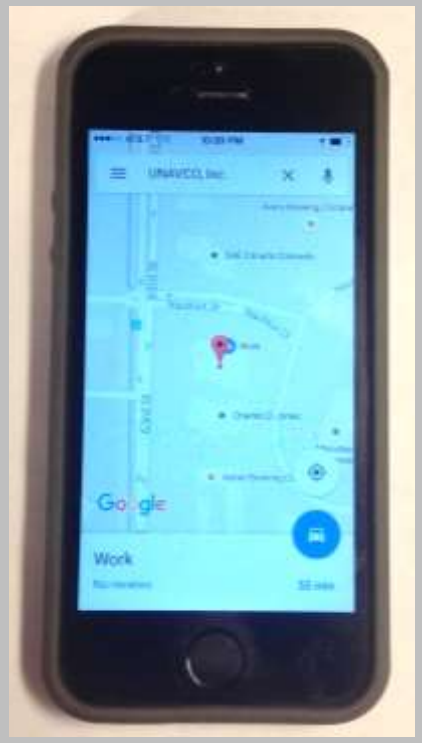

GPS provides 3D positioning

- Positions on the earth can be reported using:
  - Cartesian coordinates (relative to the earth's center)
  - Geographic coordinates (lat., long., elev., in deg.)
  - Projected coordinates (UTM, state plane, in m or ft)

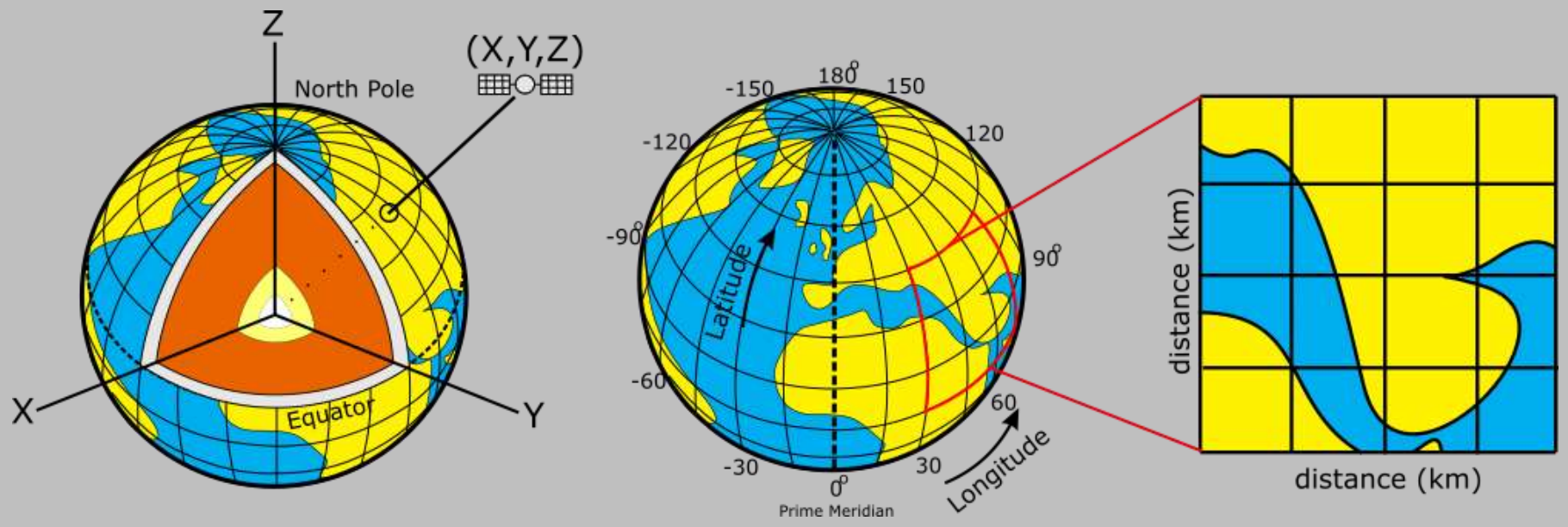

Cartesian (X,Y,Z) Geographic System Projected System

(Figures: Ian Lauer, modified from Common Domain)

Typical GPS coordinates

- Most GPS data is recorded and reported using:
  - Geographic Coordinates
    - World Geodetic System 1984 (WGS 84)
      - A reference surface or datum composed of an ellipsoid
      - A geoid model (gravitational equipotential surface, EGM96)
    - Remember, elevations can be reported as ellipsoidal heights or orthometric heights

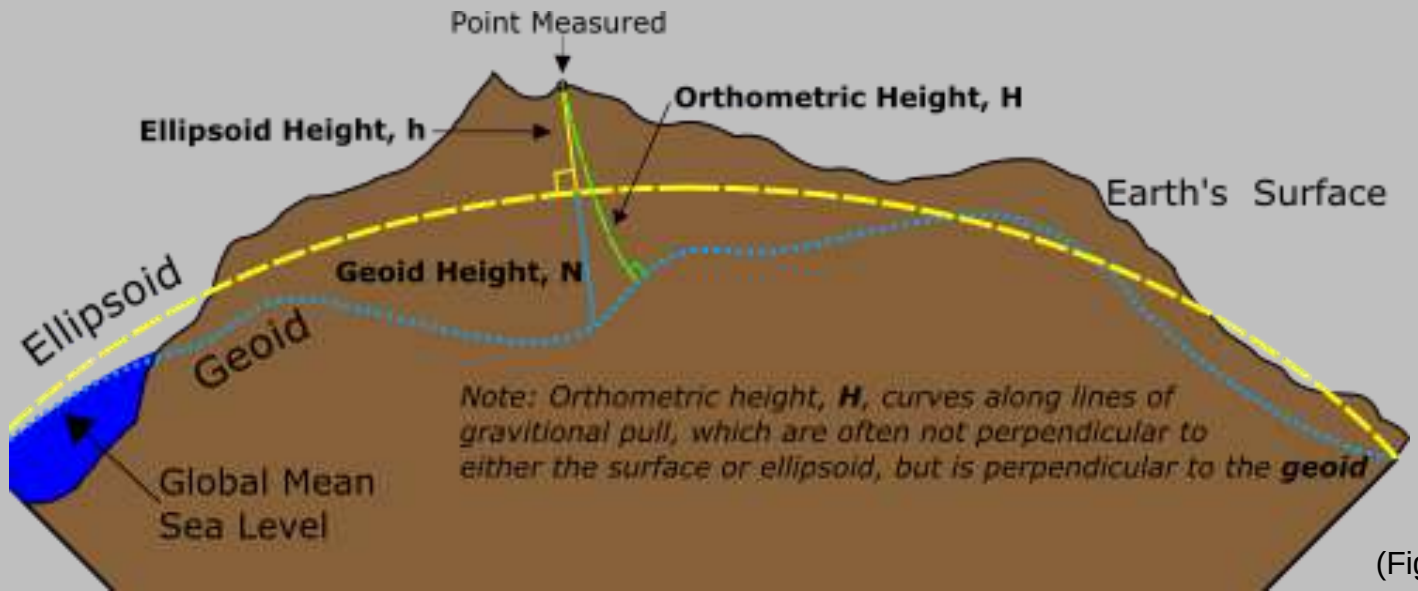

(Figure: Ian Lauer)

Multiple satellite systems

- There are multiple Global Navigation Satellite Systems (GNSS)
  - **GPS**: USA, global
  - **GLONAS**: Russia, global
  - After 2020:
    - **BieDou**: China, global
    - **Galileo**: Europe, global
  - India, France, and Japan: developing regional systems

Global Positioning System

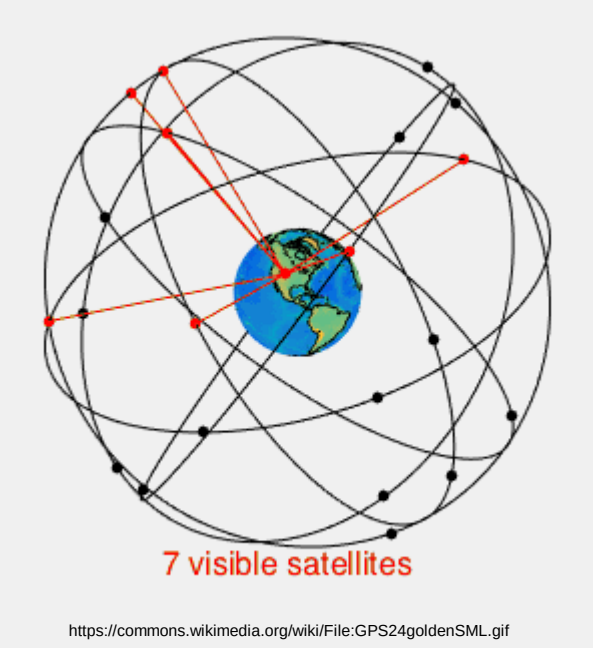

https://commons.wikimedia.org/wiki/File:GPS24goldenSML.gif

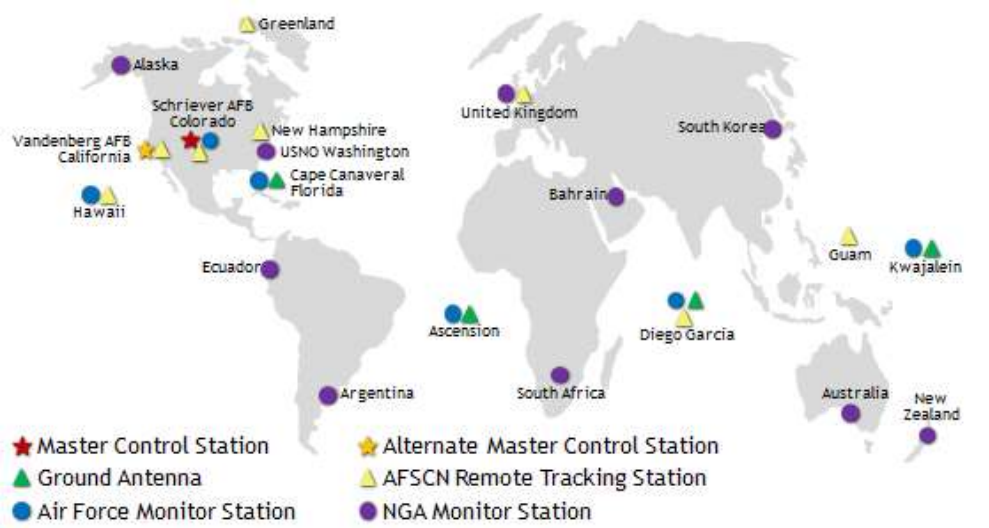

- GPS: the US System
- ~32 satellites
- 20,200 km altitude
- 55 degrees inclination
- 12 hour orbital period
- Need 4 satellites to be accurate
- Ground control stations
- Each satellite passes over a ground monitoring station every 12 hours

GPS satellite

Artist's conception of a GPS Block II-F satellite in Earth orbit. (Public domain from NASA) https://en.wikipedia.org/wiki/Global_Positioning_System

Satellite sends orbit and clock Info

- GNSS satellites include almanac and ephemeris data in the signals they transmit
  - **Almanac data** are coarse orbital parameters for all GPS satellites. Communicated to your GPS so you can track satellites.
  - **Ephemeris data** are very precise orbital and clock correction for each particular GPS satellite—<u>necessary for precise positioning</u>

http://gpsinformation.net/main/almanac.txt

Antennas receive data streams

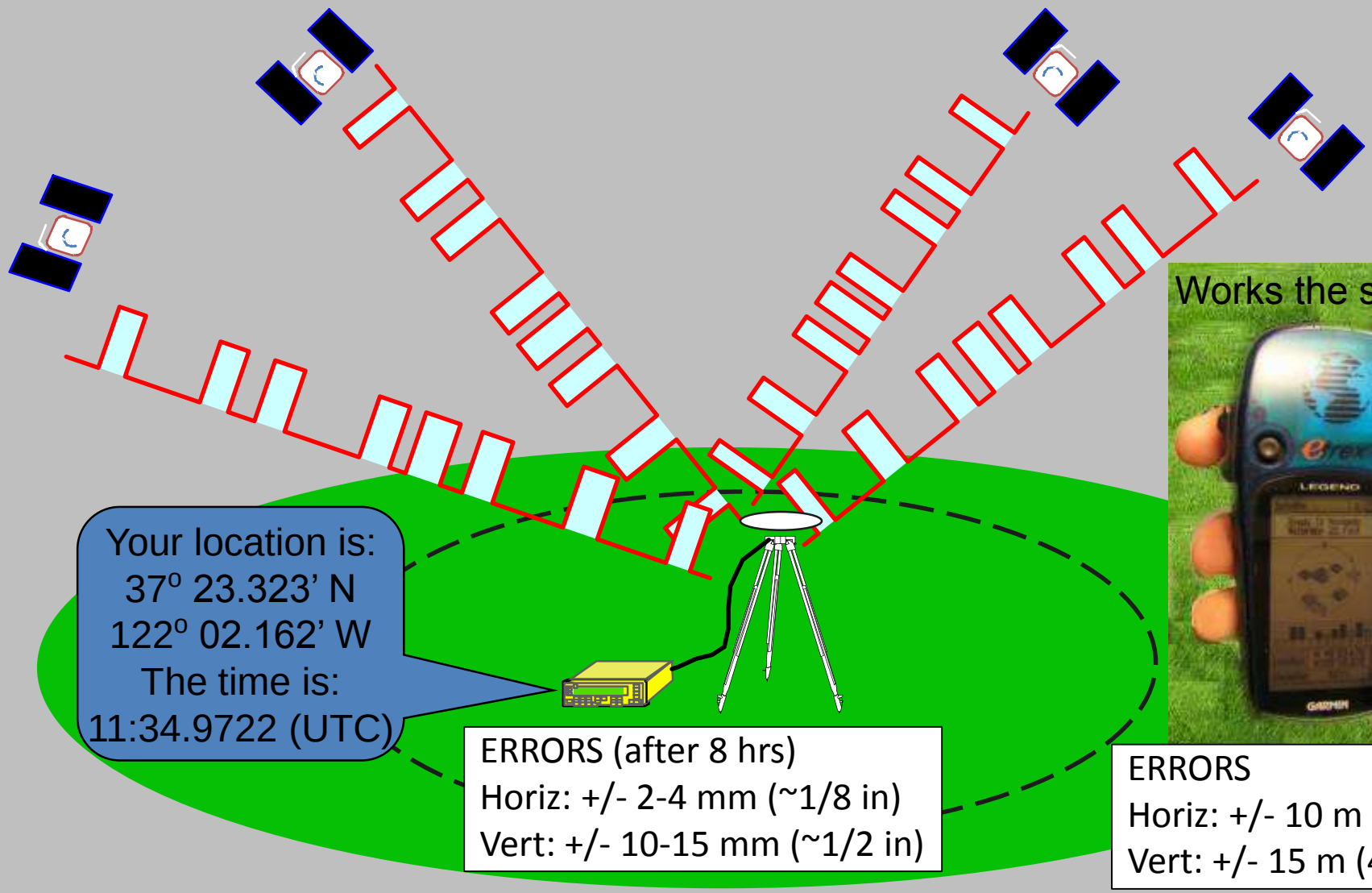

ERRORS
Horiz: +/- 10 m (30 ft)
Vert: +/- 15 m (45 ft)

Measuring the range to the satellite

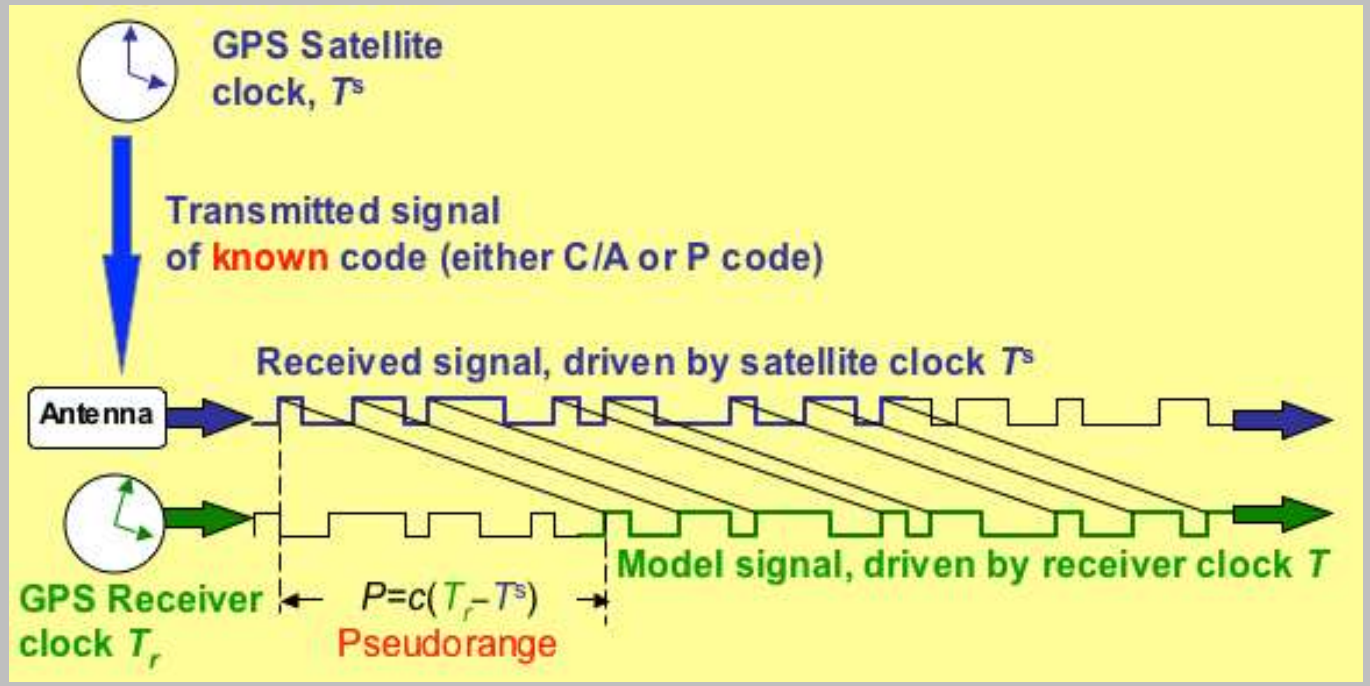

- Radio signal from satellite tells GNSS receiver the satellite-clock time and provides the most recent corrections to the satellite's position relative to Earth (ephemeris)
- GNSS receiver compares multiple satellite-times to the receiver-time to determine the distance to each satellite

How actual location is determined

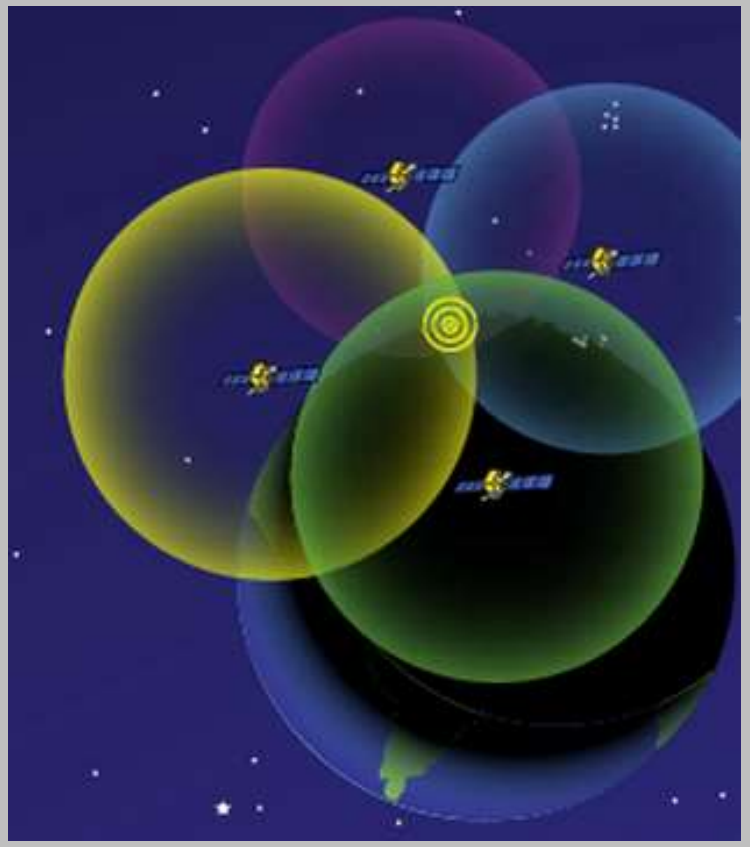

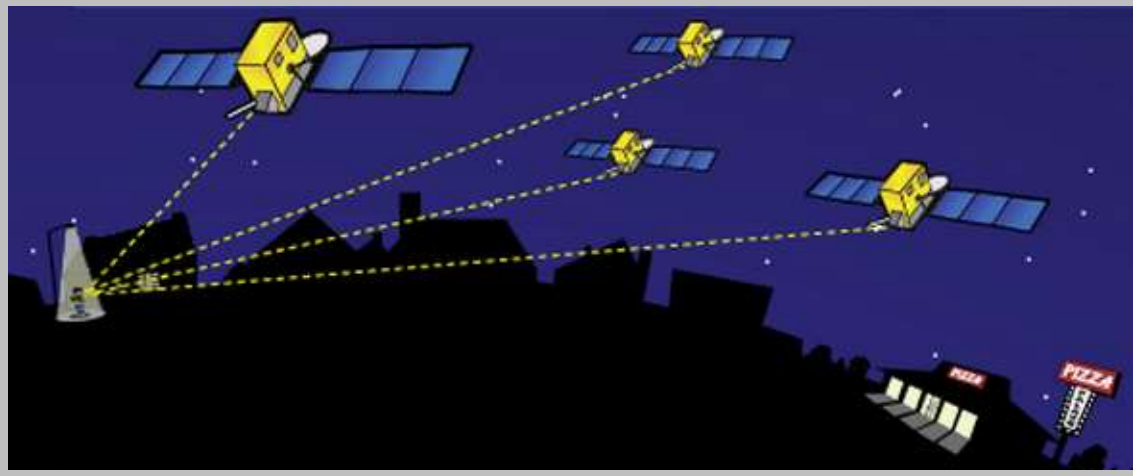

http://spaceplace.nasa.gov/gps-pizza/en/

Antenna position is determined by calculating the distances to at least 4 satellites. This enables the solving for four variables: *x, y, z* and time using **trilateration**.

Anatomy of a high-precision permanent GNSS station

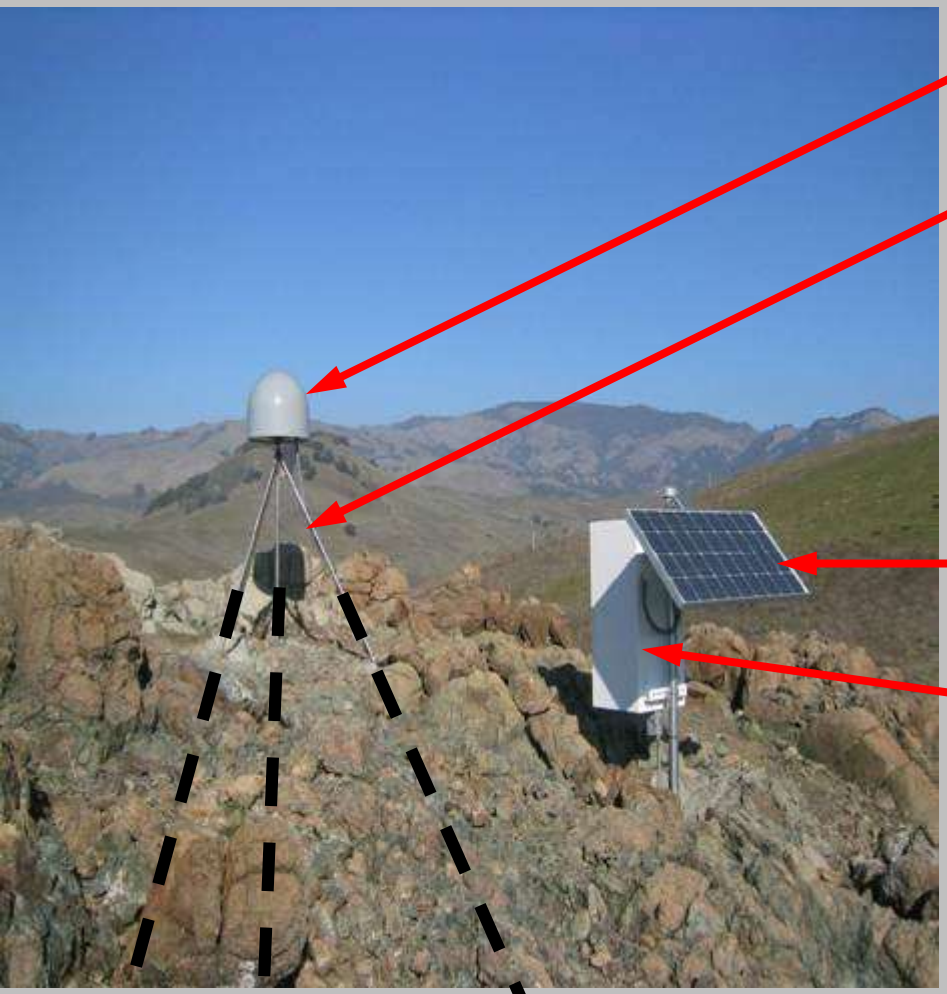

GNSS antenna inside of dome

Monument solidly attached into the ground with braces.

If the ground moves, the station moves.

Solar panel for power

Equipment enclosure

- GNSS receiver
- Power/batteries
- Communications/ radio/ modem
- Data storage/ memory

High-precision GNSS requires…

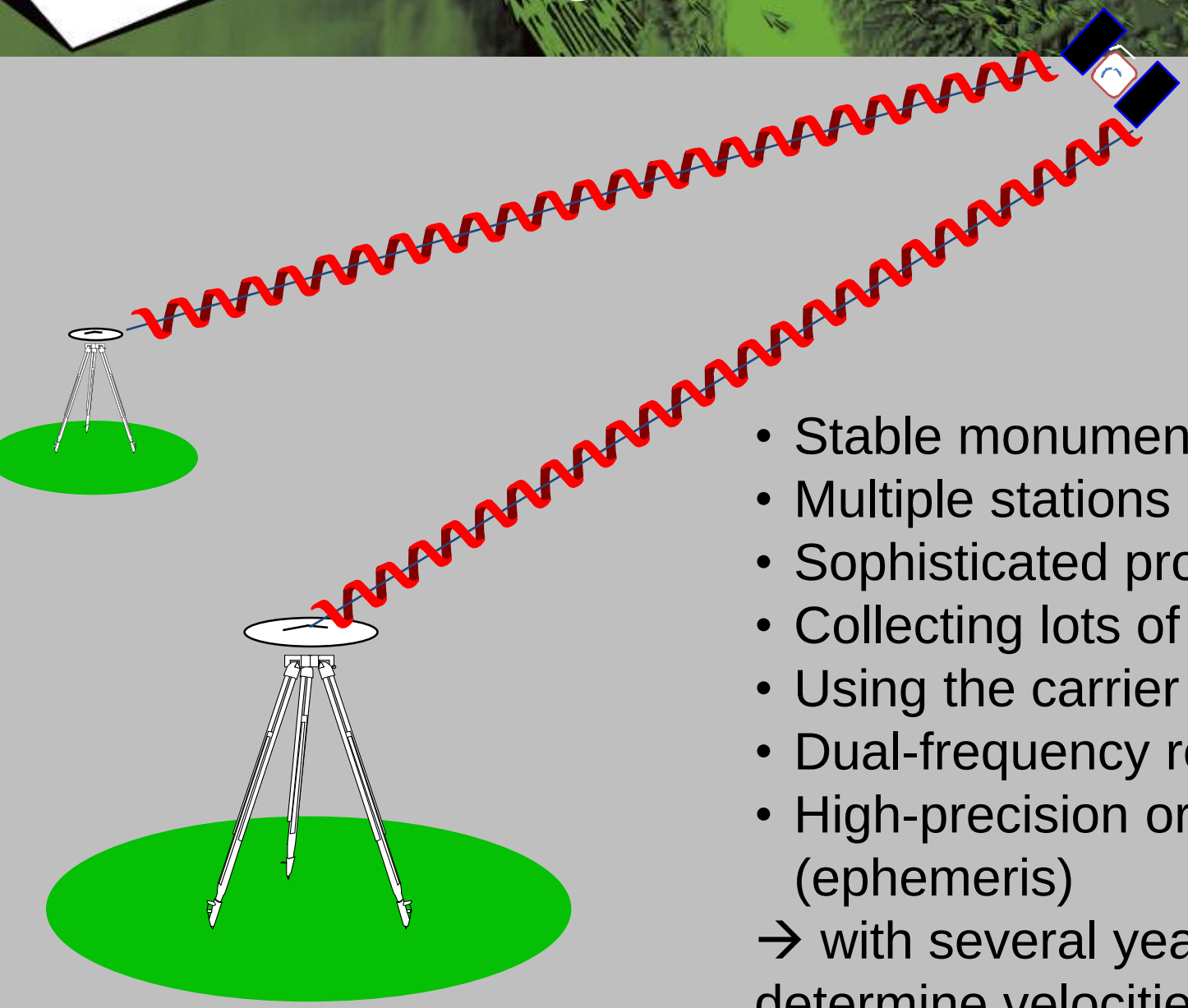

- Stable monuments
- Multiple stations
- Sophisticated processing
- Collecting lots of data
- Using the carrier phase
- Dual-frequency receivers
- High-precision orbital information (ephemeris)

→ with several years of data can determine velocities to 1–2 mm/yr

Sources of error

Some GPS Error Sources

- Selective availability (ephemeris data encrypted by military – ended in 2000)
- Satellite orbit irregularities
- Satellite and receiver clock errors
- **Atmospheric delays** – speed of light is affected by water content and other variables in the atmosphere
- **Multi-path** – GPS signals can bounce off the ground and then enter the antenna, rather than only entering from above
- **Human error** – Incorrect base or rover antenna heights, errors in post-processing, datum and projection errors.

Grades of GNSS Systems

- Consumer or Recreational Grade
  - Phones, tablets, watches, hiking devices
  - ~5 meters, No post-processing required
- Mapping Grade
  - Purpose built, GIS enabled, data collectors
  - ~30 cm, Post-processing/correction required
- Survey Grade
  - Professional tools, Longer occupations, Static and kinematic devices
  - ~3 mm to 2 cm precision. Considerable post-processing required

Precision depends on system

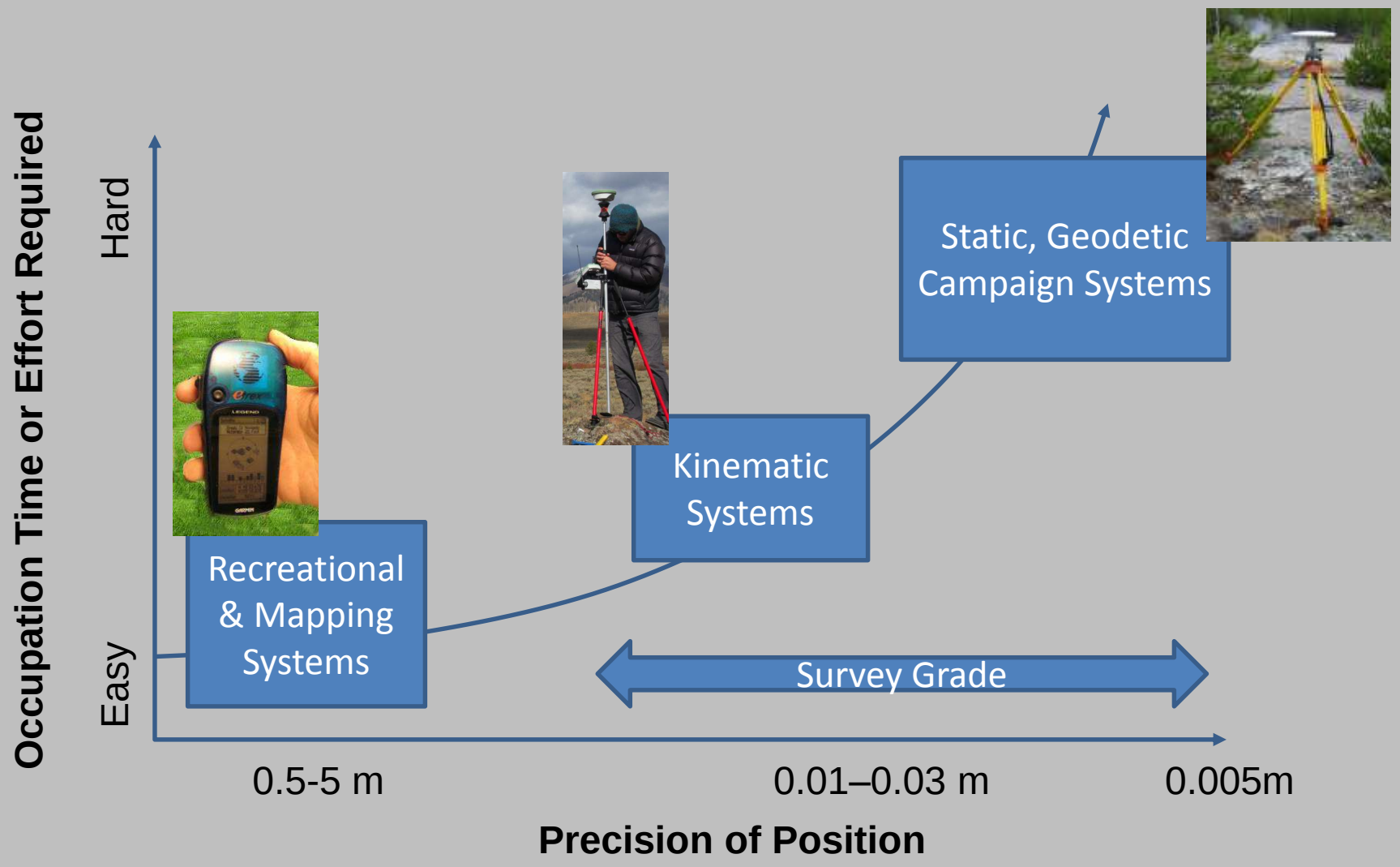

(Images: Ben Crosby)

Applications of GNSS

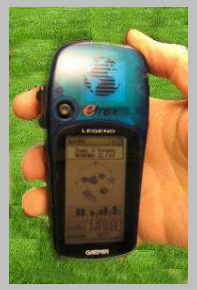

- Recreational & Mapping Systems (phones, consumer-type, mobile GIS devices)
  - Inexpensive, low complexity, short occupations, rapid results, low-precision positions

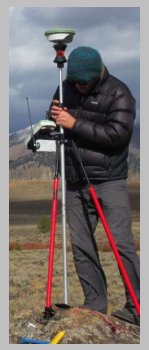

- Kinematic Systems (Unit 2)
  - Expensive, moderate complexity, short occupations, positions can be rapid or require post-processing, high-precision positions
- Static Systems (Unit 3)
  - Expensive, high complexity, long occupations required, long and complex post-processing required, extremely high-precision positions.

(Images: Ben Crosby)

Example 1: Tracking position

- Using Recreational Systems
  - Use a phone to track your positon during a field day.
  - Can quickly assess the area or position of an object.

From the field…

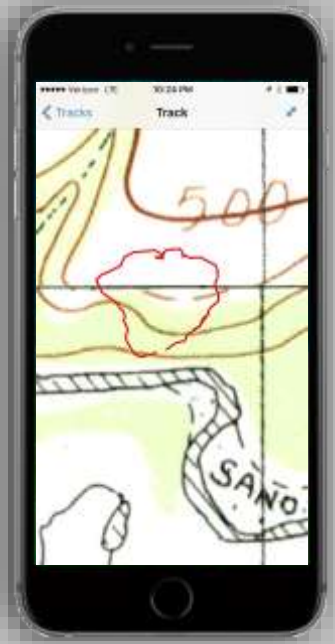

…to the phone…

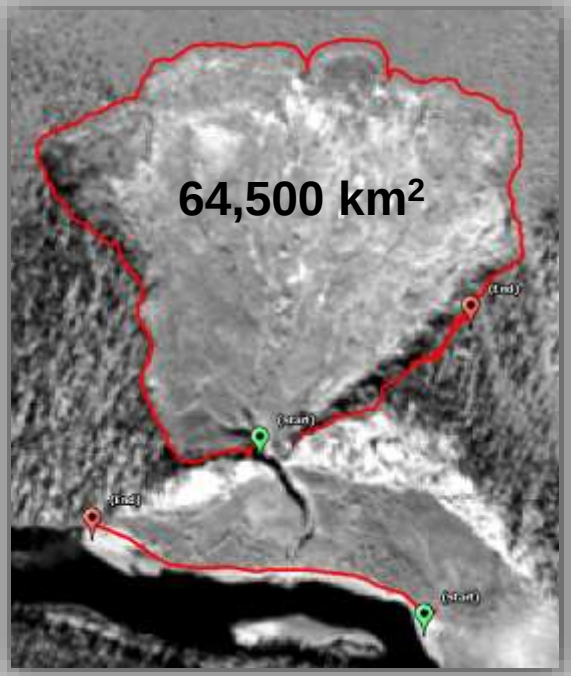

…to analysis in GIS.

(Images: Ben Crosby)

Example 2: Creating topography

- Using Kinematic Systems
  - Quickly measure many points with high accuracy and precision
  - Compare different surfaces to quantify permafrost thaw

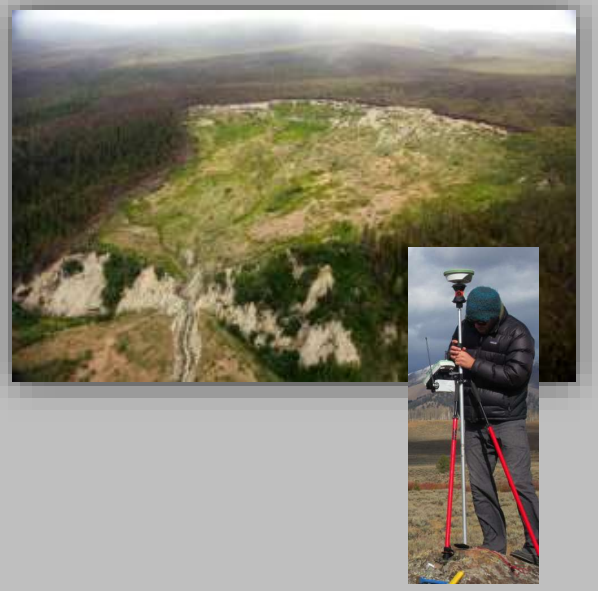

From the field …

… o post-processed points …

… to surface generation using GIS.

(Images: Ben Crosby)

Example 3: Change detection

- Using Static Systems
  - Measure a small number of points over a long duration
  - Can resolve small changes in position, e.g. tracking landslides

From the field …

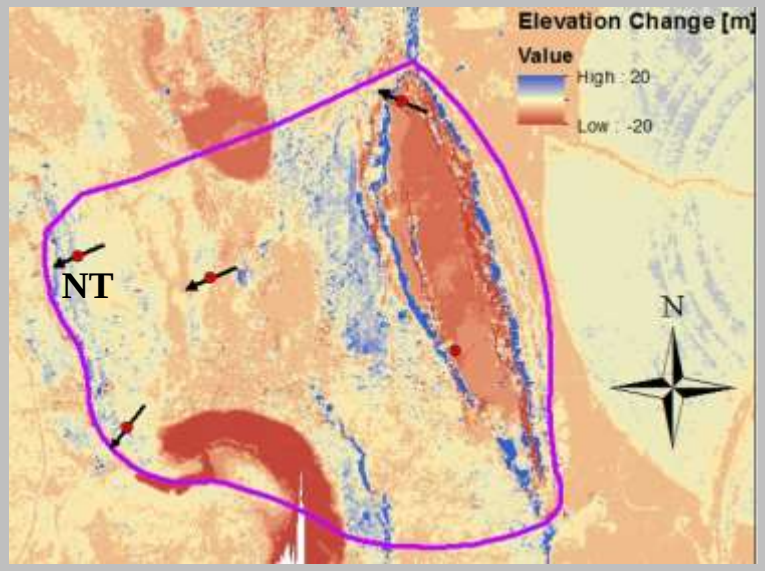

… to **four** post-processed points …

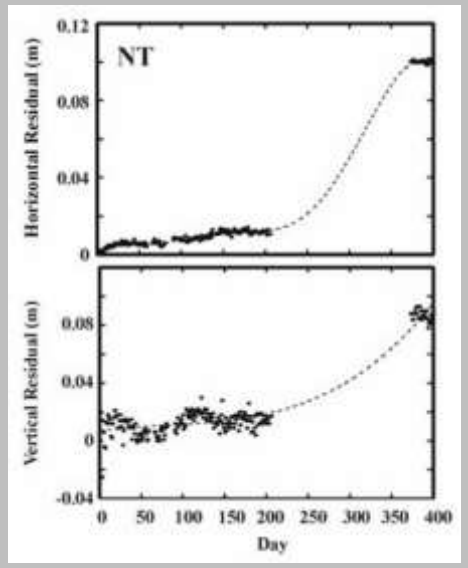

… to mm scale time series.

(Dorsch, 2004 Thesis)

Societal value of GNSS-enabled research

- Most people use it for location and navigation
- But … GNSS-enabled science also provides:
  - Hazard early warning systems, saving lives
    - Landslide activity
    - Volcano inflation
    - Fault movement
  - Precise measurements of objects
    - Water resources (aquifers, snow pack, etc.)
    - Tracking of objects (organisms, rocks, currents)
  - Without GNSS, we could not know where things are when without directly measuring them.