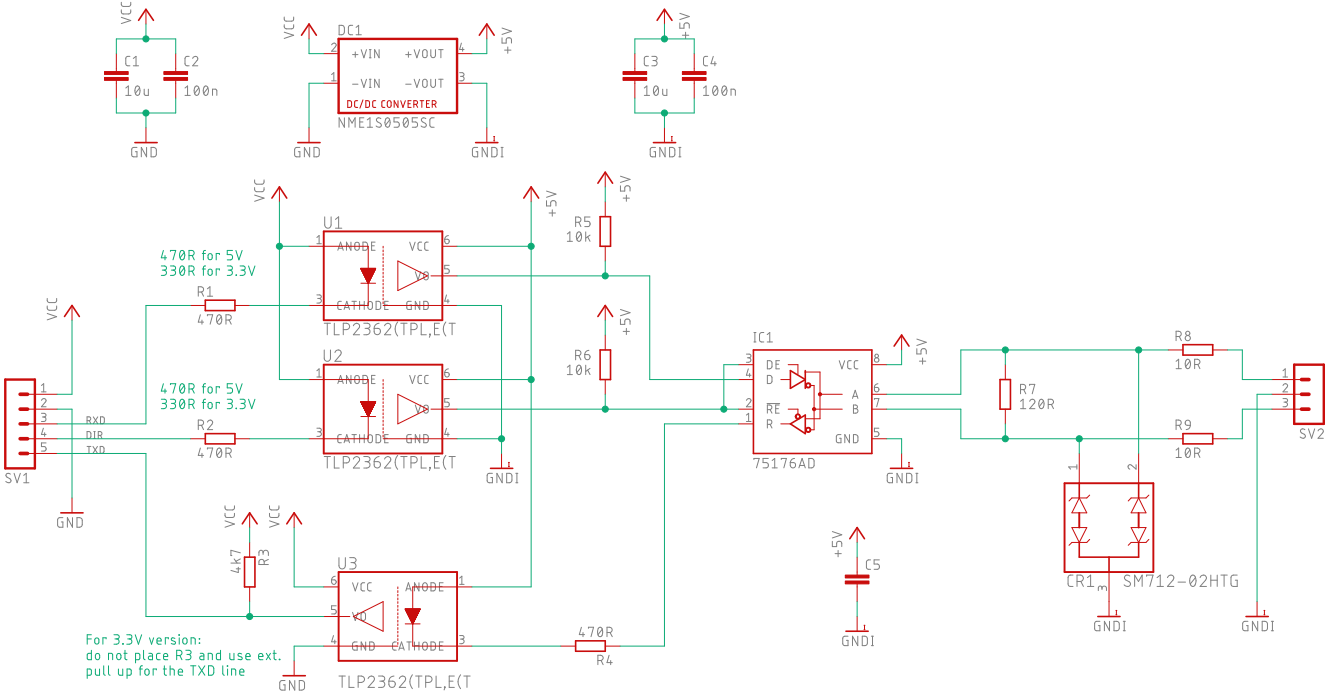

Isolated_DMX_Module	
01.06.2025 16:20	
Sheet: 1/1	