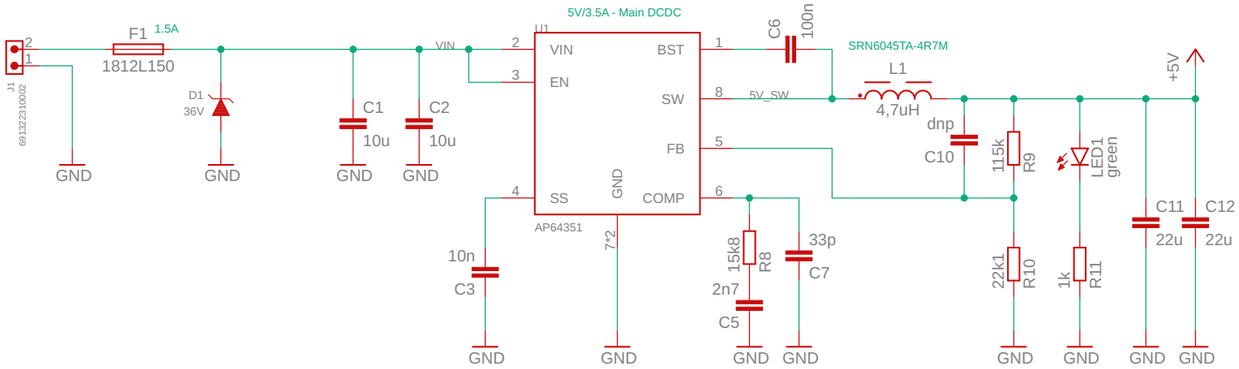

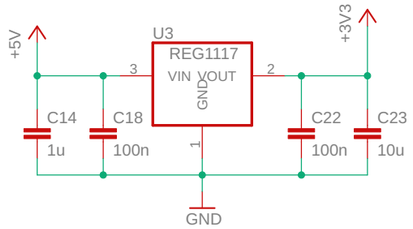

RasPi	Seeed Hat	RAK Hat	WaveShare
GPIO0			
GPIO1			
GPIO2	SDA	nc	SDA
GPIO3	SCL	nc	SCL
GPIO4	nc	nc	
GPIO5	SX1262_RST	nc	
GPIO6	SX1262_CS	nc	
GPIO7	nc	GPIO6	
GPIO8	SX1302_CS	SX1302_CS	SX1302_CS
GPIO9	MISO	MISO	MISO
GPIO10	MOSI	MOSI	MOSI
GPIO11	SCK	SCK	SCK
GPIO12	GPS WAKE	GPS WAKE	
GPIO13	nc	nc	
GPIO14	GPS RX	GPS RX	GPS RX
GPIO15	GPS TX	GPS TX	GPS TX
GPIO16	nc	nc	
GPIO17	RESET	RESET	
GPIO18	SX1262_BUSY	nc	
GPIO19	nc	nc	
GPIO20	nc	nc	GPIO6
GPIO21	nc	nc	
GPIO22	nc	nc	
GPIO23	SX1262_IO1	nc	RESET
GPIO24	SX1262_IO2	nc	
GPIO25	GPS RESET	GPS RESET	
GPIO26	nc	nc	
GPIO27	nc	nc	

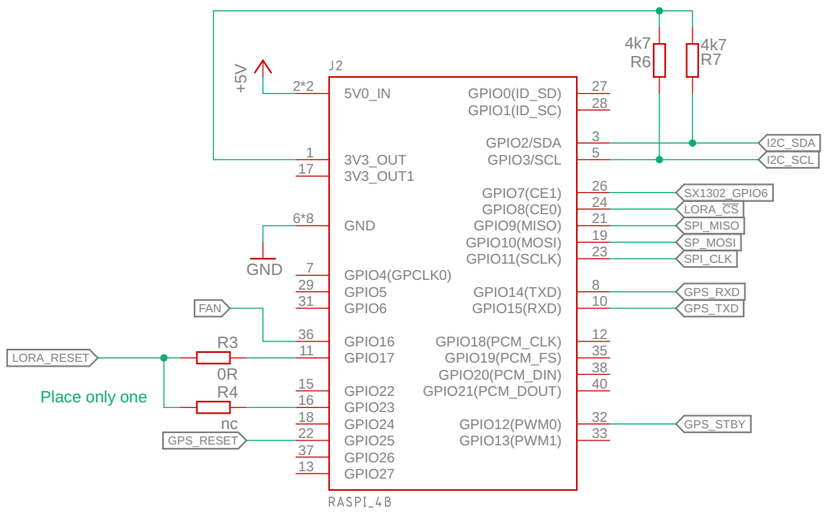

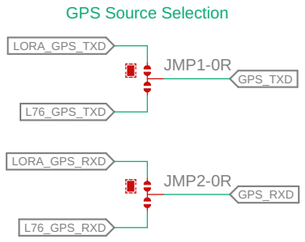

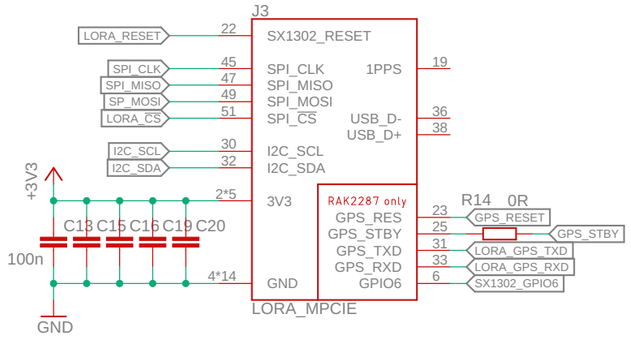

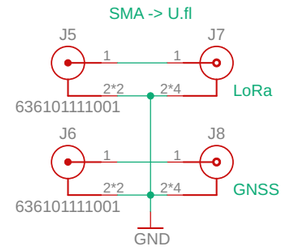

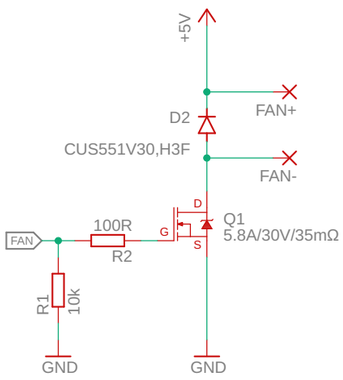

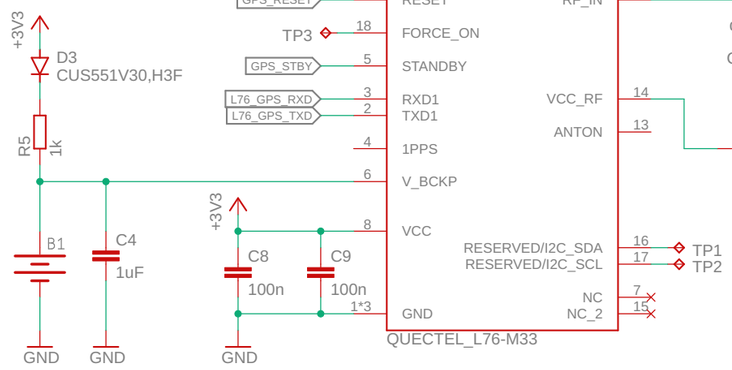

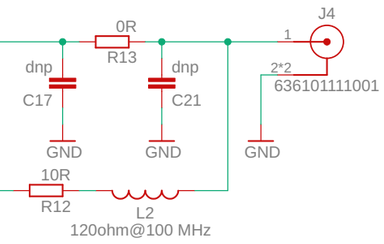

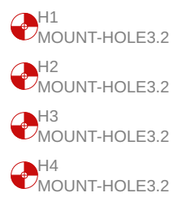

Fan on OpenWrt RasPi:
https://forum.openwrt.org/t/official-raspberry-pi-4-fan-yes-instructions-inside/93975

Seeed Hat: https://wiki.seeedstudio.com/WM1302_Pi_HAT/
RAK Hat: https://docs.rakwireless.com/Product-Categories/WisHat/RAK2287-RAK5146-Pi-HAT/Datasheet/#hardware

Tasmodul_RasPi_LoRa
03.03.2024 10:25
Sheet: 1/1