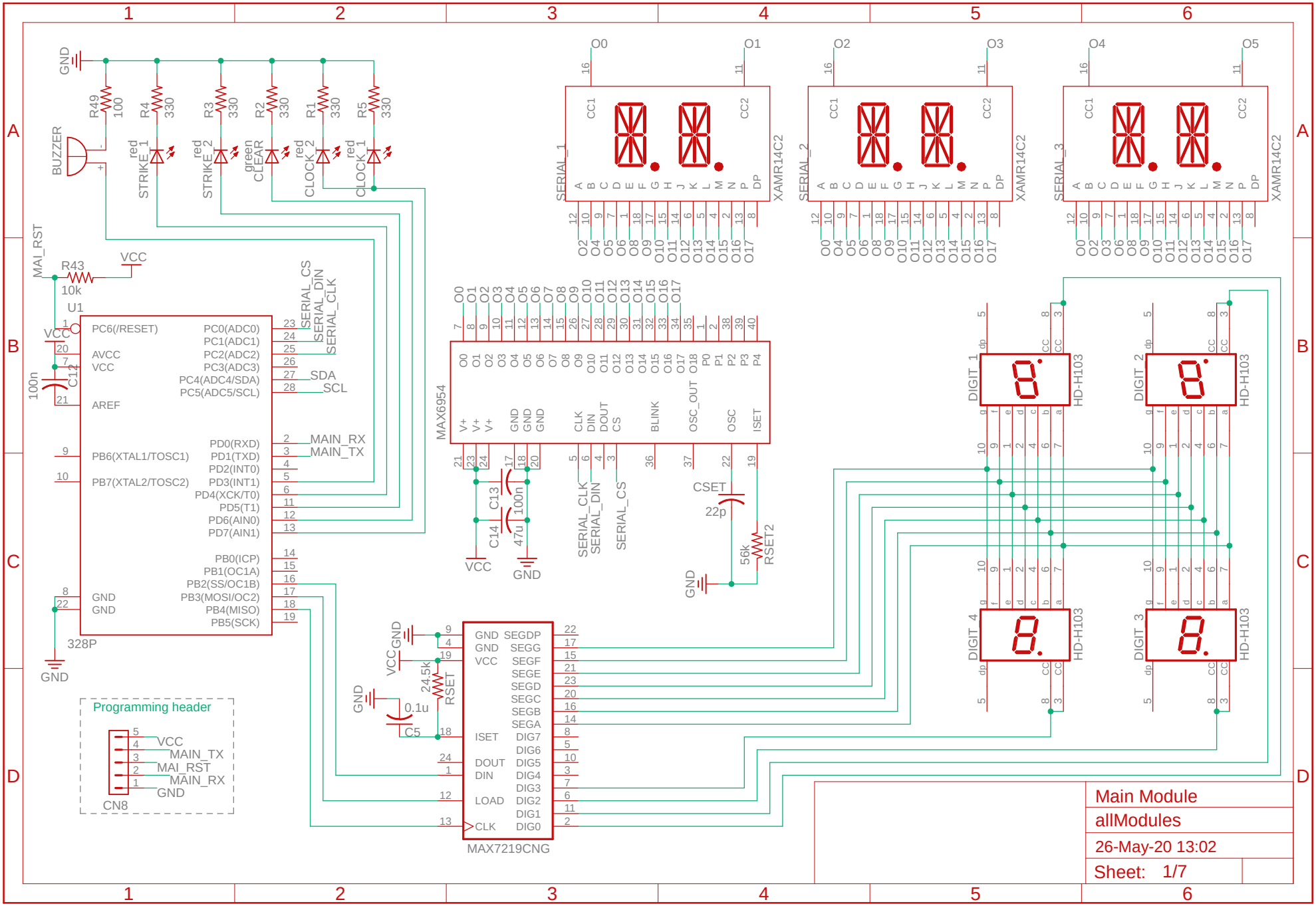

26-May-20 13:04 C:\Users\sebth\Desktop\p-ktane\Design\Schematics\allModules.sch (Sheet: 1/7)

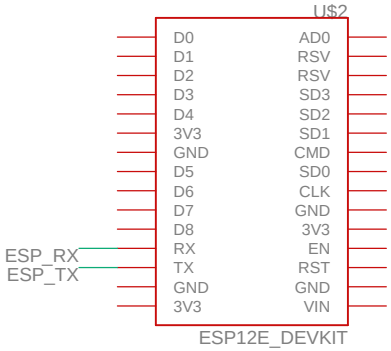

Config Module
allModules
26-May-20 13:02
Sheet: 2/7

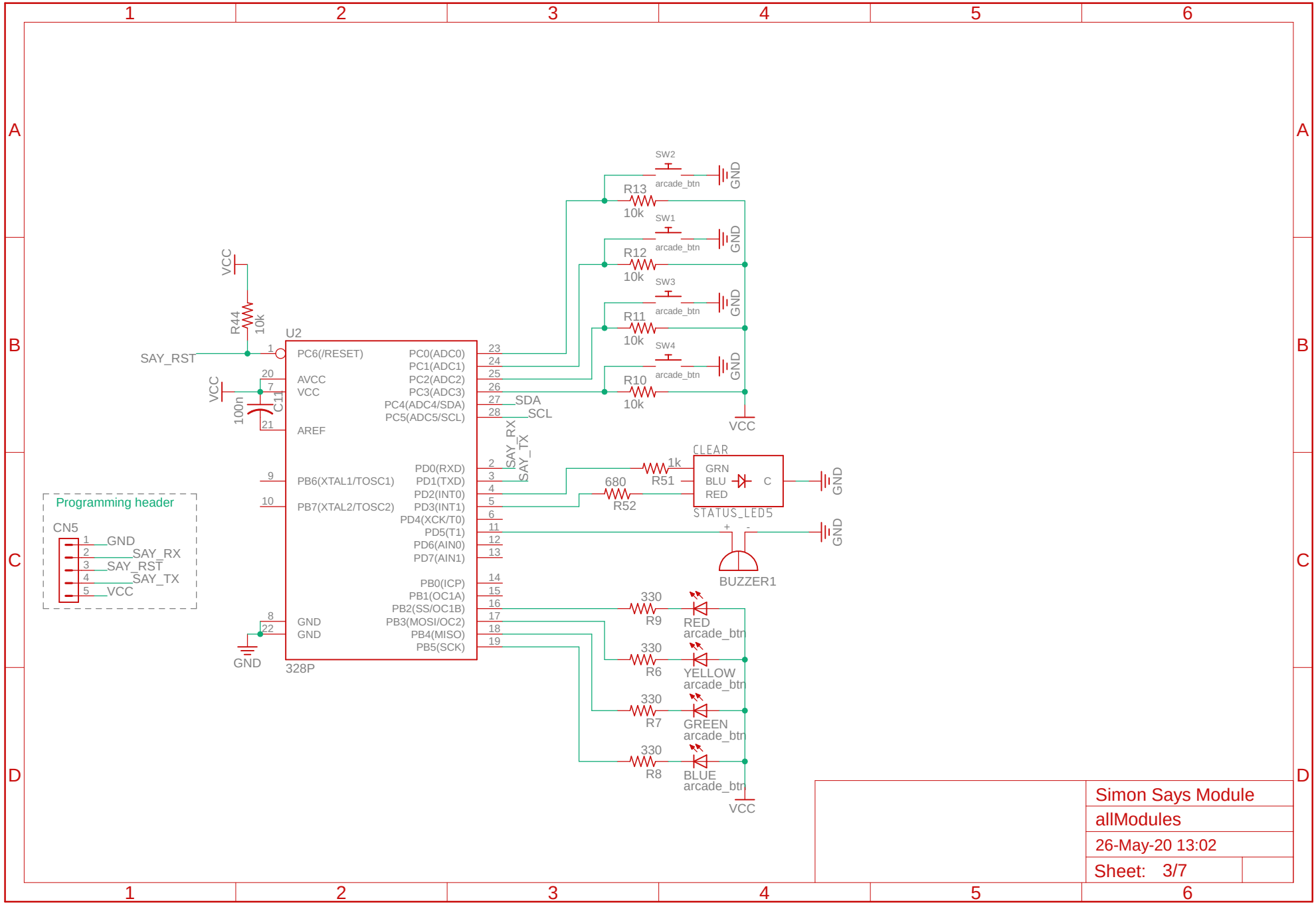
U2
328P
PC6(/RESET)
AVCC
VCC
AREF
PB6(XTAL1/TOSC1)
PB7(XTAL2/TOSC2)
GND
GND
PC0(ADC0)
PC1(ADC1)
PC2(ADC2)
PC3(ADC3)
PC4(ADC4/SDA)
PC5(ADC5/SCL)
PD0(RXD)
PD1(TXD)
PD2(INT0)
PD3(INT1)
PD4(XCK/T0)
PD5(T1)
PD6(AIN0)
PD7(AIN1)
PB0(ICP)
PB1(OC1A)
PB2(SS/OC1B)
PB3(MOSI/OC2)
PB4(MISO)
PB5(SCK)
SAY_RST
VCC
R44
10k
C11
100n
SDA
SCL
SAY_RX
SAY_TX
SW2
SW1
SW3
SW4
arcade_btn
R13
R12
R11
R10
10k
GND
VCC
CLEAR
GRN
BLU
RED
C
STATUS_LED5
R51
1k
R52
680
BUZZER1
R9
R6
R7
R8
330
RED
YELLOW
GREEN
BLUE
Programming header
CN5
GND
SAY_RX
SAY_RST
SAY_TX
VCC
Simon Says Module
allModules
26-May-20 13:02
Sheet: 3/7

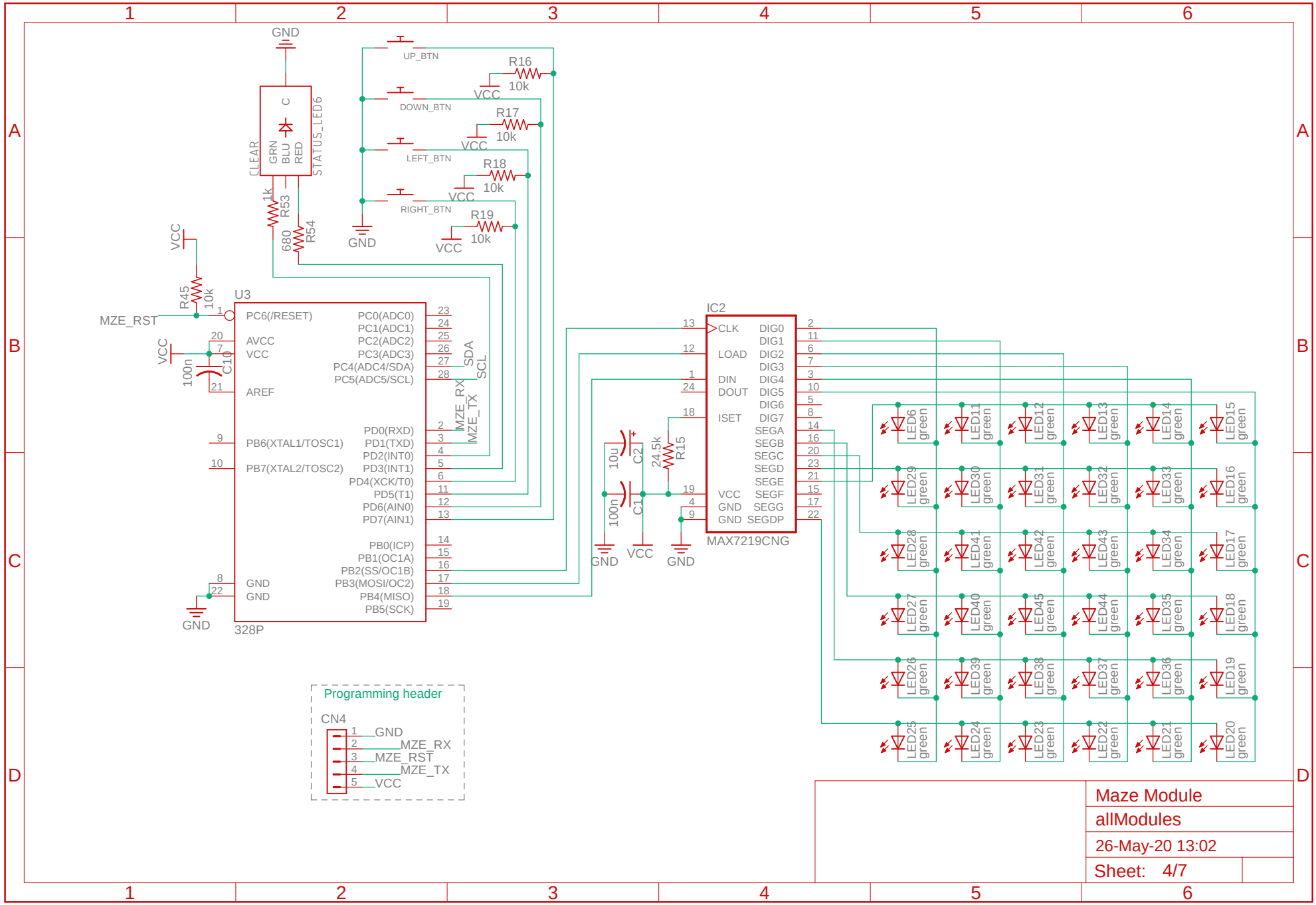
GND
UP_BTN
DOWN_BTN
LEFT_BTN
RIGHT_BTN
R16 10k
R17 10k
R18 10k
R19 10k
VCC
CLEAR
GRN
BLU
RED
C
STATUS_LED6
1k R53
680 R54
R45 10k
MZE_RST
U3
PC6(/RESET)
AVCC
VCC
AREF
PB6(XTAL1/TOSC1)
PB7(XTAL2/TOSC2)
GND
GND
PC0(ADC0)
PC1(ADC1)
PC2(ADC2)
PC3(ADC3)
PC4(ADC4/SDA)
PC5(ADC5/SCL)
PD0(RXD)
PD1(TXD)
PD2(INT0)
PD3(INT1)
PD4(XCK/T0)
PD5(T1)
PD6(AIN0)
PD7(AIN1)
PB0(ICP)
PB1(OC1A)
PB2(SS/OC1B)
PB3(MOSI/OC2)
PB4(MISO)
PB5(SCK)
SDA
SCL
MZE_RX
MZE_TX
C10 100n
328P
IC2
CLK
LOAD
DIN
DOUT
ISET
VCC
GND
GND
DIG0
DIG1
DIG2
DIG3
DIG4
DIG5
DIG6
DIG7
SEGA
SEGB
SEGC
SEGD
SEGE
SEGF
SEGG
SEGDP
MAX7219CNG
C1 100n
C2 10u
R15 24.5k
LED6 green
LED11 green
LED12 green
LED13 green
LED14 green
LED15 green
LED29 green
LED30 green
LED31 green
LED32 green
LED33 green
LED16 green
LED28 green
LED41 green
LED42 green
LED43 green
LED34 green
LED17 green
LED27 green
LED40 green
LED45 green
LED44 green
LED35 green
LED18 green
LED26 green
LED39 green
LED38 green
LED37 green
LED36 green
LED19 green
LED25 green
LED24 green
LED23 green
LED22 green
LED21 green
LED20 green
Programming header
CN4
1 GND
2 MZE_RX
3 MZE_RST
4 MZE_TX
5 VCC
Maze Module
allModules
26-May-20 13:02
Sheet: 4/7

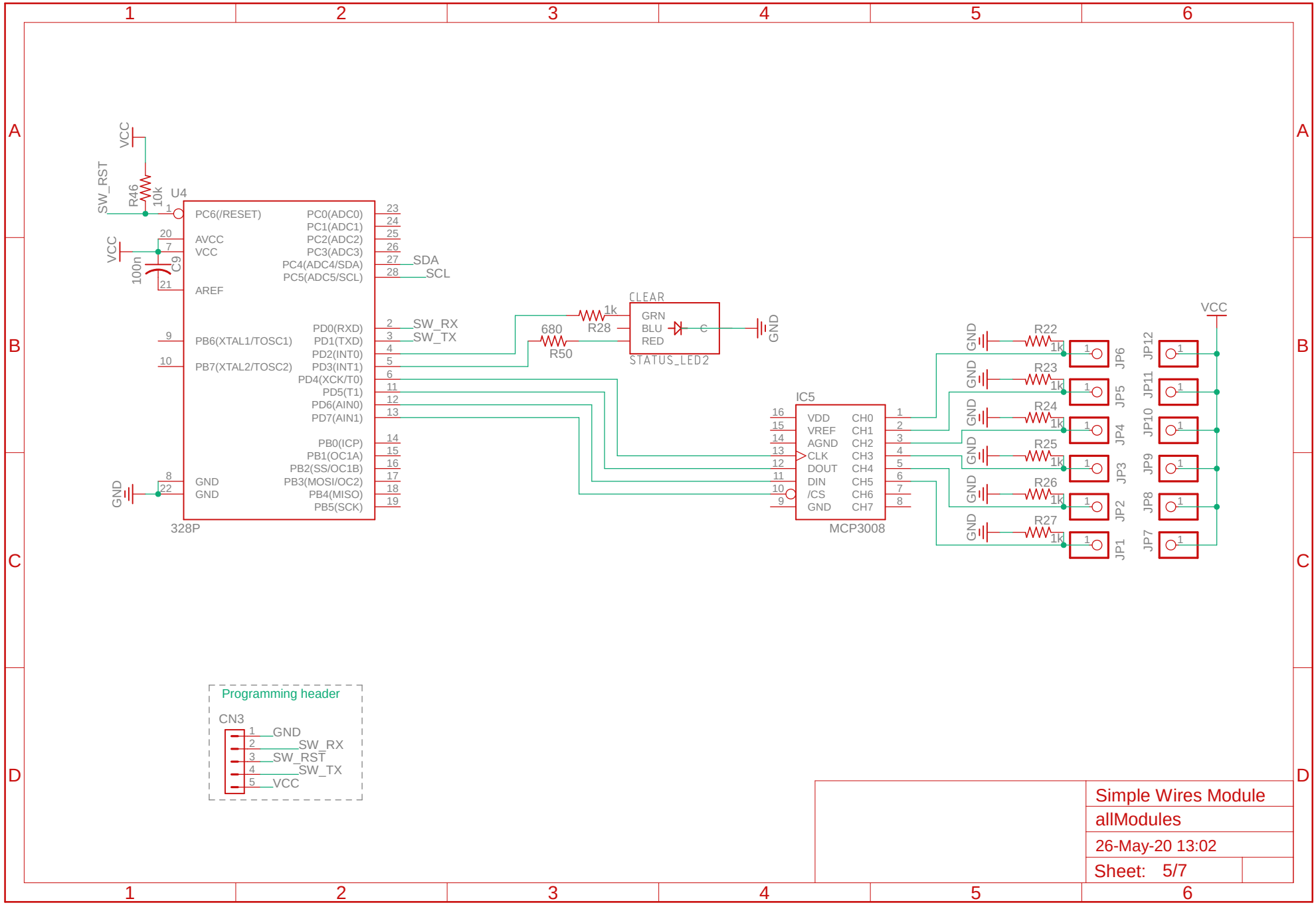
VCC
SW_RST
R46
10k
U4
PC6(/RESET)
AVCC
VCC
AREF
PB6(XTAL1/TOSC1)
PB7(XTAL2/TOSC2)
GND
GND
PC0(ADC0)
PC1(ADC1)
PC2(ADC2)
PC3(ADC3)
PC4(ADC4/SDA)
PC5(ADC5/SCL)
PD0(RXD)
PD1(TXD)
PD2(INT0)
PD3(INT1)
PD4(XCK/T0)
PD5(T1)
PD6(AIN0)
PD7(AIN1)
PB0(ICP)
PB1(OC1A)
PB2(SS/OC1B)
PB3(MOSI/OC2)
PB4(MISO)
PB5(SCK)
SDA
SCL
SW_RX
SW_TX
100n
C9
328P
1k
R28
680
R50
CLEAR
GRN
BLU
RED
STATUS_LED2
IC5
VDD
VREF
AGND
CLK
DOUT
DIN
/CS
GND
CH0
CH1
CH2
CH3
CH4
CH5
CH6
CH7
MCP3008
R22
R23
R24
R25
R26
R27
JP1
JP2
JP3
JP4
JP5
JP6
JP7
JP8
JP9
JP10
JP11
JP12
Programming header
CN3
GND
SW_RX
SW_RST
SW_TX
VCC
Simple Wires Module
allModules
26-May-20 13:02
Sheet: 5/7

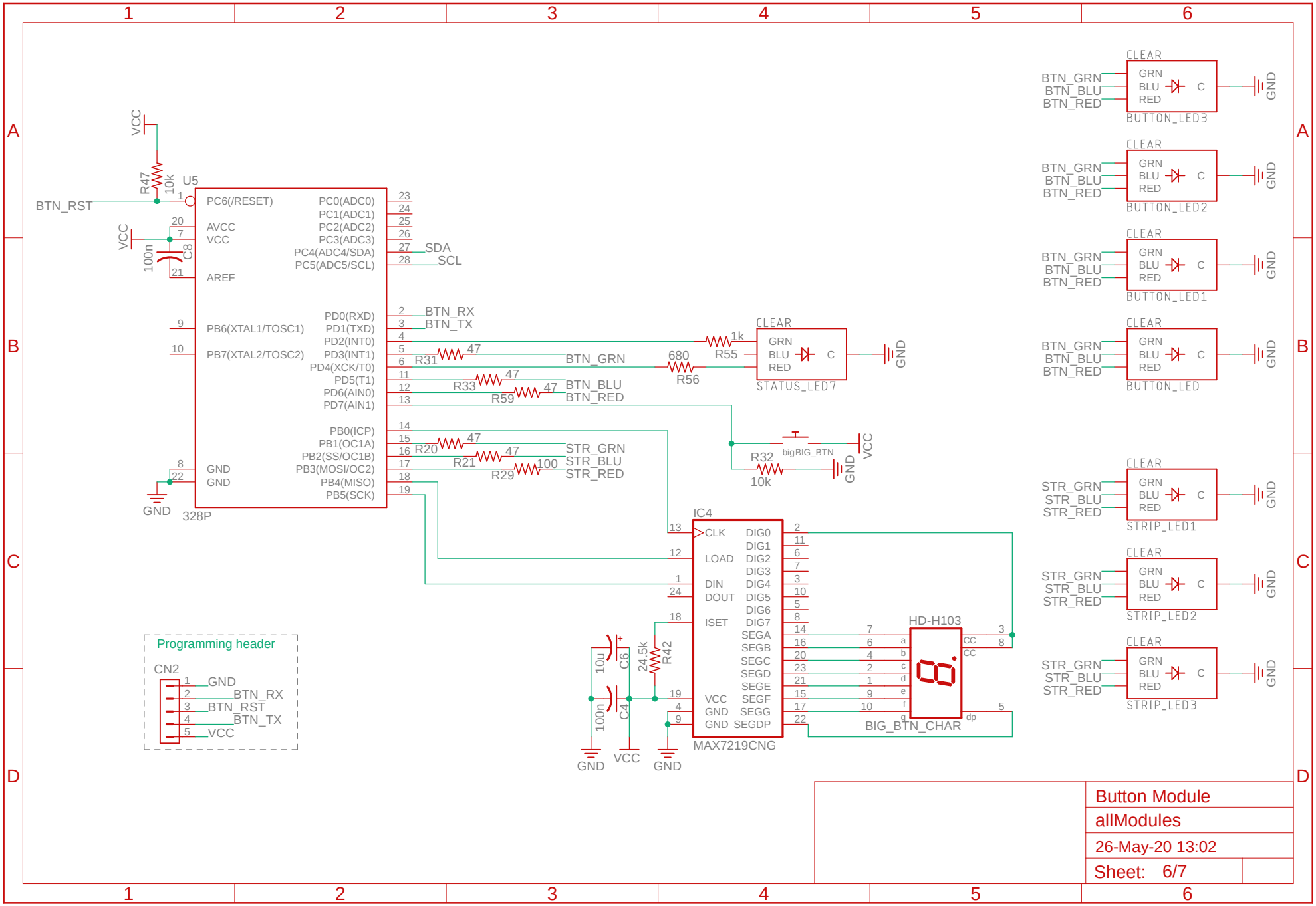

Button Module	
allModules	
26-May-20 13:02	
Sheet: 6/7	

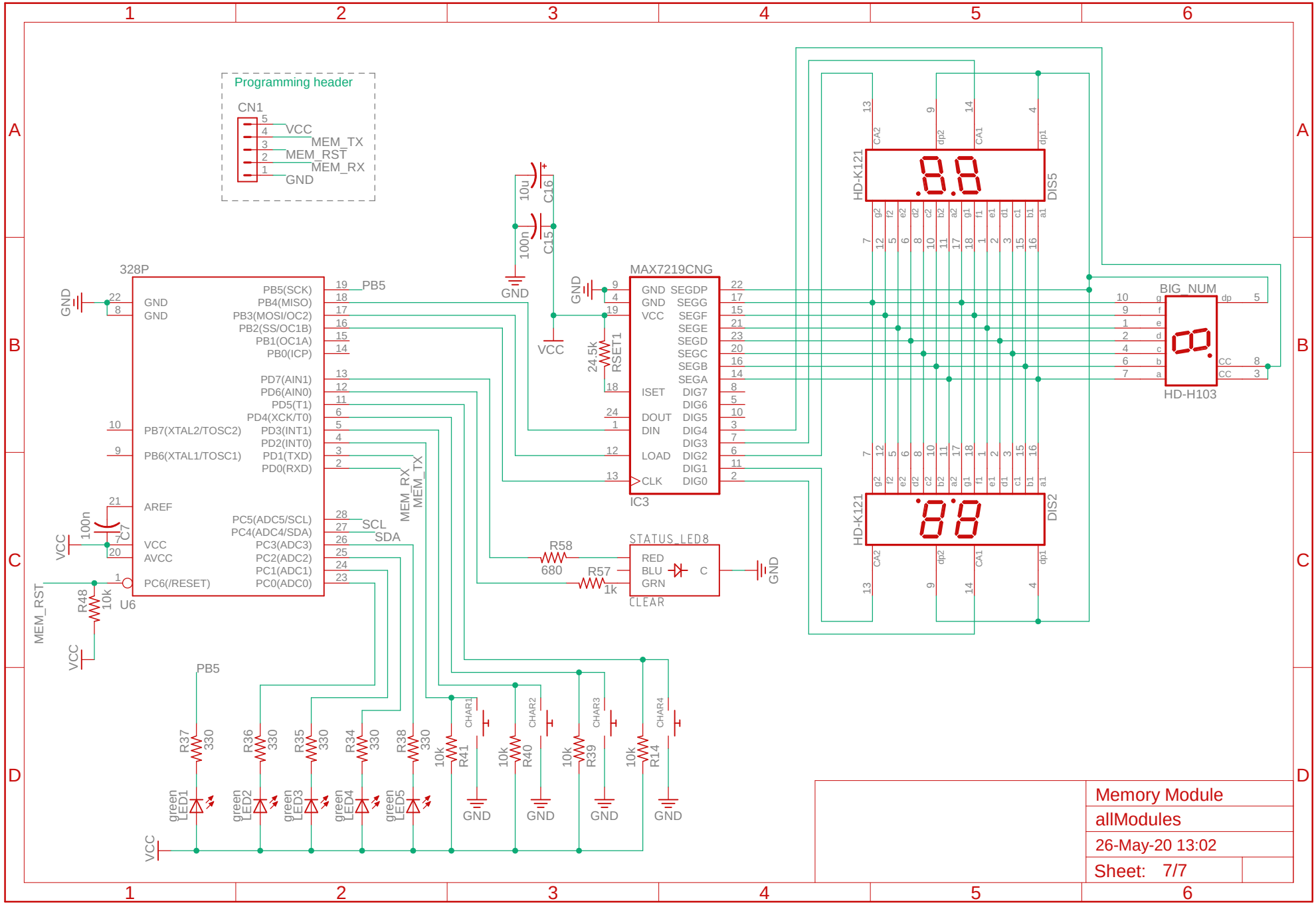
Programming header
CN1
VCC
MEM_TX
MEM_RST
MEM_RX
GND
328P
MAX7219CNG
IC3
HD-K121
DIS5
DIS2
BIG_NUM
HD-H103
STATUS_LED8
CLEAR
U6
C16
C15
C7
RSET1
R58
R57
R48
R37
R36
R35
R34
R38
R41
R40
R39
R14
CHAR1
CHAR2
CHAR3
CHAR4
green LED1
green LED2
green LED3
green LED4
green LED5
Memory Module
allModules
26-May-20 13:02
Sheet: 7/7