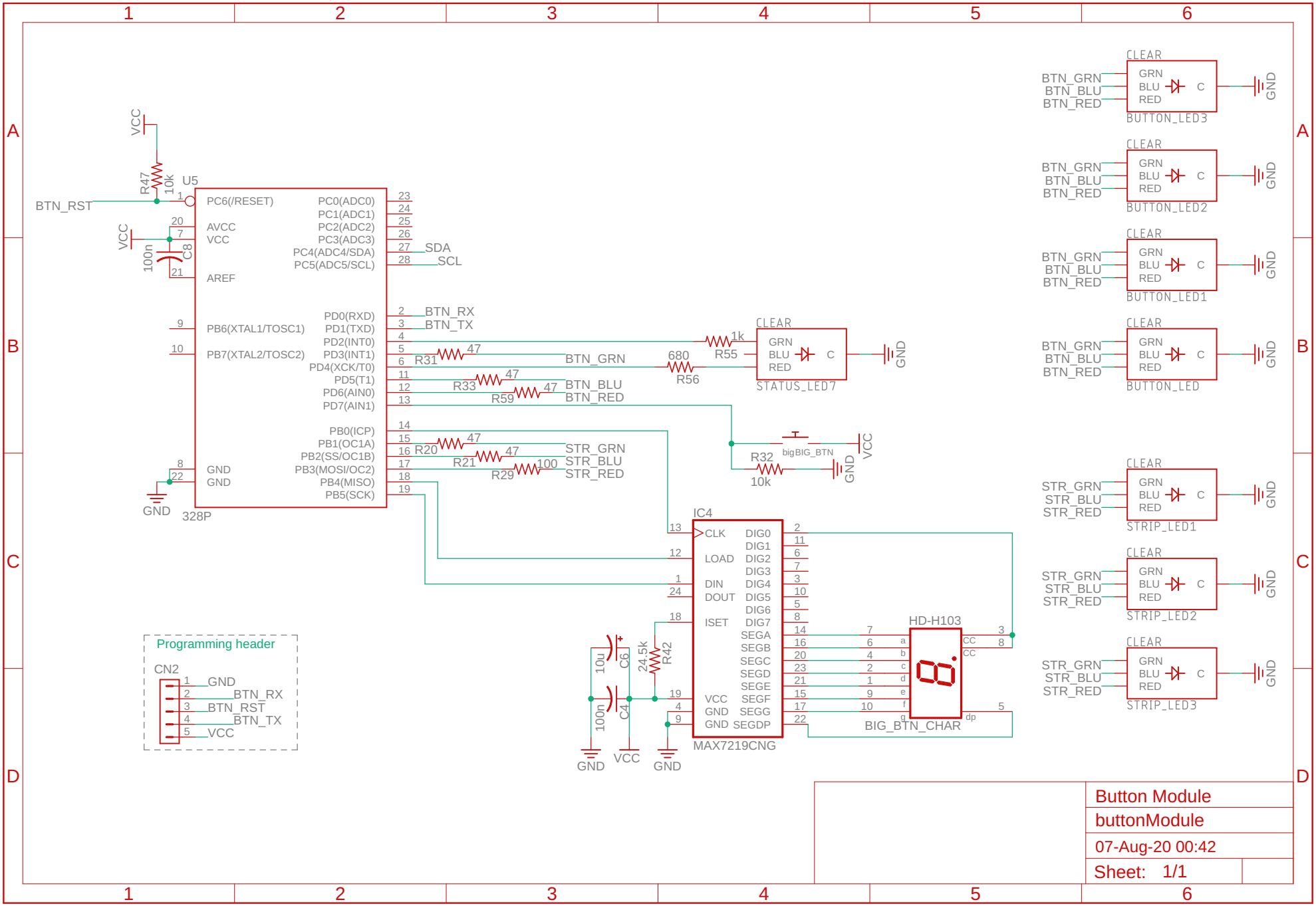
U5
328P
PC6(/RESET)
AVCC
VCC
AREF
PB6(XTAL1/TOSC1)
PB7(XTAL2/TOSC2)
GND
GND
PC0(ADC0)
PC1(ADC1)
PC2(ADC2)
PC3(ADC3)
PC4(ADC4/SDA)
PC5(ADC5/SCL)
PD0(RXD)
PD1(TXD)
PD2(INT0)
PD3(INT1)
PD4(XCK/T0)
PD5(T1)
PD6(AIN0)
PD7(AIN1)
PB0(ICP)
PB1(OC1A)
PB2(SS/OC1B)
PB3(MOSI/OC2)
PB4(MISO)
PB5(SCK)
BTN_RST
R47
10k
C8
100n
SDA
SCL
BTN_RX
BTN_TX
R31
47
BTN_GRN
R33
47
R59
47
BTN_BLU
BTN_RED
R20
47
R21
47
R29
100
STR_GRN
STR_BLU
STR_RED
R55
1k
R56
680
STATUS_LED7
R32
10k
bigBIG_BTN
IC4
MAX7219CNG
CLK
LOAD
DIN
DOUT
ISET
VCC
GND
GND
DIG0
DIG1
DIG2
DIG3
DIG4
DIG5
DIG6
DIG7
SEGA
SEGB
SEGC
SEGD
SEGE
SEGF
SEGG
SEGDP
C6
10u
C4
100n
R42
24.5k
HD-H103
BIG_BTN_CHAR
Programming header
CN2
GND
BTN_RX
BTN_RST
BTN_TX
VCC
CLEAR
GRN
BLU
RED
C
BUTTON_LED3
BUTTON_LED2
BUTTON_LED1
BUTTON_LED
STATUS_LED7
STRIP_LED1
STRIP_LED2
STRIP_LED3
Button Module
buttonModule
07-Aug-20 00:42
Sheet: 1/1