Data Sheet iSYS-4001 (RS232) iSYS-4002 (RS485)

Version 2.8 - 20.07.2020

PRODUCT FAMILY

K-Band Movement Detection System

- Movement
- Velocity
- Direction
- Presence
- Distance
- Angle

APPLICATIONS

- Industrial Applications
- Energy Saving
- Traffic Monitoring
- Lighting Control
- Security Applications

FEATURES:

» radar-based motion detector working in the 24GHz - ISM - Band
» Detection of moving objects in a distance from 0.3 to 150m (depending on RCS of detected object)
» Detection range configurable
» Detectable speed: ±0.8km/h up to ±250 km/h
» Direction of motion discrimination
» Protection class IP67 for outdoor use
» Robust metal housing

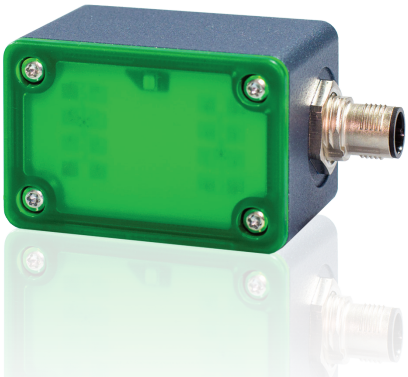

DESCRIPTION

K-Band based motion detector with intelligent µC decision unit. It can detect moving objects in a speed range of 0.8 km/h (0.48 mph) up to 250 km/h (155.32 mph). The detection range is from 0.3m (1ft) up to 150m (492.5ft) (depending on RCS of moving object). The sensor provides 3 programmable output pins that offers a wide area of individual configurations, to be sure that the sensor fits to your individual requirements. The programming can be easily done by an GUI, that is available under www.innosent.de.

CERTIFICATES

InnoSenT GmbH has established and applies a quality system for: development, production and sales of radar sensors for industrial and automotive sensors. More information on our quality standards:

https://www.innosent.de/en/company/certifications/

ADDITIONAL INFORMATION

InnoSenT Standard Product. Changes will not be notified as long as there is no influence on form, fit and within this data sheet specified function of the product.

RoHS-INFO

This product is compliant to the restriction of hazardous substances (RoHS - European Union directive 2011/65/EU).

CONFIDENTIAL AND PROPRIETARY
The information contained in this document shall remain the sole and exclusive property of InnoSenT GmbH and shall not be disclosed by the recipient to third parties without prior consent of InnoSenT in writing.

PARAMETERS

The iSYS-4001 consist of a 24GHz Radarfrontend (RFE) with DSP-Board for measuring of distance and radial velocity of objects. The sensor offers 3 outputs that can be configured within the specified ranges:

speed area:	0.8....250km/h	(radial velocity of detected object)
distance area:	0.3....150m	(reachable distance depending on RCS of detected object)

The communication is be done by RS232 interface for iSYS-4001 and RS485 for iSYS-4002. Three output signals are available as PWM or as digital output (open drain). The configuration of the sensor can be done by a GUI (Graphical User Interface).

PARAMETER	CONDITIONS	SYMBOL	MIN	TYP	MAX	UNITS
Radar						
transmit frequencies	channel 1 (EU)	f_1		24.190		GHz
	channel 2 (EU)	f_2		24.210		GHz
	channel 3 (US)	f_3		24.115		GHz
	channel 4 (US)	f_4		24.135		GHz
	channel 5 (EU) available from firmware v1.310	f_5		24.195		GHz
	channel 6 (EU) available from firmware v1.310	f_6		24.215		GHz
	channel 7 (US) available from firmware v1.310	f_7		24.120		GHz
	channel 8 (US) available from firmware v1.310	f_8		24.140		GHz
output power (EIRP)	@ 25°C	P_{out}			20	dBm
Sensor						
detection distance	depending on RCS of detected object	d_r			150	m
speed range		v_r	0.8		250	km/h
standard detection field	compare with plot on page 3	horizontal		34		°
		vertical		49		°
Power supply						
supply voltage		V_{CC}	10		30	V
supply current	@ 12V without digital out current	I_{CC_12V}		135	150	mA
supply current	@ 24V without digital out current	I_{CC_24V}		76	85	mA
Digital Output Current						
OUT1	open drain	I_{Out}			-400	mA
OUT2	open drain	I_{Out}			-400	mA
OUT3	open drain	I_{Out}			-400	mA
digital total current		I_{Out}			-800	mA
Environment						
operating temperature		T_{OP}	-25		+60	°C
storage temperature		T_{STG}	-25		+60	°C
Mechanical Outlines						
outline dimensions	compare to schematic on page 4	height length width		43.4 75.6 40.0		mm

CONFIDENTIAL AND PROPRIETARY

The information contained in this document shall remain the sole and exclusive property of InnoSenT GmbH and shall not be disclosed by the recipient to third parties without prior consent of InnoSenT in writing.

DETECTION FIELDS

Something about detection fields: Providing the width of the antenna in degrees just says, that the transmitted or received energy has dropped at this point down to 50 percent of the maximum value (3dB-beamwidth). It does definitely not mean that beyond that point no transmission or reception is possible anymore. An object for instance with huge radar cross section (truck, metallic door) might very well compensate the loss of the antenna pattern and provide a significant radar signal. Due to this fact the detection range of the sensor can vary depending on the RCS (radar cross section) of the detected object. The shown schematics below are theoretical detection fields for a person (typ. RCS 0.5 - 1 m^2 @24GHz) walking towards the sensor and should only be a guidance for first installations.

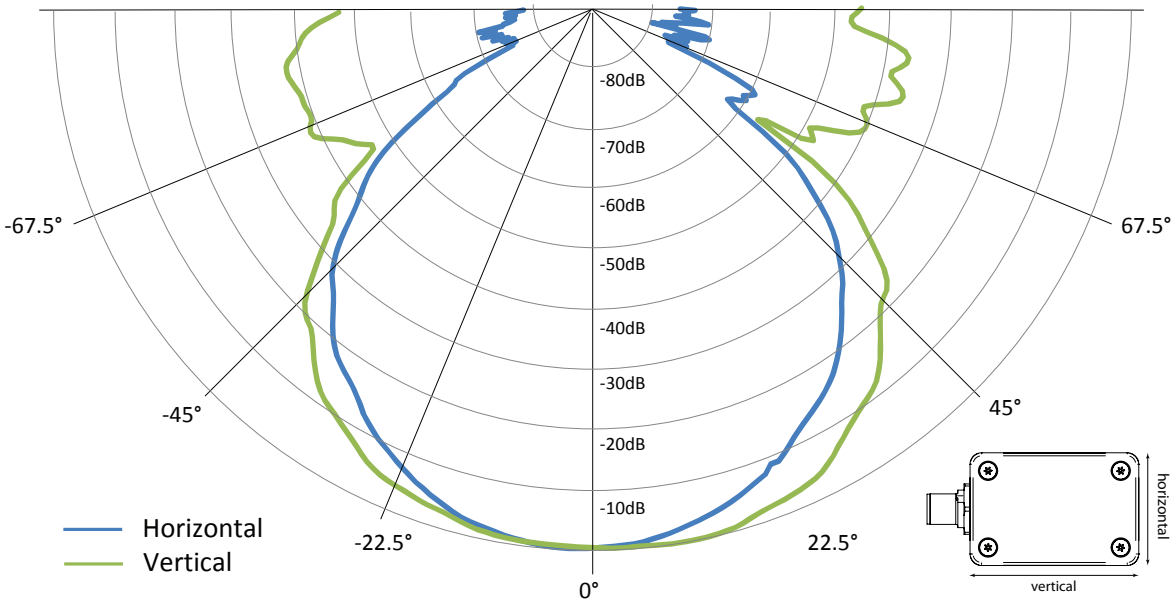

iSYS-4001 system-pattern (measured)

INTERFACE iSYS-4001 (RS232)

The sensor provides an M12x8 Conec type SAL - 12 - FSH8 - P5,5 - 9 (PN: 43-01071) with SAL - 12 - FKH8 - P5,5 - 9 PLUG (PN: 43-01063).

PIN #	DESCRIPTION	IN / OUT	COMMENT
1	OUT1	output	open drain
2	OUT2	output	open drain
3	OUT3	output	open drain
4	Boot Mode	input	do not connect in operation
5	VCC	input	supply voltage (DC 10...30V)
6	GND		
7	RS232_Rx	input	
8	RS232_Tx	output	

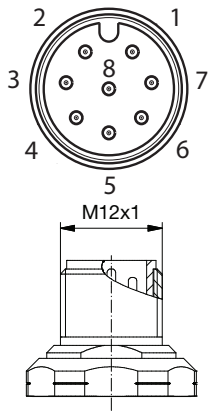

CONFIDENTIAL AND PROPRIETARY
The information contained in this document shall remain the sole and exclusive property of InnoSenT GmbH and shall not be disclosed by the recipient to third parties without prior consent of InnoSenT in writing.

INTERFACE iSYS-4002 (RS485)

The sensor provides an M12x8 Conec type SAL - 12 - FSH8 - P5,5 - 9 (PN: 43-01071) with SAL - 12 - FKH8 - P5,5 - 9 PLUG (PN: 43-01063).

PIN #	DESCRIPTION	IN / OUT	COMMENT
1	OUT1	output	open drain
2	OUT2	output	open drain
3	OUT3	output	open drain
4	Boot Mode	input	do not connect in operation
5	VCC	input	supply voltage (DC 10...30V)
6	GND		
7	RS485_A	in/output	
8	RS485_B	in/output	

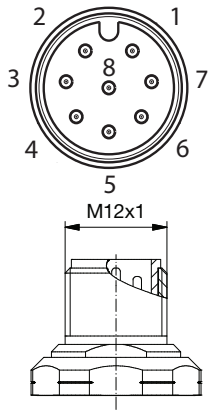

MECHANICAL OUTLINES

For mounting the module we recommend to use standard M4 screws.

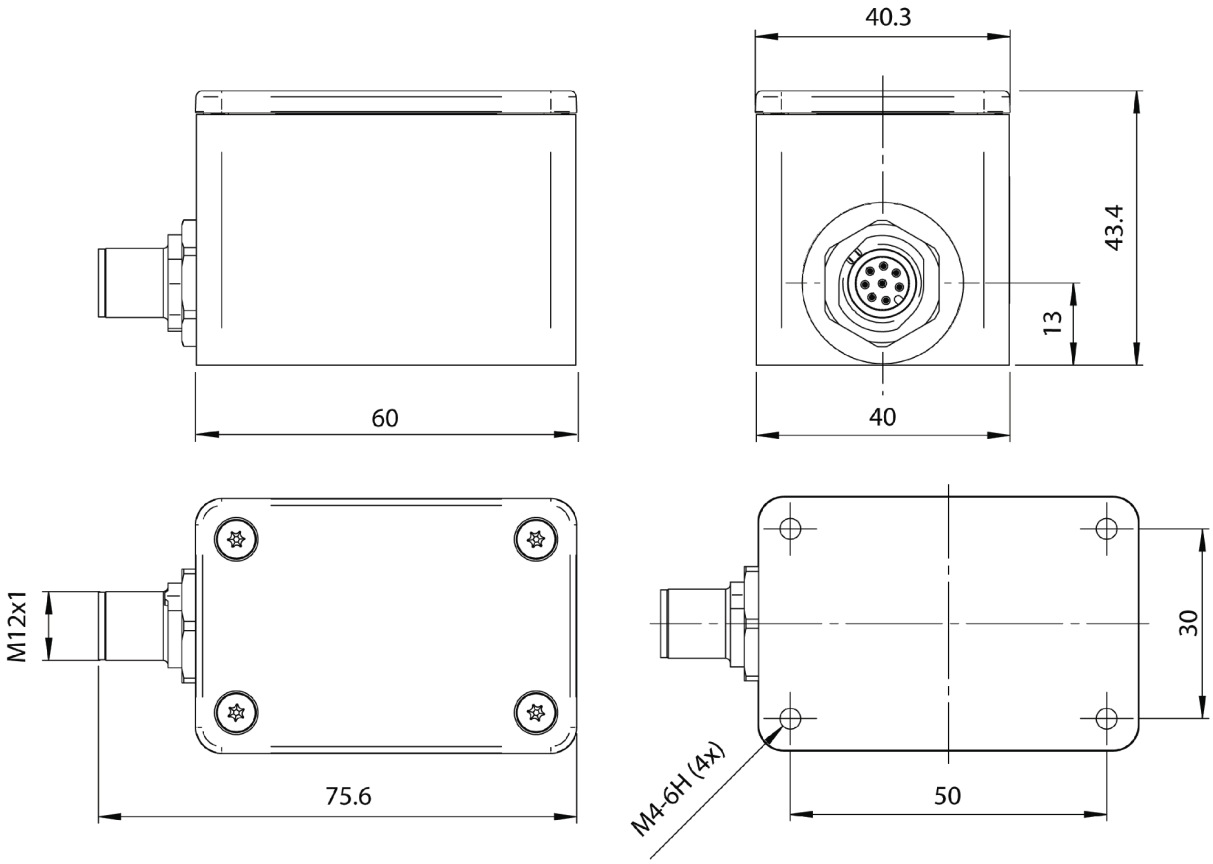

CONFIDENTIAL AND PROPRIETARY
The information contained in this document shall remain the sole and exclusive property of InnoSenT GmbH and shall not be disclosed by the recipient to third parties without prior consent of InnoSenT in writing.

START-UP SEQUENCE

The integrated LED indicates the status of the sensor on power up.

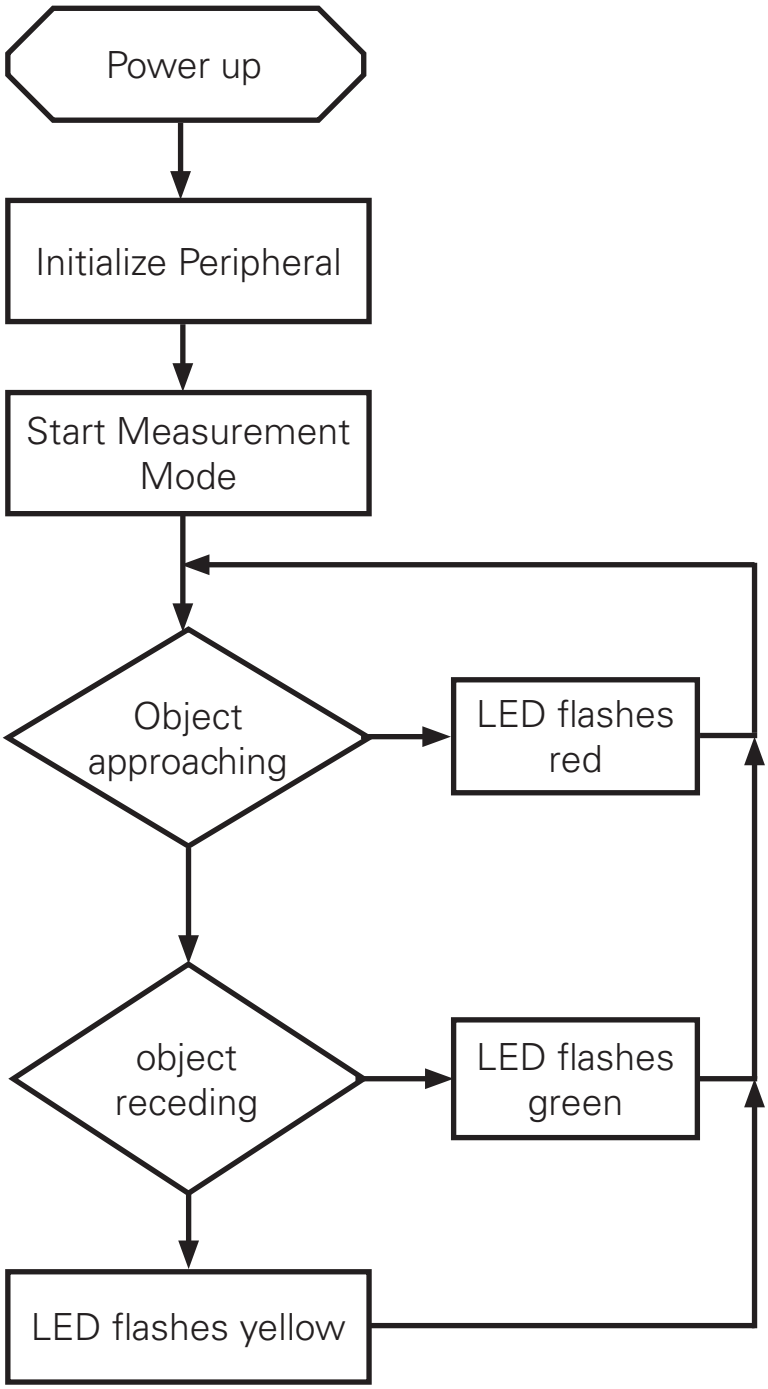

CONFIDENTIAL AND PROPRIETARY
The information contained in this document shall remain the sole and exclusive property of InnoSenT GmbH and shall not be disclosed by the recipient to third parties without prior consent of InnoSenT in writing.

QUICK-START-GUIDE

For an easy start with the iSYS-4001 a quick-start-guide is available at www.InnoSenT.de

GUI - Graphical User Interface

The iSYS-4001 can be configured by using the corresponding GUI. The actual Software can be downloaded under www.InnoSenT.de.

APPROVAL

This Data Sheet contains the technical specifications of the described product. Changes of the specification must be in written form. All previous versions of this Data Sheet are no longer valid.

VERSION	DATE	COMMENT
1.0	08.11.2013	initial release
1.1	22.03.2013	changes in mechanical outlines
2.0	04.06.2013	changes in frequency channels and maximum detection distance
2.1	21.08.2013	minor changes
2.2	19.11.2013	iSYS-4002 specification included
2.3	14.07.2014	changes in RoHS-Info
2.4	06.10.2014	changes in supply current
2.5	12.03.2015	changes in digital current
2.6	29.06.2016	outputs changed to open drain
2.7	19.07.2016	adding new transmit frequencies channels
2.8	20.07.2020	new layout

InnoSenT GmbH

Am Rödertor 30
97499 Donnersdorf
GERMANY

Tel.: +49 (0)9528 - 9518 - 0
E-Mail: info@InnoSenT.de
URL: www.InnoSenT.de