PassMan – BLOCK DIAGRAM

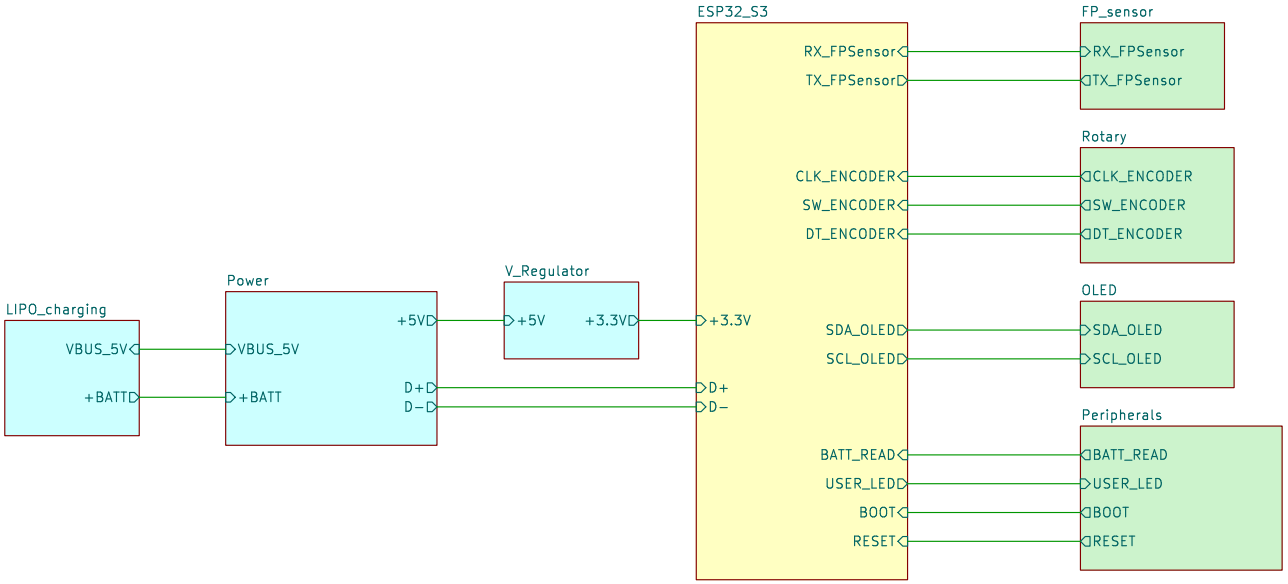

Sheet: /
File: Passman.kicad_sch

Title: PassMan – BLOCK DIAGRAM

Size: A4	Date: 2025-09-18	**Rev: V2.1**
KiCad E.D.A. 9.0.1		Id: 1/9

EPS32 S3 WROOM 1

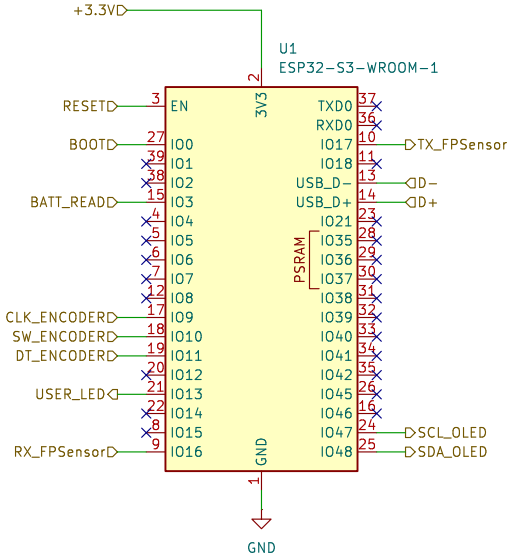

Decoupling Caps

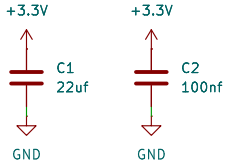

Sheet: /ESP32_S3/
File: esp32.kicad_sch

Title: EPS32 S3 WROOM 1

Size: A5	Date: 2025-09-18	**Rev: V2.1**
KiCad E.D.A. 9.0.1		Id: 2/9

USB-C

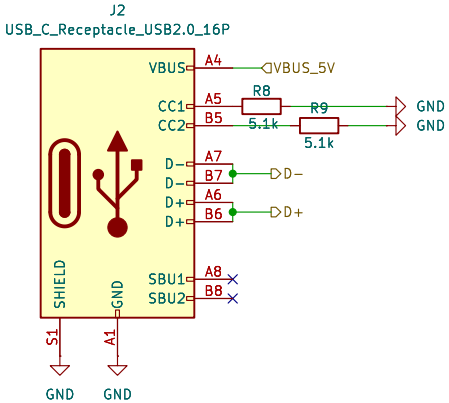

Power Management & switch

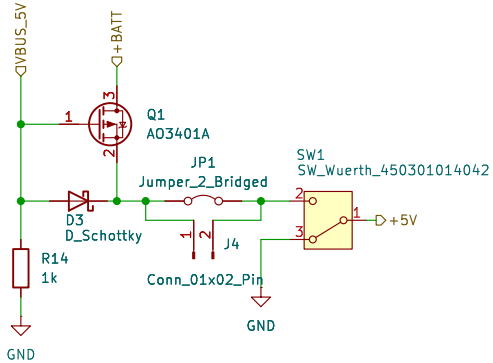

LED Power Indicator

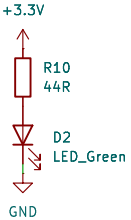

Connectors

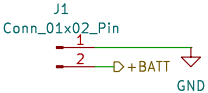

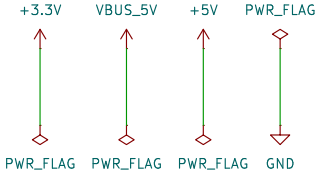

Sheet: /Power/
File: power.kicad_sch

Title: Passman – Power

Size: A5	Date: 2025-09-18	**Rev: V2.1**
KiCad E.D.A. 9.0.1		Id: 3/9

User LED

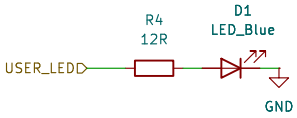

Battery read

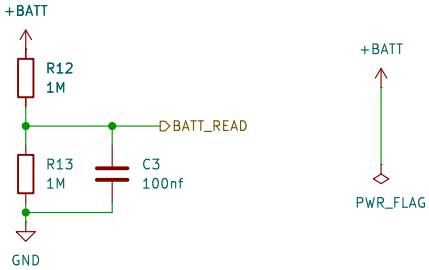

Reset button

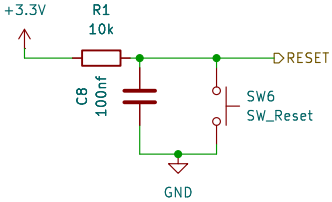

Boot button

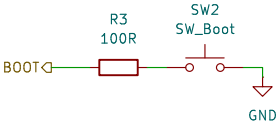

Sheet: /Peripherals/ File: peripherals.kicad_sch		
Title: Passman – Peripherals		
Size: A5	Date: 2025-09-18	**Rev: V2.1**
KiCad E.D.A. 9.0.1		Id: 4/9

Switching voltage regulator

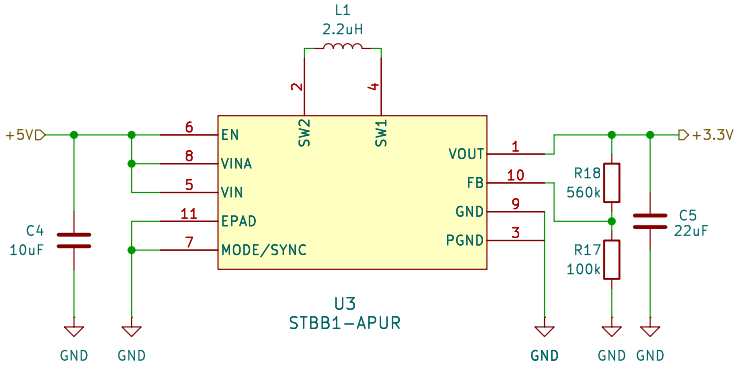

Sheet: /V_Regulator/ File: V_regulator.kicad_sch		
Title: Voltage Regulator		
Size: A5	Date: 2025-09-18	**Rev: V2.1**
KiCad E.D.A. 9.0.1		Id: 5/9

LIPO Charging

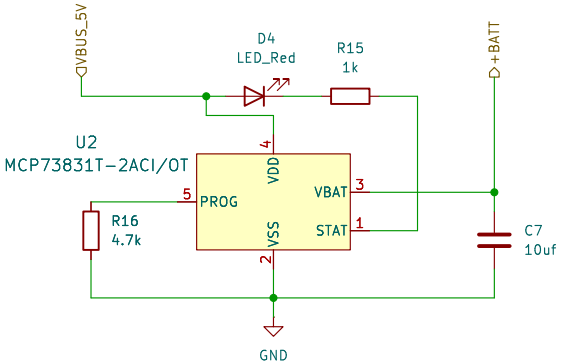

Sheet: /LIPO_charging/ File: LIPO_charging.kicad_sch		
Title: LIPO Charging		
Size: A5	Date: 2025-09-18	**Rev: V2.1**
KiCad E.D.A. 9.0.1		Id: 6/9

Rotary Encoder

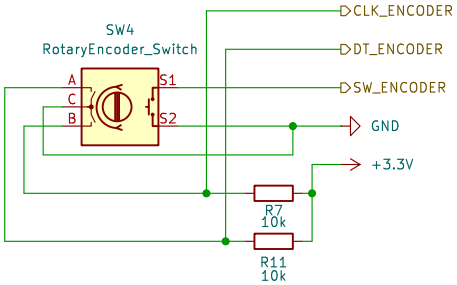

Sheet: /Rotary/
File: roatry.kicad_sch

Title: Rotary encoder

Size: A5	Date: 2025-09-18	**Rev: V2.1**
KiCad E.D.A. 9.0.1		Id: 7/9

OLED Display

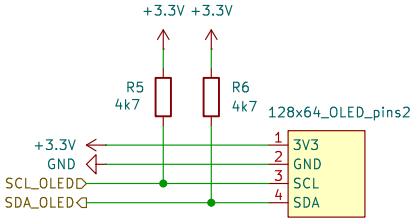

Sheet: /OLED/		
File: OLED.kicad_sch		
Title: OLED Display		
Size: A5	Date: 2025-09-18	**Rev: V2.1**
KiCad E.D.A. 9.0.1		Id: 8/9

Fingerprint Sensor

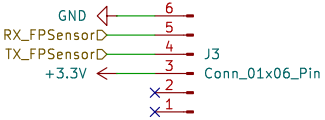

Sheet: /FP_sensor/ File: FP_sensor.kicad_sch		
Title: Fingerprint Sensor		
Size: A5	Date: 2025-09-18	**Rev: V2.1**
KiCad E.D.A. 9.0.1		Id: 9/9