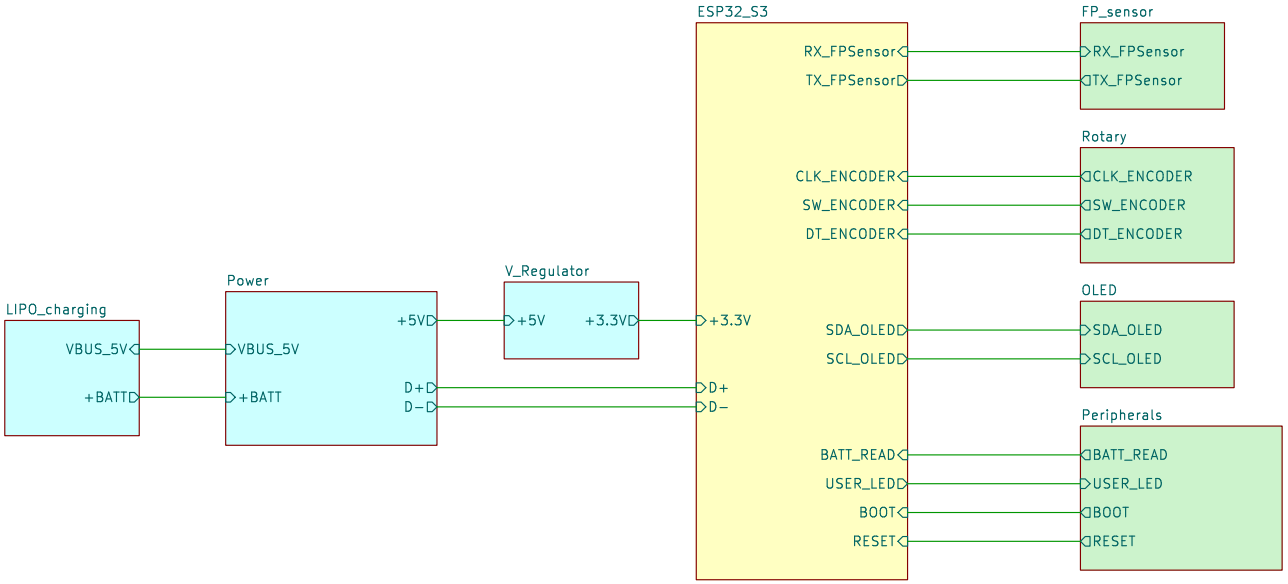

Sheet: /
File: Passman.kicad_sch

Title: PassMan – BLOCK DIAGRAM

Size: A4	Date: 2025-09-18	**Rev: V2.1**
KiCad E.D.A. 9.0.1		Id: 1/9

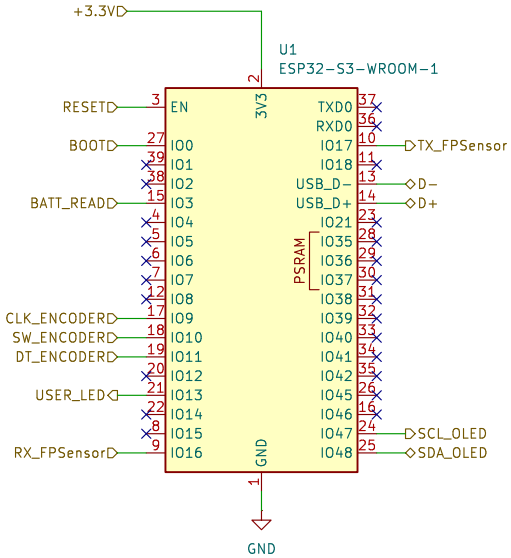

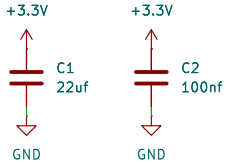

Sheet: /ESP32_S3/
File: esp32.kicad_sch

Title: EPS32 S3 WROOM 1

Size: A5	Date: 2025-09-18	**Rev: V2.1**
KiCad E.D.A. 9.0.1		Id: 2/9

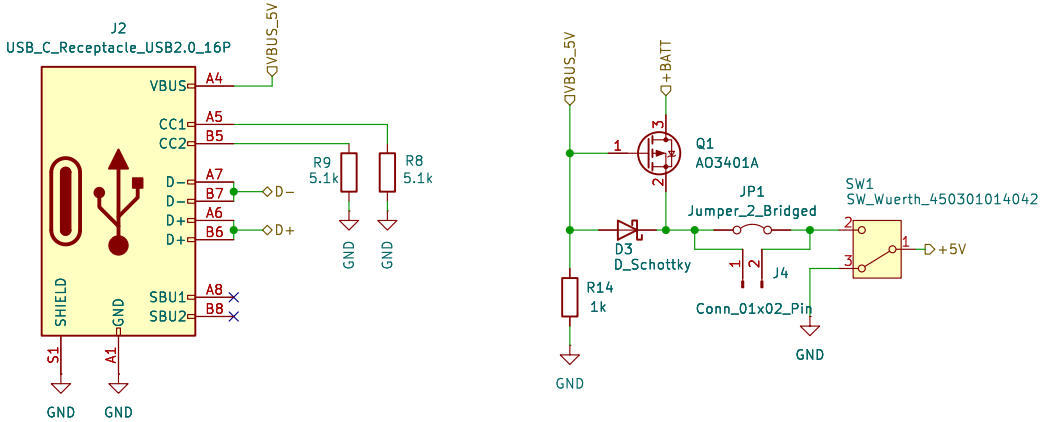

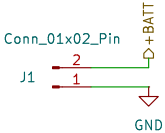

LED Power Indicator

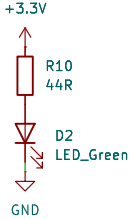

Sheet: /Power/
File: power.kicad_sch

Title: Passman – Power

Size: A5	Date: 2025-09-18	Rev: V2.1
KiCad E.D.A. 9.0.1		Id: 3/9

User LED

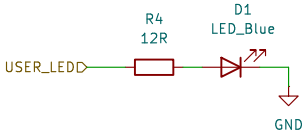

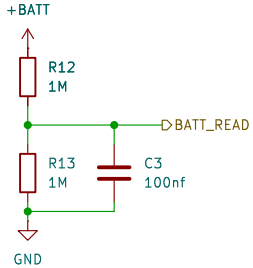

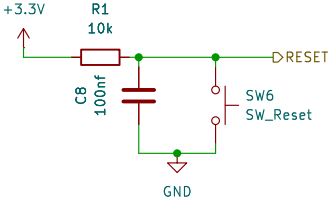

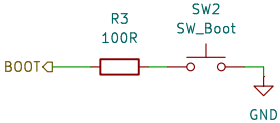

Sheet: /Peripherals/ File: peripherals.kicad_sch		
Title: Passman – Peripherals		
Size: A5	Date: 2025-09-18	**Rev: V2.1**
KiCad E.D.A. 9.0.1		Id: 4/9

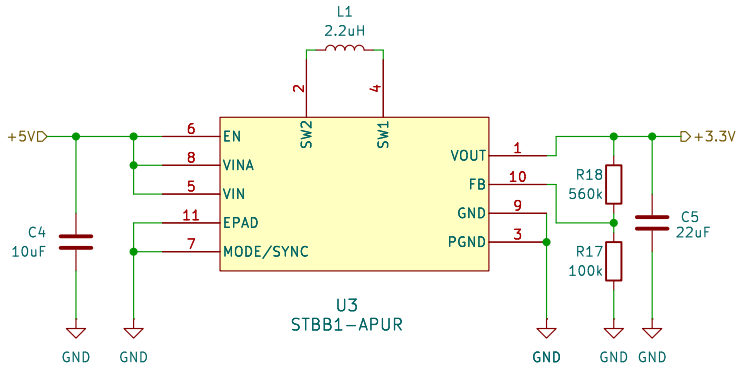

Sheet: /V_Regulator/
File: V_regulator.kicad_sch

Title: Voltage Regulator

Size: A5	Date: 2025-09-18	**Rev: V2.1**
KiCad E.D.A. 9.0.1		Id: 5/9

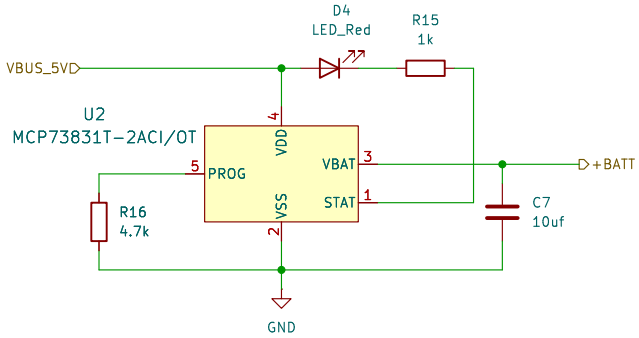

Sheet: /LIPO_charging/
File: LIPO_charging.kicad_sch

Title: LIPO Charging

Size: A5	Date: 2025-09-18	**Rev: V2.1**
KiCad E.D.A. 9.0.1		Id: 6/9

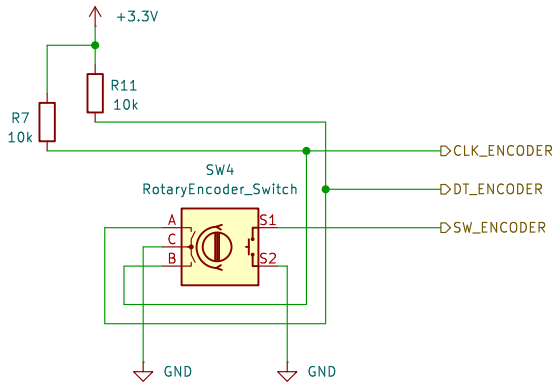

Sheet: /Rotary/
File: roatry.kicad_sch

Title: Rotary encoder

Size: A5	Date: 2025-09-18	**Rev: V2.1**
KiCad E.D.A. 9.0.1		Id: 7/9

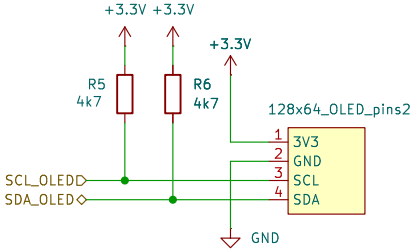

Sheet: /OLED/
File: OLED.kicad_sch

Title: OLED Display

Size: A5	Date: 2025-09-18	**Rev: V2.1**
KiCad E.D.A. 9.0.1		Id: 8/9

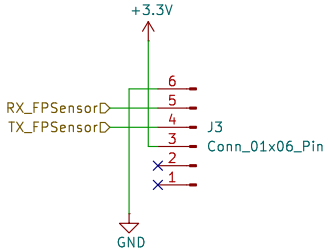

Sheet: /FP_sensor/
File: FP_sensor.kicad_sch

Title: Fingerprint Sensor

Size: A5	Date: 2025-09-18	**Rev: V2.1**
KiCad E.D.A. 9.0.1		Id: 9/9