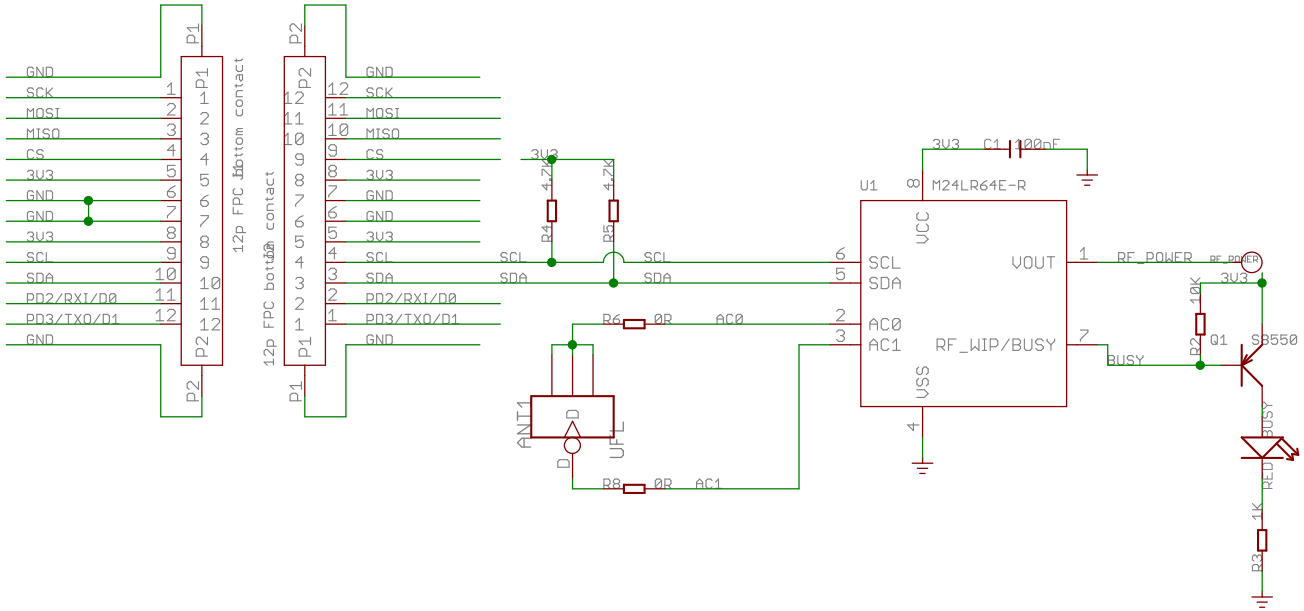


# SeeedStudio

TITLE: Xadow - NFC Tag v1.0

| | | |
|---|---|---|
| Design: Wangcf | Check: Bruce | |
| Date: 4/11/2014 1:00:43 PM | Vision: v1.0 | Sheet: 1/2 |