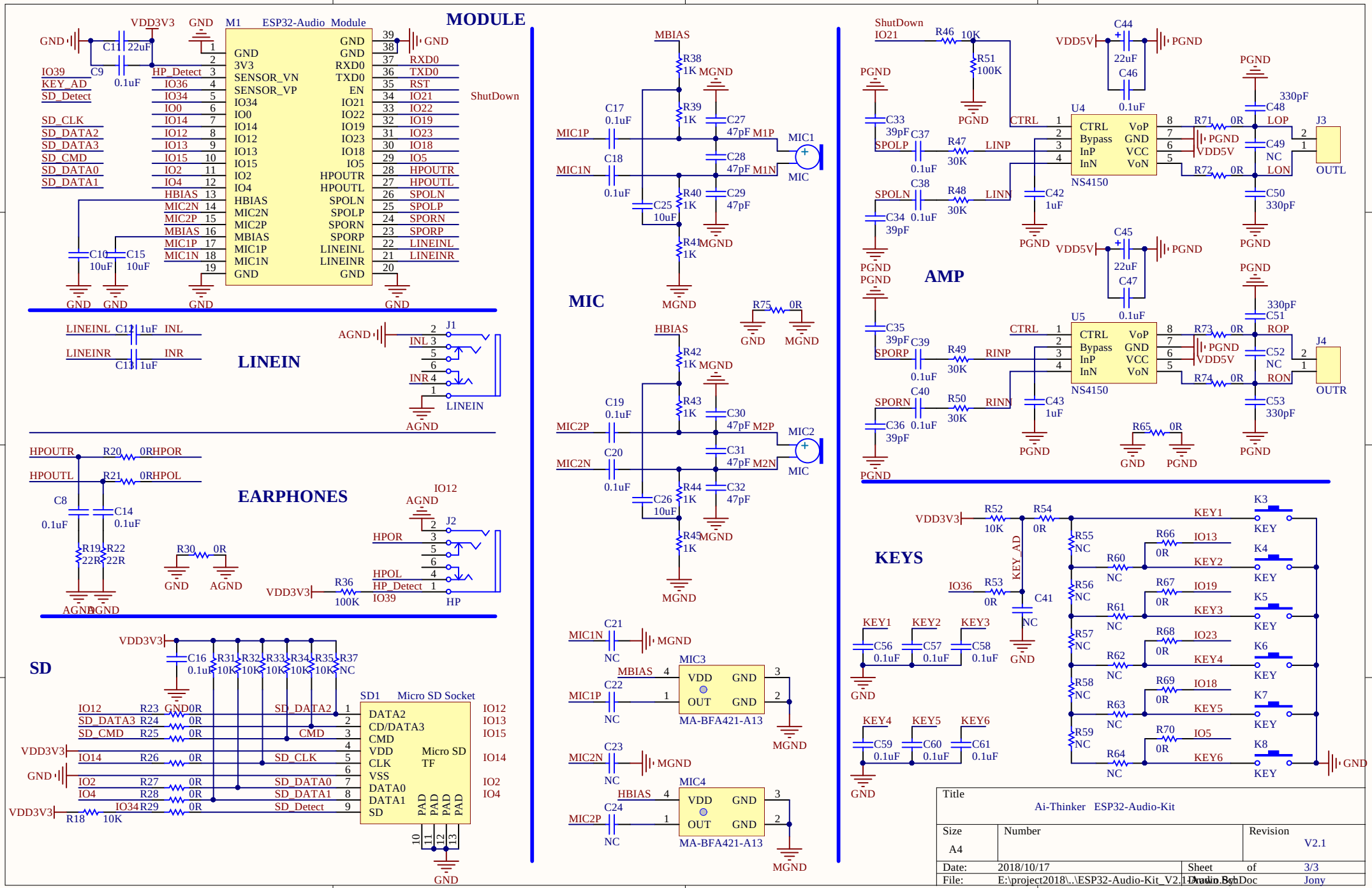
MODULE
M1 ESP32-Audio Module
GND
3V3
SENSOR_VN
SENSOR_VP
IO34
IO0
IO14
IO12
IO13
IO15
IO2
IO4
HBIAS
MIC2N
MIC2P
MBIAS
MIC1P
MIC1N
RXD0
TXD0
EN
IO21
IO22
IO19
IO23
IO18
IO5
HPOUTR
HPOUTL
SPOLN
SPOLP
SPORN
SPORP
LINEINL
LINEINR
VDD3V3
IO39
KEY_AD
SD_Detect
HP_Detect
SD_CLK
SD_DATA2
SD_DATA3
SD_CMD
SD_DATA0
SD_DATA1
ShutDown
LINEIN
J1
INL
INR
AGND
EARPHONES
HPOUTR
HPOUTL
HPOR
HPOL
J2
HP
IO12
IO39
SD
SD1 Micro SD Socket
DATA2
CD/DATA3
CMD
VDD
CLK
VSS
DATA0
DATA1
SD
Micro SD TF
SD_DATA2
SD_DATA3
SD_CMD
SD_CLK
SD_DATA0
SD_DATA1
SD_Detect
MIC
MIC1
MIC2
MIC3
MIC4
MA-BFA421-A13
MBIAS
HBIAS
MGND
AMP
U4
U5
NS4150
CTRL
Bypass
InP
InN
VoP
VoN
VCC
VDD5V
PGND
LOP
LON
ROP
RON
J3
J4
OUTL
OUTR
KEYS
KEY1
KEY2
KEY3
KEY4
KEY5
KEY6
KEY_AD
Title
Ai-Thinker ESP32-Audio-Kit
Size
A4
Number
Revision
V2.1
Date: 2018/10/17
Sheet of 3/3
File: E:\project2018\..\ESP32-Audio-Kit_V2.1.PrjPcb
Drawn By: Jony