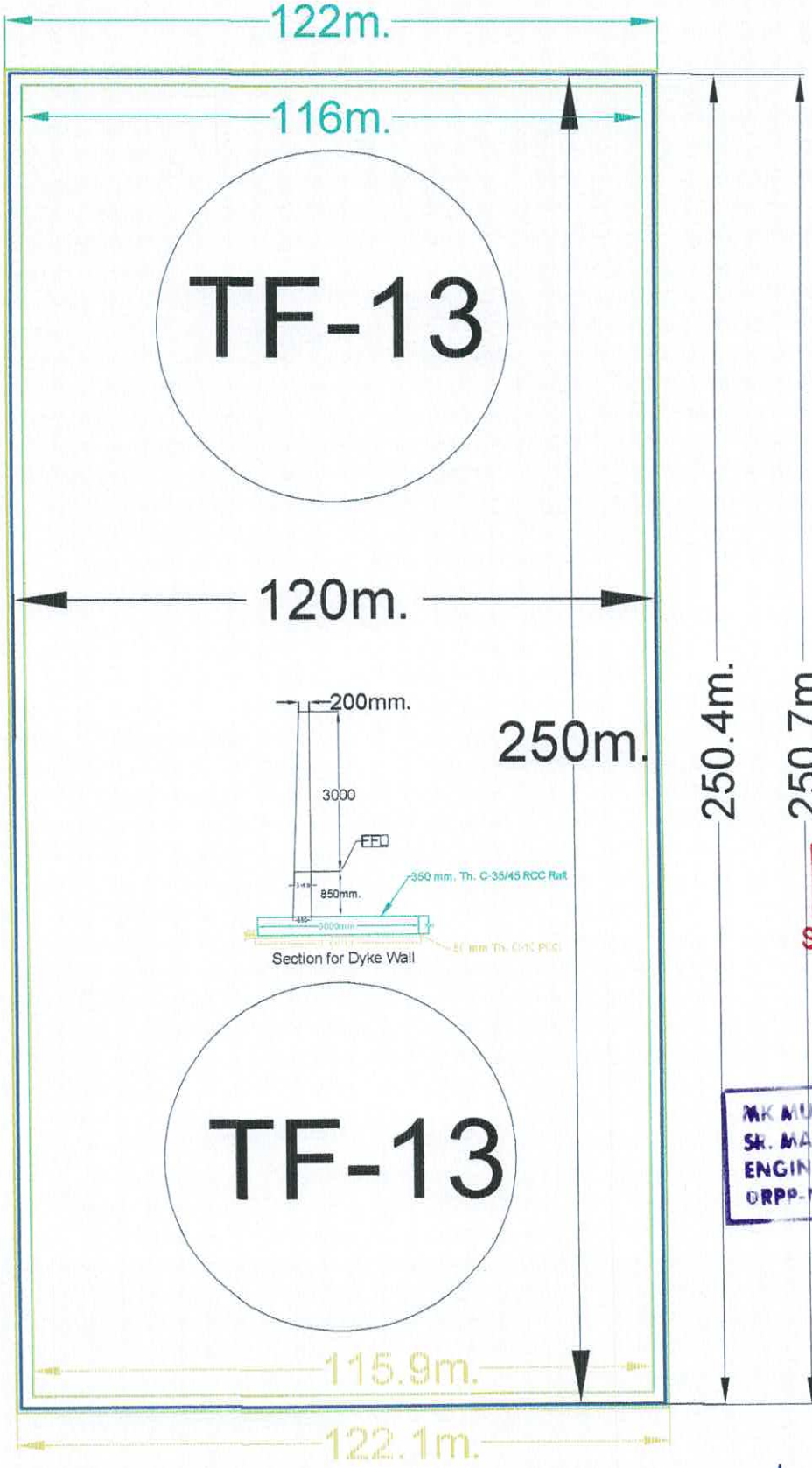

AS BUILT DRAWINGS
SHAPOORJI PALLONJI

MK MURUGAN
SR. MANAGER
ENGINEERS INDIA LTD.
ORPP-NIGERIA

PKKumelu
(SP)

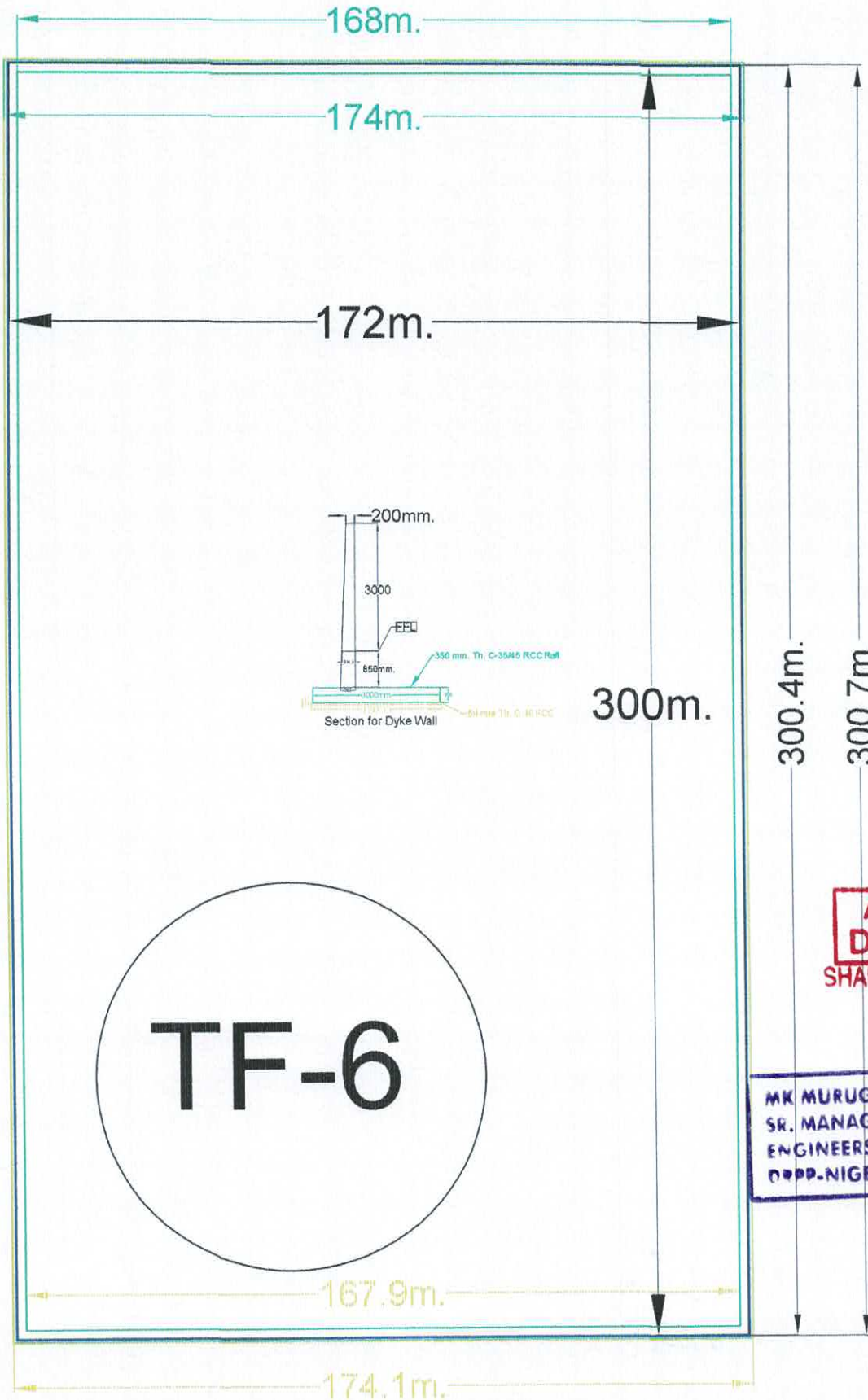

AS BUILT DRAWINGS
SHAPOORJI PALLONJ

MK MURUGAN
SR. MANAGER
ENGINEERS INDIA LTD.
DPPP-NIGERIA

PKKundu
(SP)

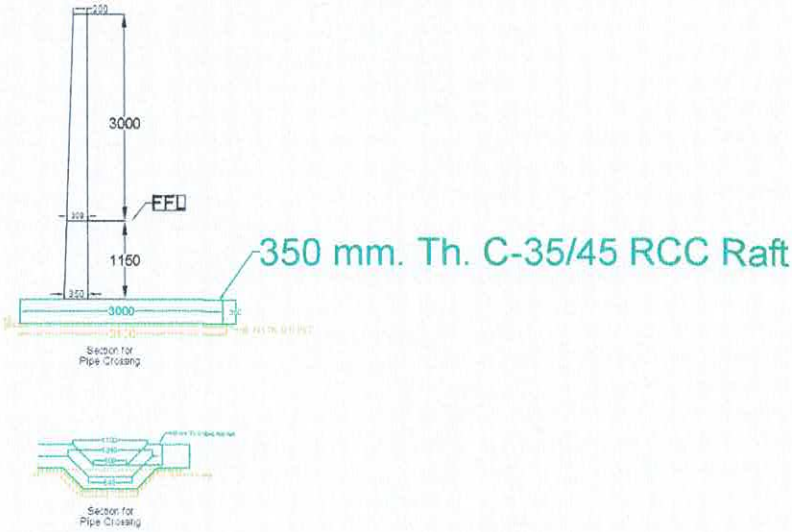

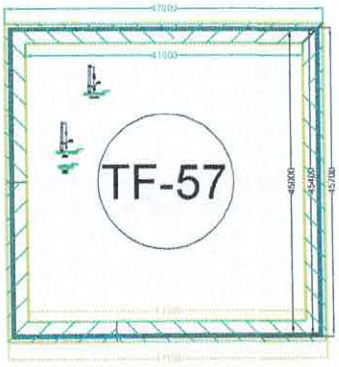

AS BUILT
DRAWINGS
SHAPOORJI PALLONJI

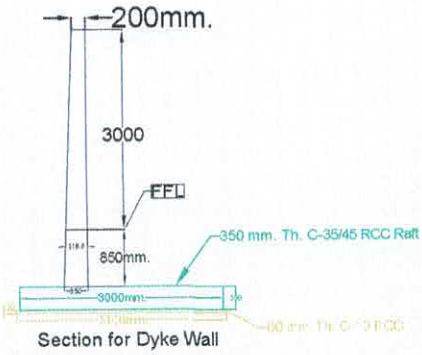

MK MURUGAN
SR. MANAGER
ENGINEERS INDIA LTD.
DRPP-NIGERIA

PKKundu
CSD