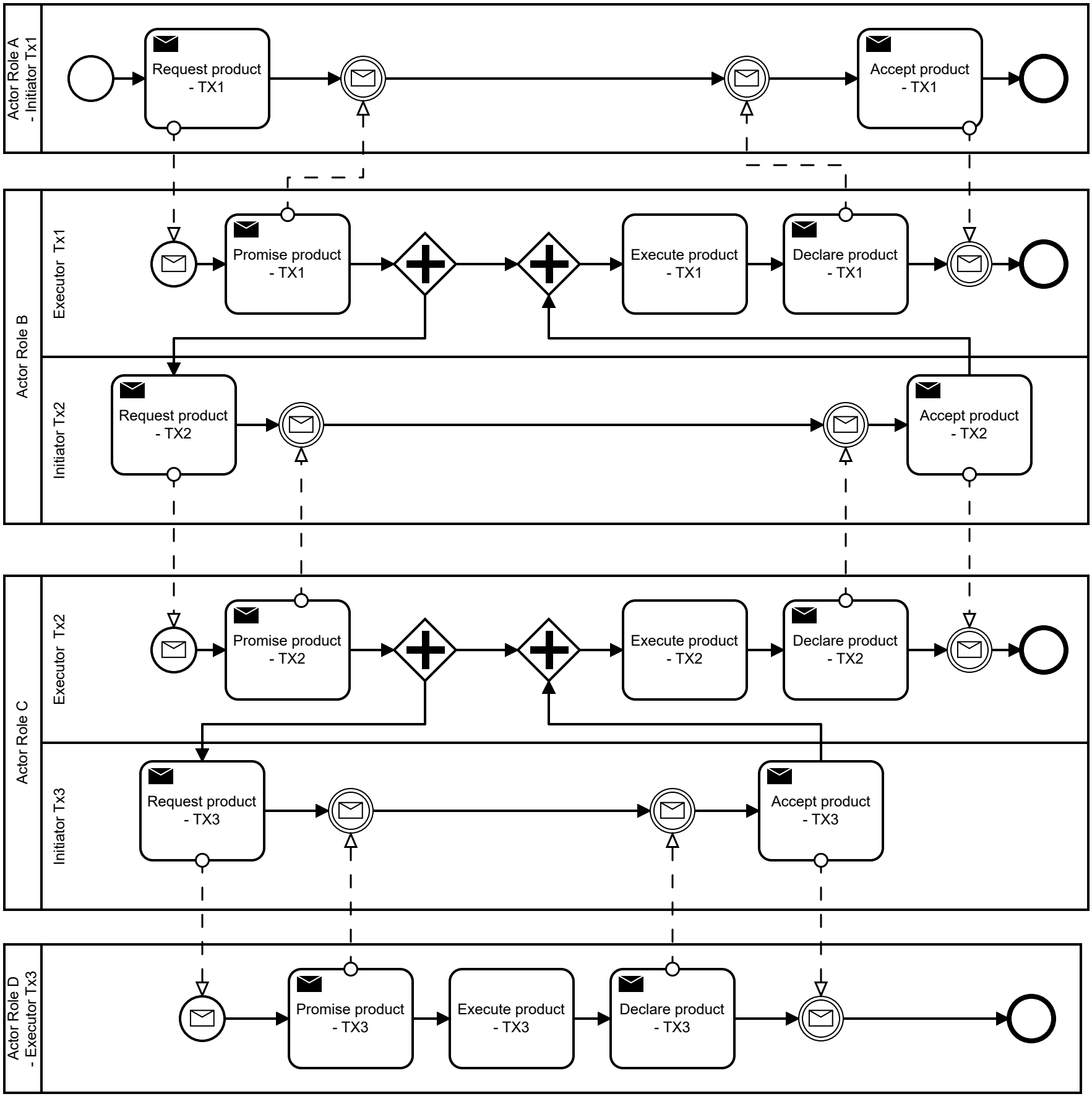
Actor Role A
- Initiator Tx1
Request product
- TX1
Accept product
- TX1
Actor Role B
Executor Tx1
Promise product
- TX1
Execute product
- TX1
Declare product
- TX1
Initiator Tx2
Request product
- TX2
Accept product
- TX2
Actor Role C
Executor Tx2
Promise product
- TX2
Execute product
- TX2
Declare product
- TX2
Initiator Tx3
Request product
- TX3
Accept product
- TX3
Actor Role D
- Executor Tx3
Promise product
- TX3
Execute product
- TX3
Declare product
- TX3