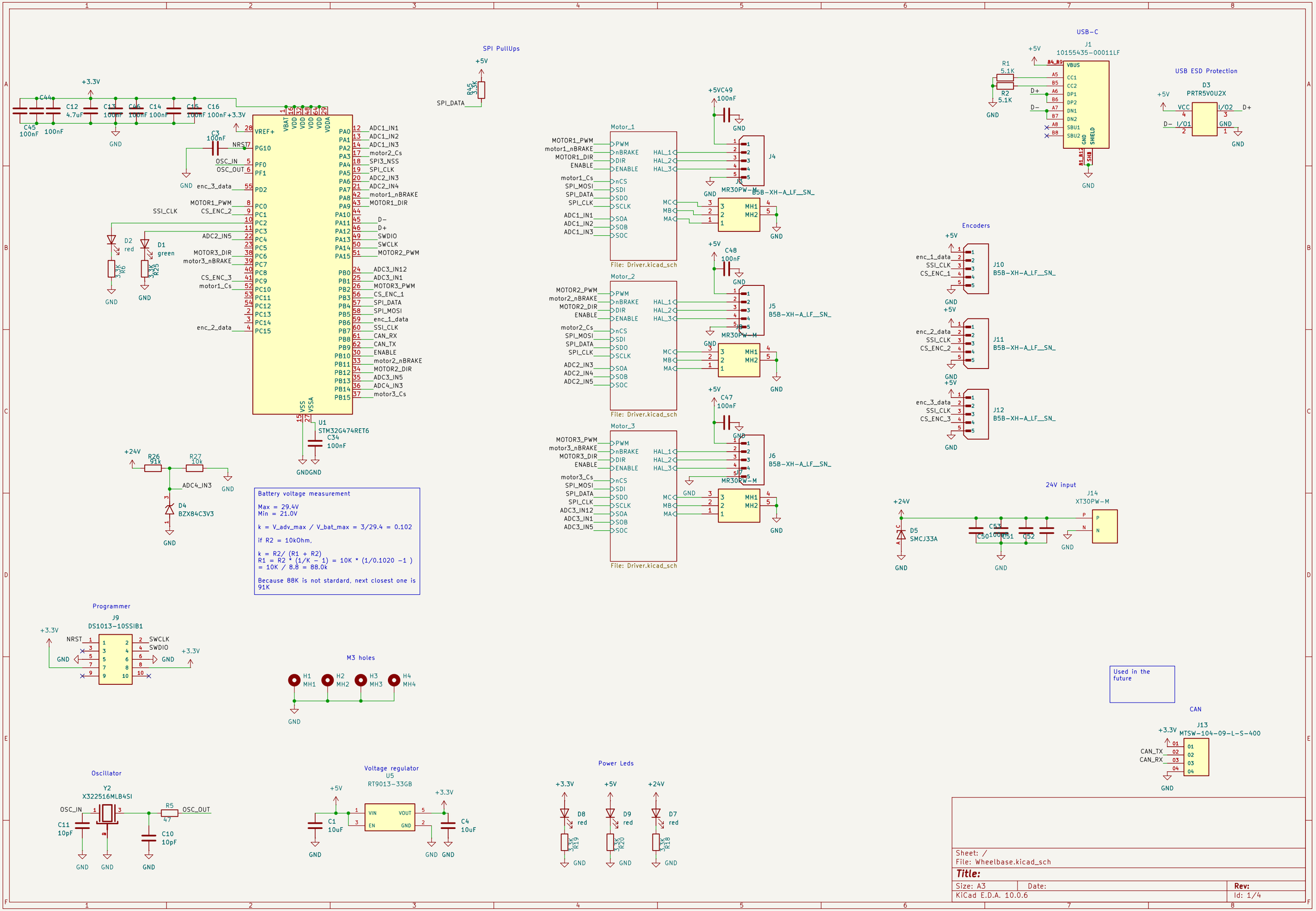
SPI PullUps
+5V
R45
3.3K
SPI_DATA
USB-C
J1
10155435-00011LF
R1
5.1K
R2
5.1K
VBUS
CC1
CC2
DP1
DP2
DN1
DN2
SBU1
SBU2
GND
SHIELD
D+
D-
USB ESD Protection
D3
PRTR5V0U2X
VCC
I/O1
I/O2
+3.3V
C44
C45
100nF
C12
4.7uF
C13
C46
C14
C15
C16
C3
100nF
NRST
PG10
OSC_IN
OSC_OUT
PF0
PF1
VREF+
VBAT
VDD
VDDA
VSS
VSSA
U1
STM32G474RET6
C34
100nF
PA0 ADC1_IN1
PA1 ADC1_IN2
PA2 ADC1_IN3
PA3 motor2_Cs
PA4 SPI3_NSS
PA5 SPI_CLK
PA6 ADC2_IN3
PA7 ADC2_IN4
PA8 motor1_nBRAKE
PA9 MOTOR1_DIR
PA10
PA11 D-
PA12 D+
PA13 SWDIO
PA14 SWCLK
PA15 MOTOR2_PWM
PB0 ADC3_IN12
PB1 ADC3_IN1
PB2 MOTOR3_PWM
PB3 CS_ENC_1
PB4 SPI_DATA
PB5 SPI_MOSI
PB6 enc_1_data
PB7 SSI_CLK
PB8 CAN_RX
PB9 CAN_TX
PB10 ENABLE
PB11 motor2_nBRAKE
PB12 MOTOR2_DIR
PB13 ADC3_IN5
PB14 ADC4_IN3
PB15 motor3_Cs
PD2 enc_3_data
PC0 MOTOR1_PWM
PC1 CS_ENC_2
PC2 SSI_CLK
PC3
PC4 ADC2_IN5
PC5
PC6 MOTOR3_DIR
PC7 motor3_nBRAKE
PC8
PC9 CS_ENC_3
PC10 motor1_Cs
PC11
PC12
PC13
PC14
PC15 enc_2_data
D2
red
D1
green
R6
3.3K
R25
3.3K
GND
+24V
R26
91k
R27
10k
ADC4_IN3
D4
BZX84C3V3
Battery voltage measurement
Max = 29.4V
Min = 21.0V
k = V_adv_max / V_bat_max = 3/29.4 = 0.102
if R2 = 10kOhm,
k = R2/ (R1 + R2)
R1 = R2 * (1/K - 1) = 10K * (1/0.1020 -1)
= 10K / 8.8 = 88.0k
Because 88K is not stardard, next closest one is 91K
Motor_1
PWM
nBRAKE
DIR
ENABLE
nCS
SDI
SDO
SCLK
SOA
SOB
SOC
HAL_1
HAL_2
HAL_3
MC
MB
MA
MOTOR1_PWM
motor1_nBRAKE
MOTOR1_DIR
ENABLE
motor1_Cs
SPI_MOSI
SPI_DATA
SPI_CLK
ADC1_IN1
ADC1_IN2
ADC1_IN3
File: Driver.kicad_sch
+5VC49
100nF
J4
MR30PW-M
B5B-XH-A_LF__SN_
MH1
MH2
Motor_2
MOTOR2_PWM
motor2_nBRAKE
MOTOR2_DIR
ENABLE
motor2_Cs
SPI_MOSI
SPI_DATA
SPI_CLK
ADC2_IN3
ADC2_IN4
ADC2_IN5
File: Driver.kicad_sch
C48
100nF
J5
B5B-XH-A_LF__SN_
Motor_3
MOTOR3_PWM
motor3_nBRAKE
MOTOR3_DIR
ENABLE
motor3_Cs
SPI_MOSI
SPI_DATA
SPI_CLK
ADC3_IN12
ADC3_IN1
ADC3_IN5
File: Driver.kicad_sch
C47
100nF
J6
B5B-XH-A_LF__SN_
Encoders
J10
B5B-XH-A_LF__SN_
enc_1_data
SSI_CLK
CS_ENC_1
J11
B5B-XH-A_LF__SN_
enc_2_data
SSI_CLK
CS_ENC_2
J12
B5B-XH-A_LF__SN_
enc_3_data
SSI_CLK
CS_ENC_3
24V input
J14
XT30PW-M
D5
SMCJ33A
C50
C51
C52
C53
100nF
Programmer
J9
DS1013-10SSIB1
NRST
SWCLK
SWDIO
M3 holes
H1
MH1
H2
MH2
H3
MH3
H4
MH4
Used in the future
CAN
J13
MTSW-104-09-L-S-400
CAN_TX
CAN_RX
Oscillator
Y2
X322516MLB4SI
OSC_IN
OSC_OUT
R5
47
C11
10pF
C10
10pF
Voltage regulator
U5
RT9013-33GB
VIN
VOUT
EN
GND
C1
10uF
C4
10uF
Power Leds
D8
red
D9
red
D7
red
R19
3.3K
R20
3.3K
R18
3.3K
Sheet: /
File: Wheelbase.kicad_sch
Title:
Size: A3
Date:
Rev:
KiCad E.D.A. 10.0.6
Id: 1/4

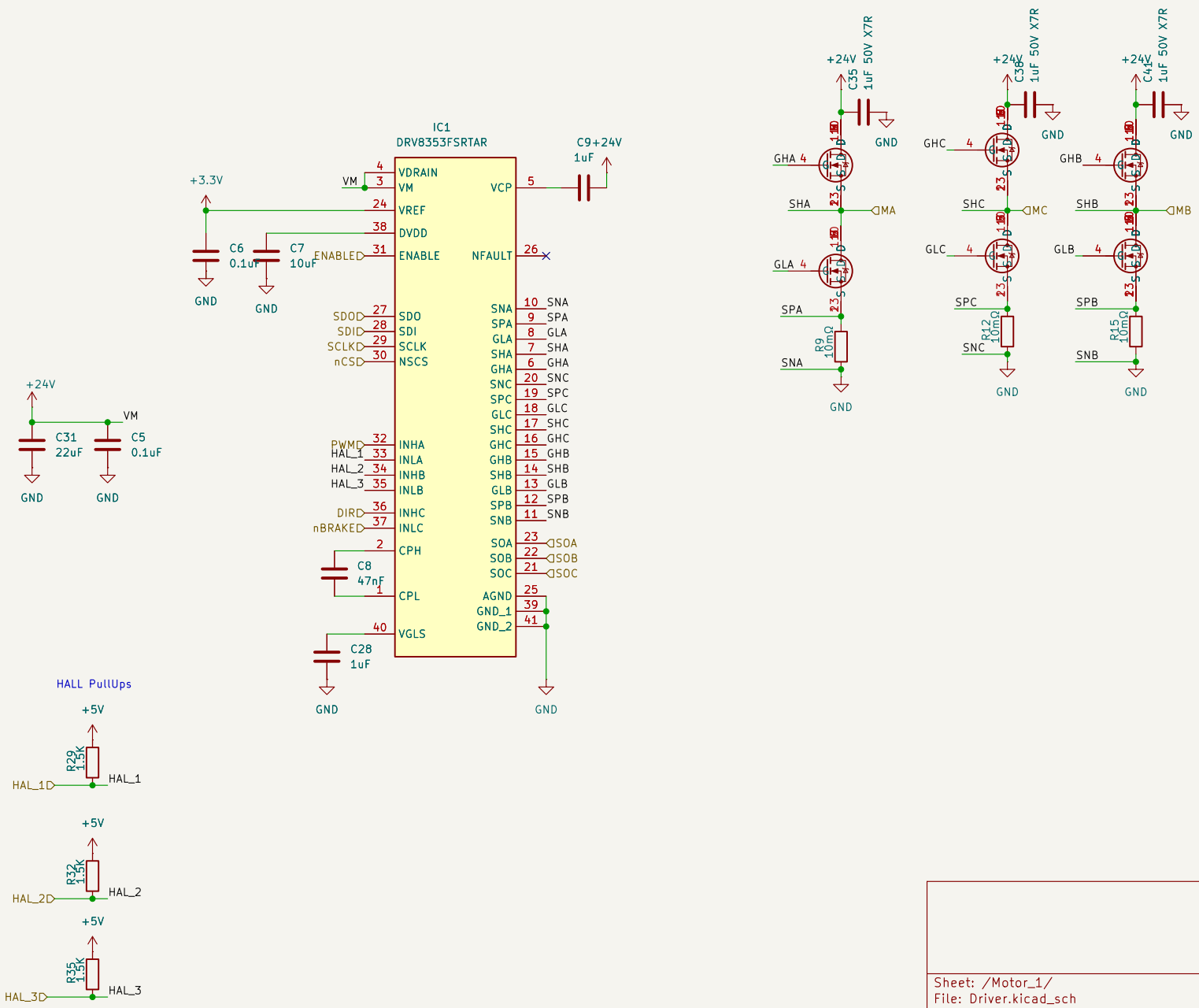

Sheet: /Motor_1/
File: Driver.kicad_sch

Title:

Size: A4	Date:	Rev:
KiCad E.D.A. 10.0.6		Id: 2/4

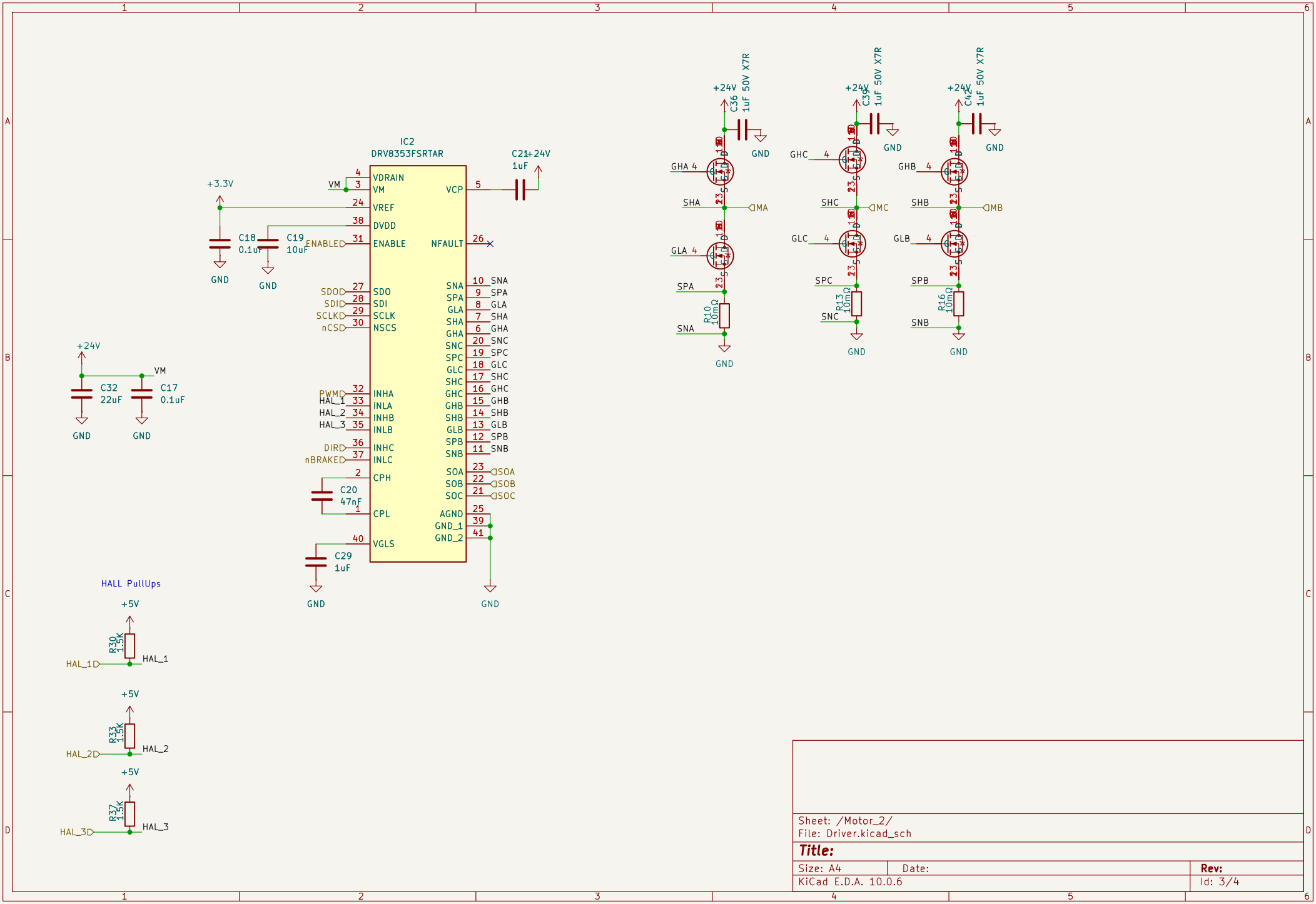

Sheet: /Motor_2/
File: Driver.kicad_sch

Title:

Size: A4	Date:	Rev:
KiCad E.D.A. 10.0.6		Id: 3/4

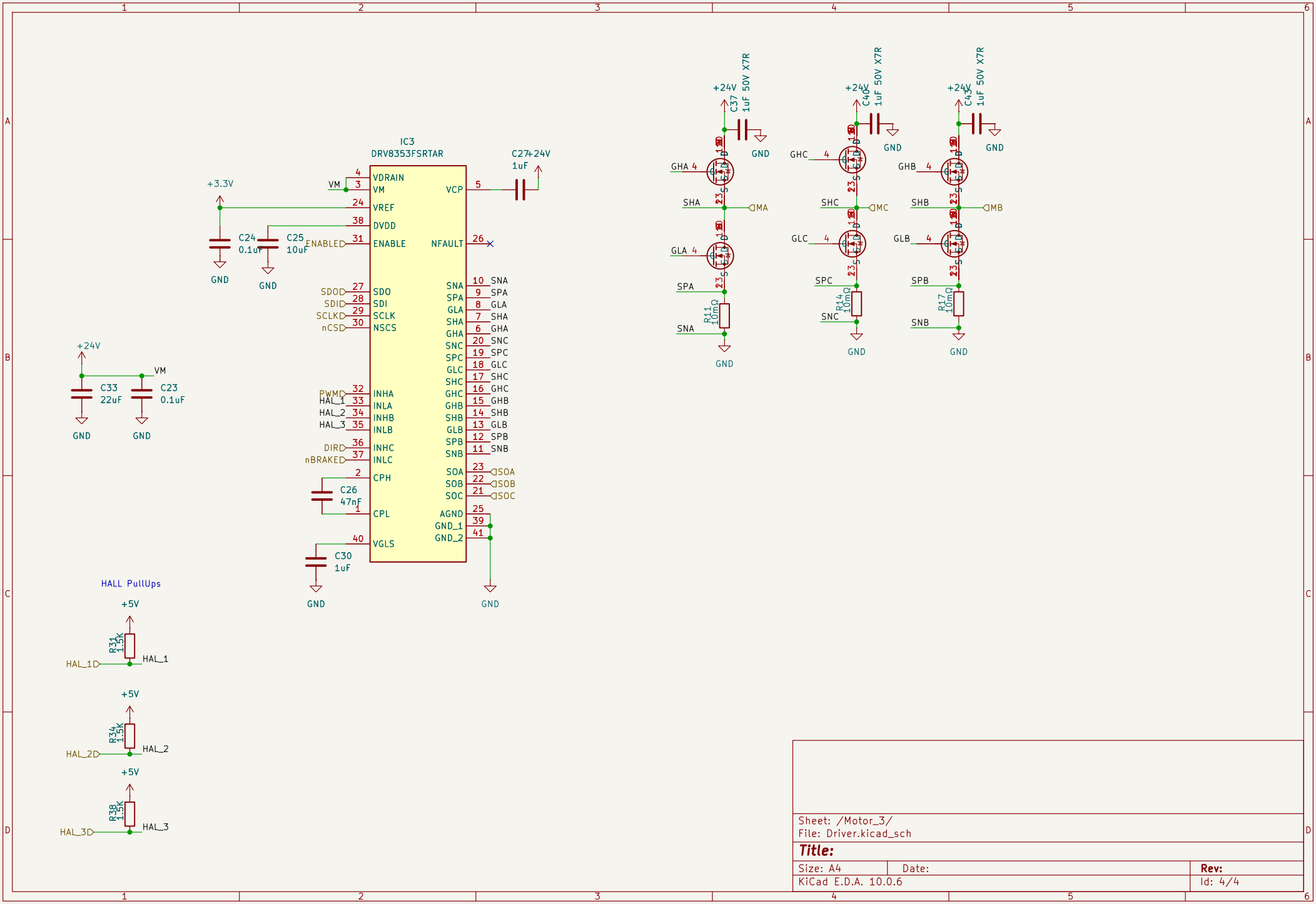
IC3
DRV8353FSRTAR
VDRAIN
VM
VREF
DVDD
ENABLE
SDO
SDI
SCLK
NSCS
INHA
INLA
INHB
INLB
INHC
INLC
CPH
CPL
VGLS
VCP
NFAULT
SNA
SPA
GLA
SHA
GHA
SNC
SPC
GLC
SHC
GHC
GHB
SHB
GLB
SPB
SNB
SOA
SOB
SOC
AGND
GND_1
GND_2
+3.3V
C24 0.1uF
C25 10uF
C27 1uF
+24V
C26 47nF
C30 1uF
C33 22uF
C23 0.1uF
VM
ENABLED
SDOD
SDID
SCLKD
nCSD
PWMD
HAL_1
HAL_2
HAL_3
DIRD
nBRAKED
GND
HALL PullUps
+5V
R31 1.5k
R34 1.5k
R38 1.5k
HAL_1D
HAL_2D
HAL_3D
C37 1uF 50V X7R
C40 1uF 50V X7R
C43 1uF 50V X7R
R11 10mΩ
R14 10mΩ
R17 10mΩ
MA
MB
MC
Sheet: /Motor_3/
File: Driver.kicad_sch
Title:
Size: A4
Date:
Rev:
KiCad E.D.A. 10.0.6
Id: 4/4