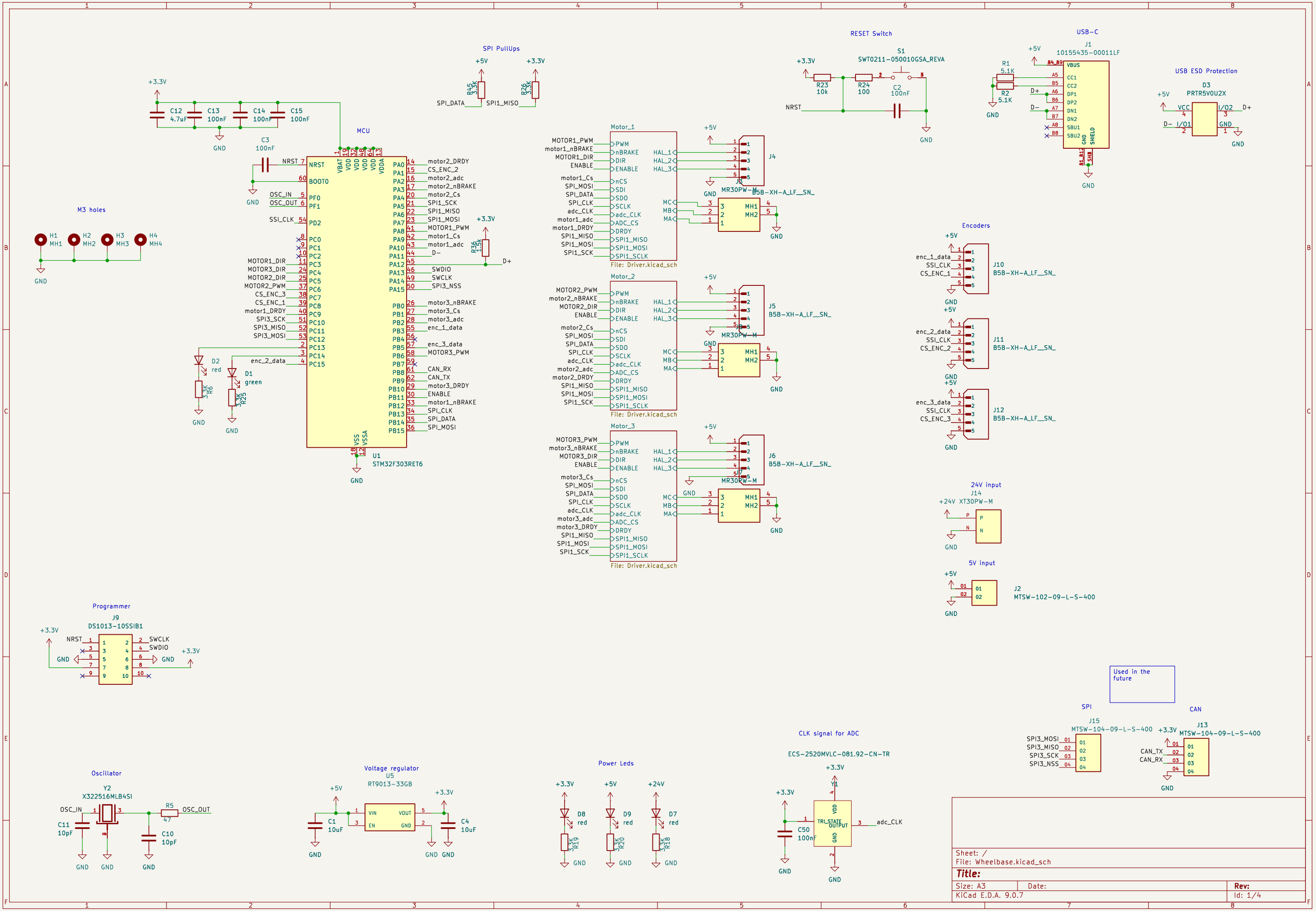
SPI PullUps
+5V
+3.3V
R45 3.3k
R36 3.3k
SPI_DATA
SPI1_MISO
RESET Switch
S1
SWT0211-050010GSA_REVA
R23 10k
R24 100
C2 100nF
NRST
GND
USB-C
J1
10155435-00011LF
R1 5.1K
R2 5.1K
VBUS
CC1
CC2
DP1
DP2
DN1
DN2
SBU1
SBU2
SHIELD
D+
D-
USB ESD Protection
D3
PRTR5V0U2X
VCC
I/O1
I/O2
C12 4.7uF
C13 100nF
C14 100nF
C15 100nF
C3 100nF
MCU
U1
STM32F303RET6
NRST
BOOT0
OSC_IN
OSC_OUT
SSI_CLK
MOTOR1_DIR
MOTOR3_DIR
MOTOR2_DIR
MOTOR2_PWM
CS_ENC_3
CS_ENC_1
motor1_DRDY
SPI3_SCK
SPI3_MISO
SPI3_MOSI
enc_2_data
motor2_DRDY
CS_ENC_2
motor2_adc
motor2_nBRAKE
motor2_Cs
SPI1_SCK
SPI1_MISO
SPI1_MOSI
MOTOR1_PWM
motor1_Cs
motor1_adc
SWDIO
SWCLK
SPI3_NSS
motor3_nBRAKE
motor3_Cs
motor3_adc
enc_1_data
enc_3_data
MOTOR3_PWM
CAN_RX
CAN_TX
motor3_DRDY
ENABLE
motor1_nBRAKE
SPI_CLK
SPI_DATA
SPI_MOSI
M3 holes
H1 MH1
H2 MH2
H3 MH3
H4 MH4
D2 red
D1 green
R6 3.3K
R25 3.3K
R36 1.5k
Motor_1
Motor_2
Motor_3
PWM
nBRAKE
DIR
ENABLE
nCS
SDI
SDO
SCLK
adc_CLK
ADC_CS
DRDY
SPI1_MISO
SPI1_MOSI
SPI1_SCLK
HAL_1
HAL_2
HAL_3
MC
MB
MA
File: Driver.kicad_sch
J4
J5
J6
J7
MR30PW-M
B5B-XH-A_LF__SN_
MH1
MH2
Encoders
J10
J11
J12
enc_1_data
enc_2_data
enc_3_data
24V input
J14
+24V
XT30PW-M
P
N
5V input
J2
MTSW-102-09-L-S-400
Programmer
J9
DS1013-10SSIB1
SWCLK
SWDIO
Used in the future
SPI
J15
MTSW-104-09-L-S-400
CAN
J13
CAN_TX
CAN_RX
Oscillator
Y2
X322516MLB4SI
R5 47
C11 10pF
C10 10pF
Voltage regulator
U5
RT9013-33GB
VIN
VOUT
EN
C1 10uF
C4 10uF
Power Leds
D8 red
D9 red
D7 red
R19 3.3K
R20 3.3K
R18 3.3K
CLK signal for ADC
ECS-2520MVLC-081.92-CN-TR
Y1
VDD
TRI_STATE
OUTPUT
C50 100nF
adc_CLK
Sheet: /
File: Wheelbase.kicad_sch
Title:
Size: A3
Date:
Rev:
KiCad E.D.A. 9.0.7
Id: 1/4

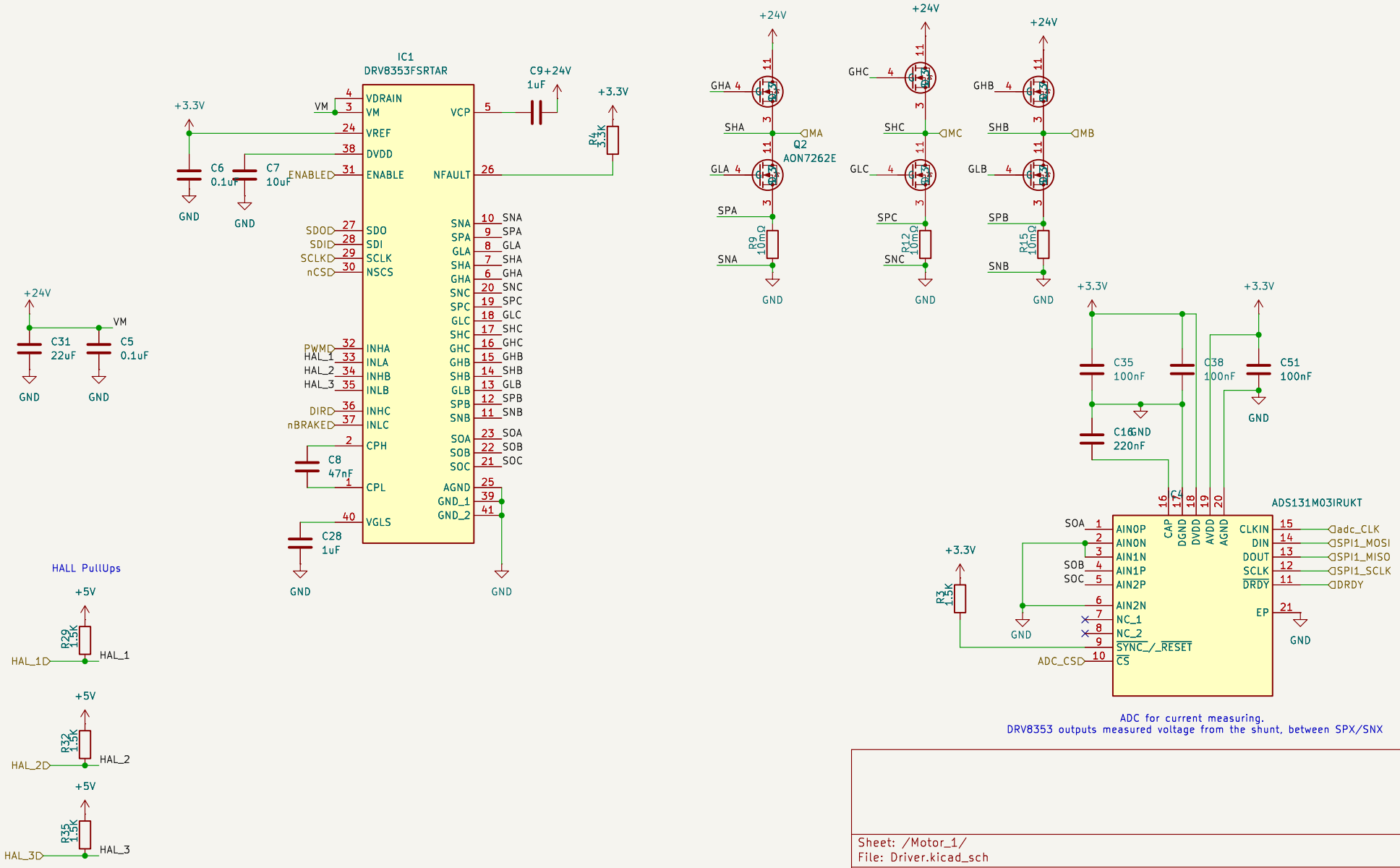

Sheet: /Motor_1/
File: Driver.kicad_sch

Title:

Size: A4	Date:	Rev:
KiCad E.D.A. 9.0.7		Id: 2/4

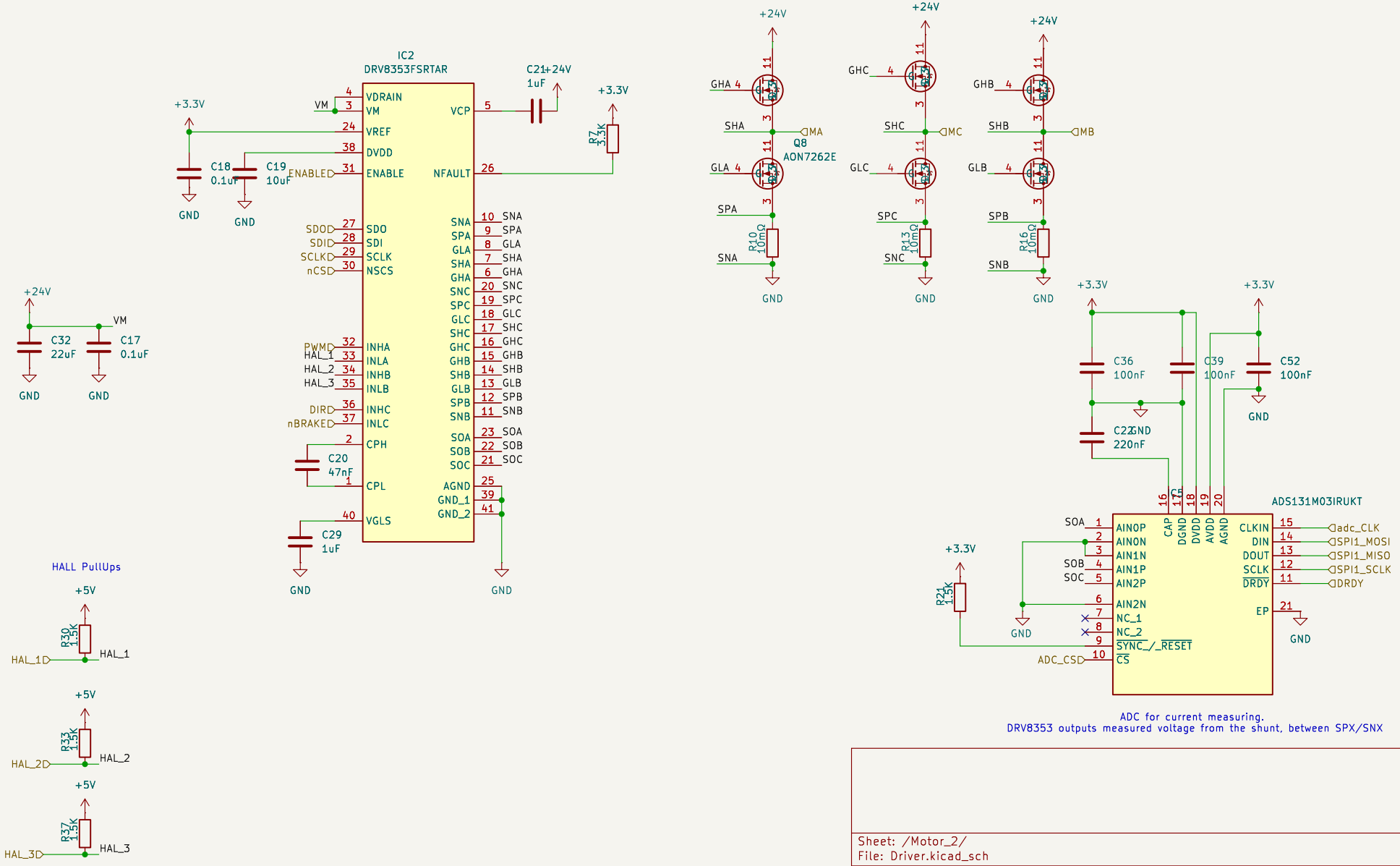

Sheet: /Motor_2/
File: Driver.kicad_sch

Title:

Size: A4	Date:	Rev:
KiCad E.D.A. 9.0.7		Id: 3/4

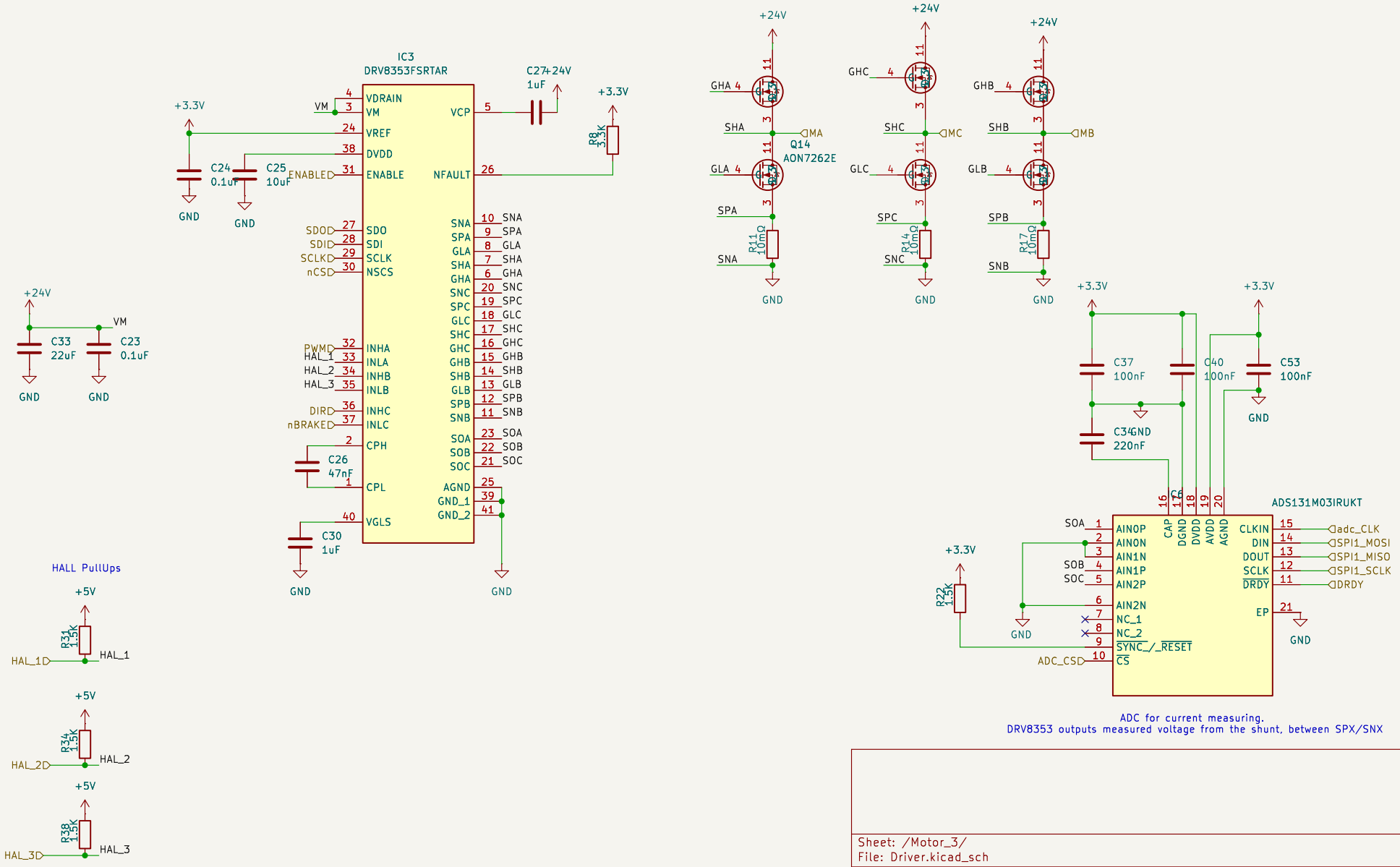

Sheet: /Motor_3/
File: Driver.kicad_sch

Title:

Size: A4	Date:	Rev:
KiCad E.D.A. 9.0.7		Id: 4/4