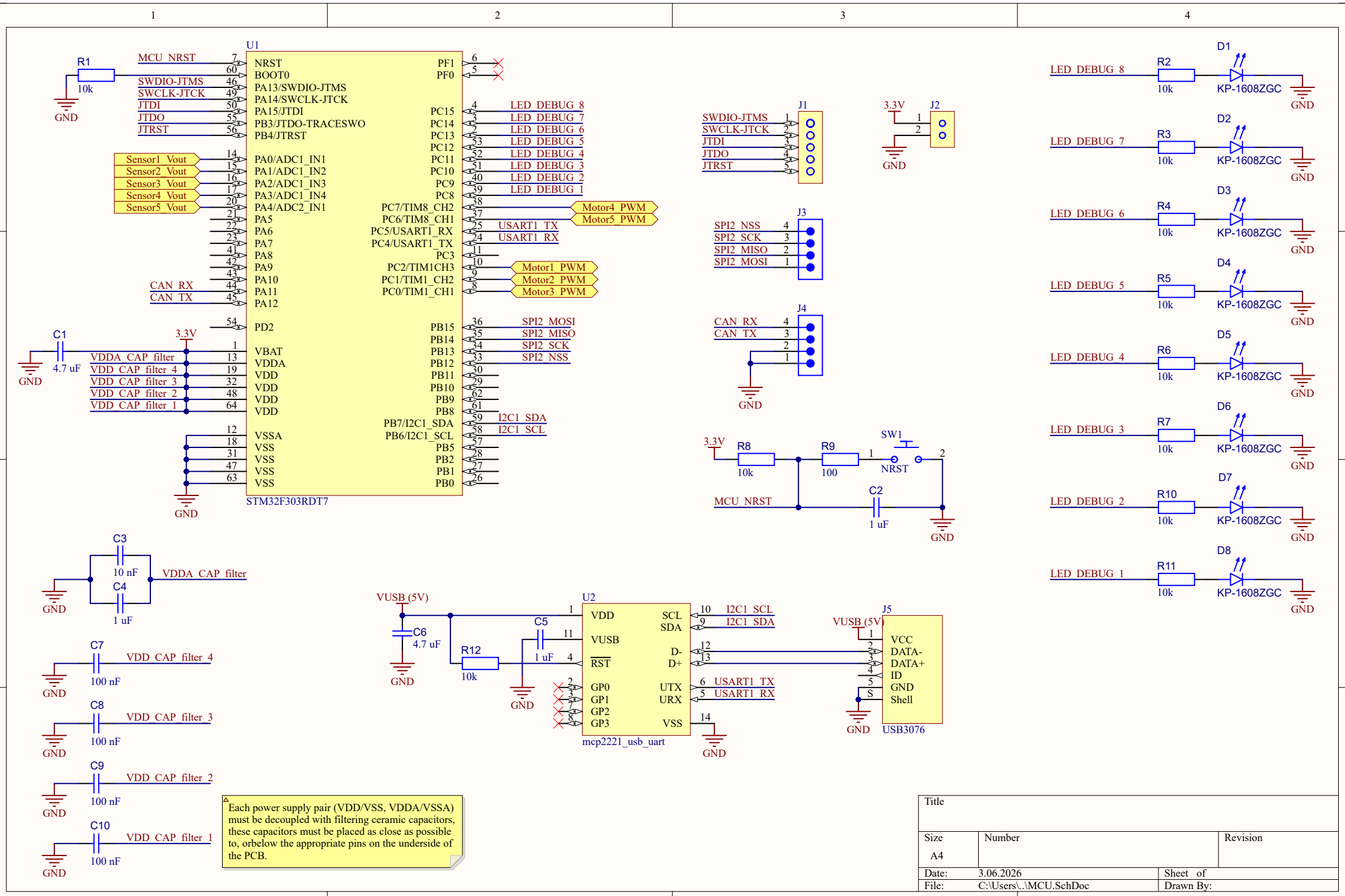
U1
STM32F303RDT7
NRST
BOOT0
PA13/SWDIO-JTMS
PA14/SWCLK-JTCK
PA15/JTDI
PB3/JTDO-TRACESWO
PB4/JTRST
PA0/ADC1_IN1
PA1/ADC1_IN2
PA2/ADC1_IN3
PA3/ADC1_IN4
PA4/ADC2_IN1
PA5
PA6
PA7
PA8
PA9
PA10
PA11
PA12
PD2
VBAT
VDDA
VDD
VSSA
VSS
PF1
PF0
PC15
PC14
PC13
PC12
PC11
PC10
PC9
PC8
PC7/TIM8_CH2
PC6/TIM8_CH1
PC5/USART1_RX
PC4/USART1_TX
PC3
PC2/TIM1CH3
PC1/TIM1_CH2
PC0/TIM1_CH1
PB15
PB14
PB13
PB12
PB11
PB10
PB9
PB8
PB7/I2C1_SDA
PB6/I2C1_SCL
PB5
PB2
PB1
PB0
MCU_NRST
SWDIO-JTMS
SWCLK-JTCK
JTDI
JTDO
JTRST
Sensor1_Vout
Sensor2_Vout
Sensor3_Vout
Sensor4_Vout
Sensor5_Vout
CAN_RX
CAN_TX
LED_DEBUG_8
LED_DEBUG_7
LED_DEBUG_6
LED_DEBUG_5
LED_DEBUG_4
LED_DEBUG_3
LED_DEBUG_2
LED_DEBUG_1
Motor4_PWM
Motor5_PWM
USART1_TX
USART1_RX
Motor1_PWM
Motor2_PWM
Motor3_PWM
SPI2_MOSI
SPI2_MISO
SPI2_SCK
SPI2_NSS
I2C1_SDA
I2C1_SCL
VDDA_CAP_filter
VDD_CAP_filter_4
VDD_CAP_filter_3
VDD_CAP_filter_2
VDD_CAP_filter_1
R1 10k
C1 4.7 uF
3.3V
GND
J1
J2
J3
J4
R2 10k
R3 10k
R4 10k
R5 10k
R6 10k
R7 10k
R10 10k
R11 10k
D1 KP-1608ZGC
D2 KP-1608ZGC
D3 KP-1608ZGC
D4 KP-1608ZGC
D5 KP-1608ZGC
D6 KP-1608ZGC
D7 KP-1608ZGC
D8 KP-1608ZGC
R8 10k
R9 100
SW1
NRST
C2 1 uF
C3 10 nF
C4 1 uF
C5 1 uF
C6 4.7 uF
C7 100 nF
C8 100 nF
C9 100 nF
C10 100 nF
R12 10k
VUSB (5V)
U2
mcp2221_usb_uart
VDD
VUSB
RST
GP0
GP1
GP2
GP3
SCL
SDA
D-
D+
UTX
URX
VSS
J5
USB3076
VCC
DATA-
DATA+
ID
GND
Shell
Each power supply pair (VDD/VSS, VDDA/VSSA) must be decoupled with filtering ceramic capacitors, these capacitors must be placed as close as possible to, orbelow the appropriate pins on the underside of the PCB.
Title
Size
A4
Number
Revision
Date: 3.06.2026
Sheet of
File: C:\Users\..\MCU.SchDoc
Drawn By:

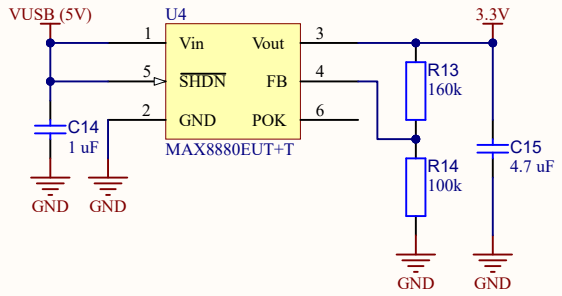

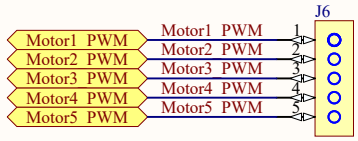

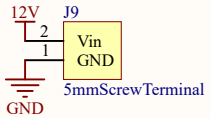

R13 must be 1.6 times R14 to achieve output voltage close to 3.3V.
Vfb = 1.257,
Vout = Vfb*(R13 + R14)/ R14 = 3.268 V.
Settin R14 to 1 megaohm and calculating R13 would result in marginally less current consumption.

ACS712 Input Power for sensing can be connected either way.

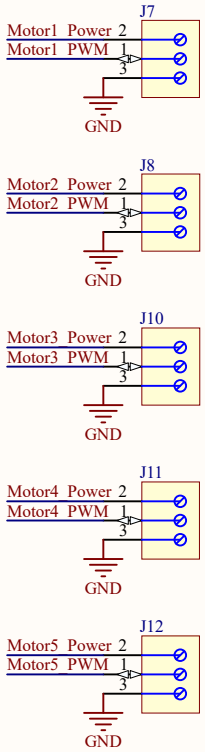

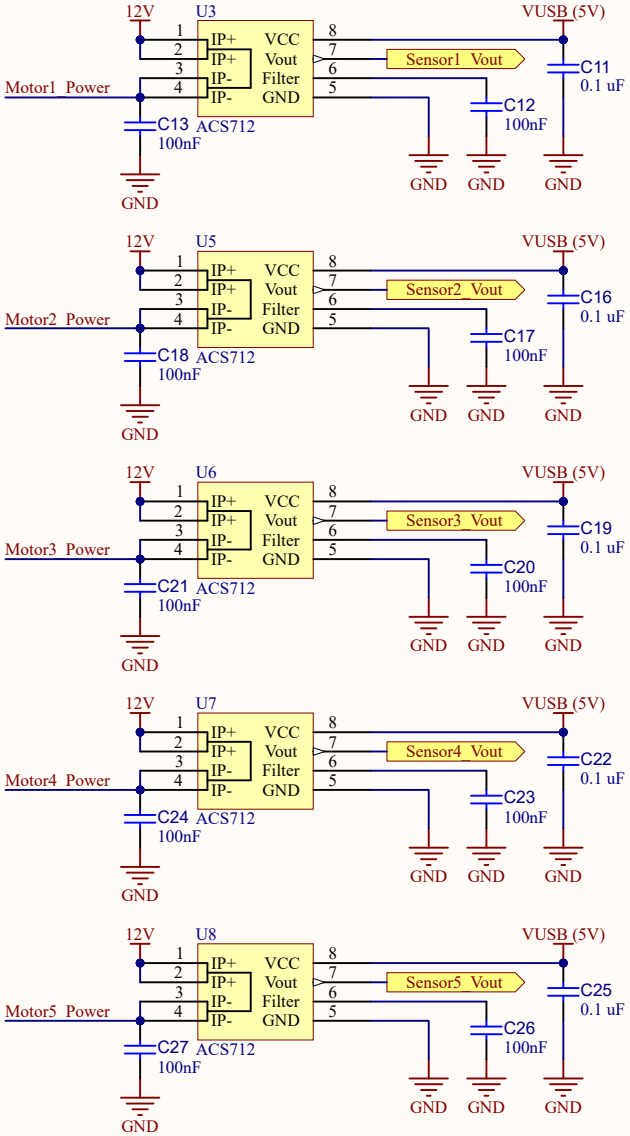

Title		
Size A4	Number	Revision
Date: 3.06.2026		Sheet of
File: C:\Users\..\Signal and supply.SchDoc		Drawn By: