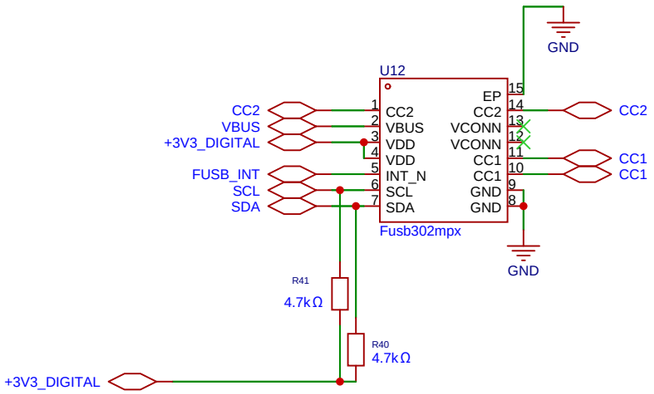

USB-C Input and Protection

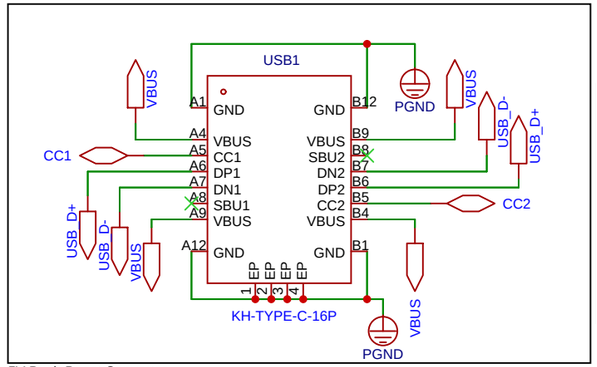

Battery Interface

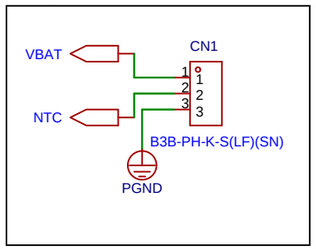

Li-Ion Charger & Power Path

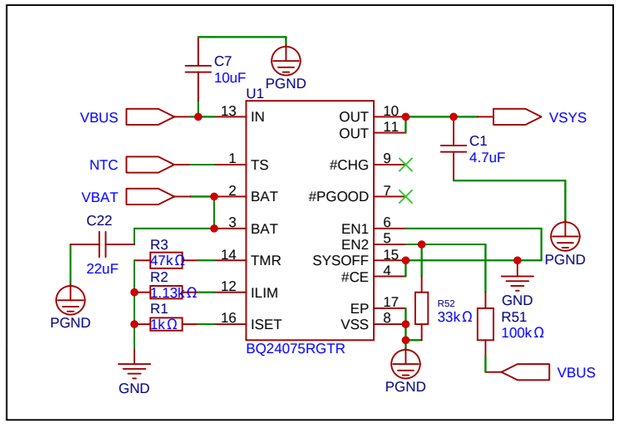

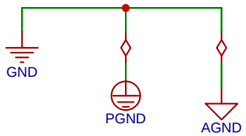

+5V Buck-Boost Converter

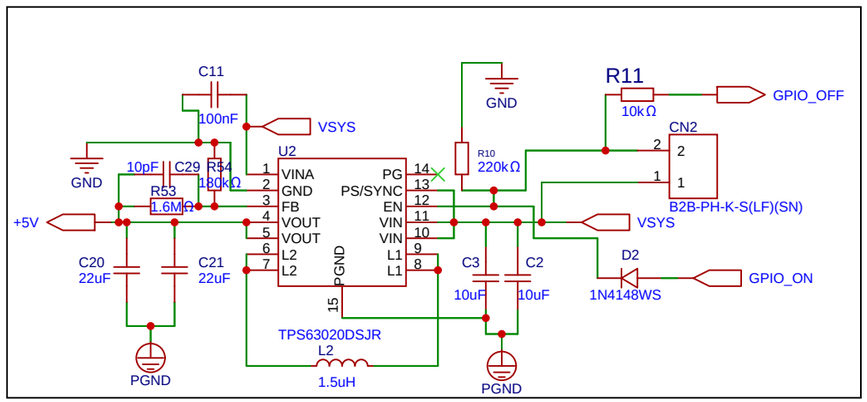

±4.5V Audio Supply

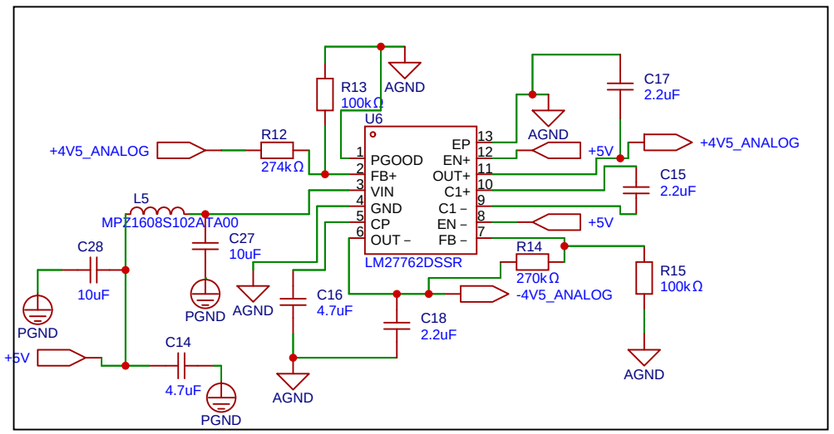

+3.3V Digital LDO

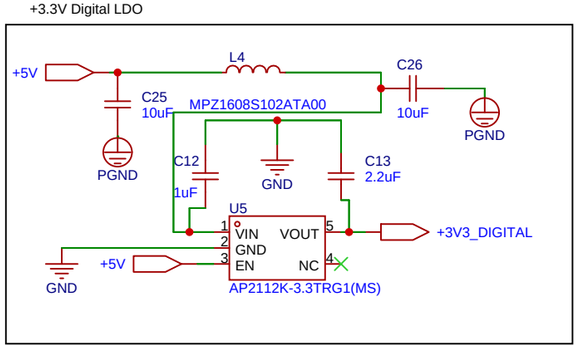

Schematic	Schematic1	Create at	2026-03-12
		Update at	2026-03-25
Board	Board1	Page	P1
Drawn	MOSSE		
Reviewed			
	Version	Size	Page 1 Total 5
EasyEDA	V1.0	A4	EasyEDA.com

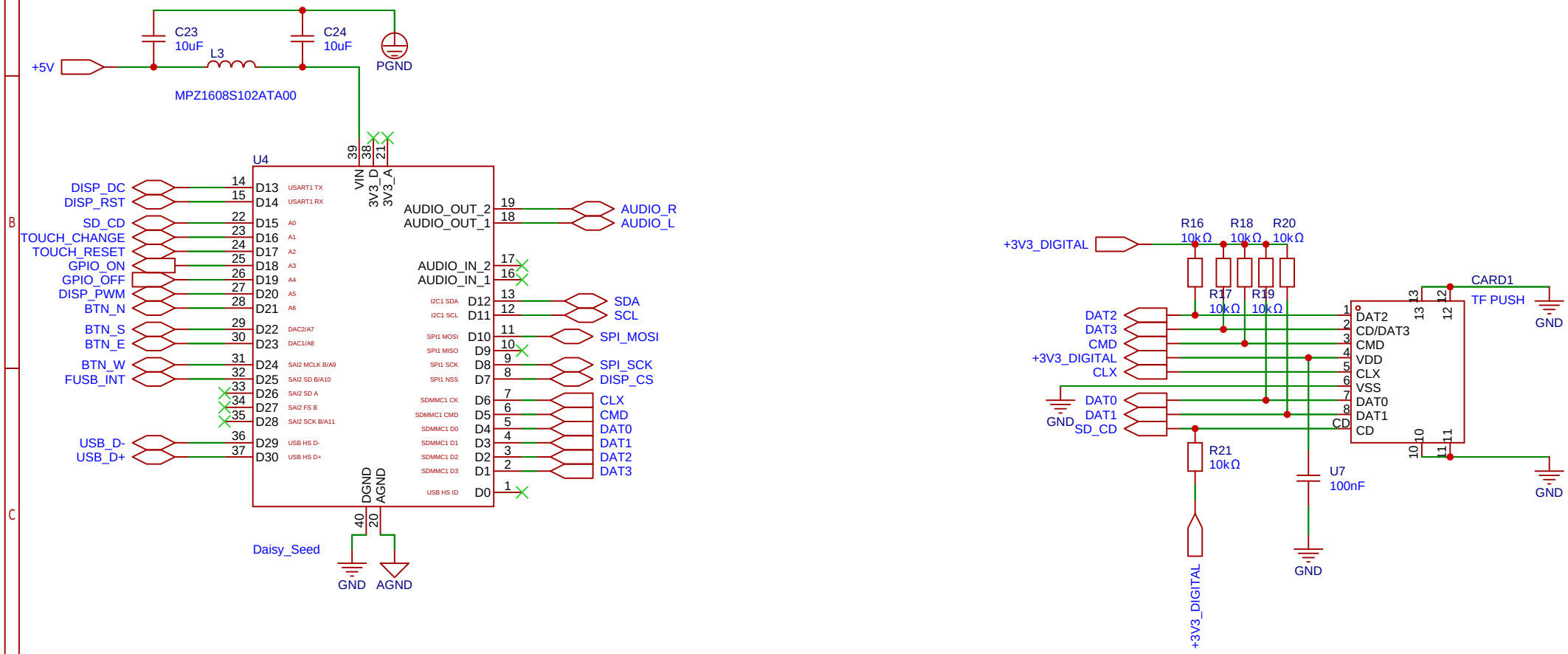

Schematic	Schematic1	Create at	2026-03-13
		Update at	2026-03-15
Board	Board1	Page	P3
Drawn		MOSSE	
Reviewed			
		Version	Size	Page 2 Total 5
EasyEDA		V1.0	A4	EasyEDA.com

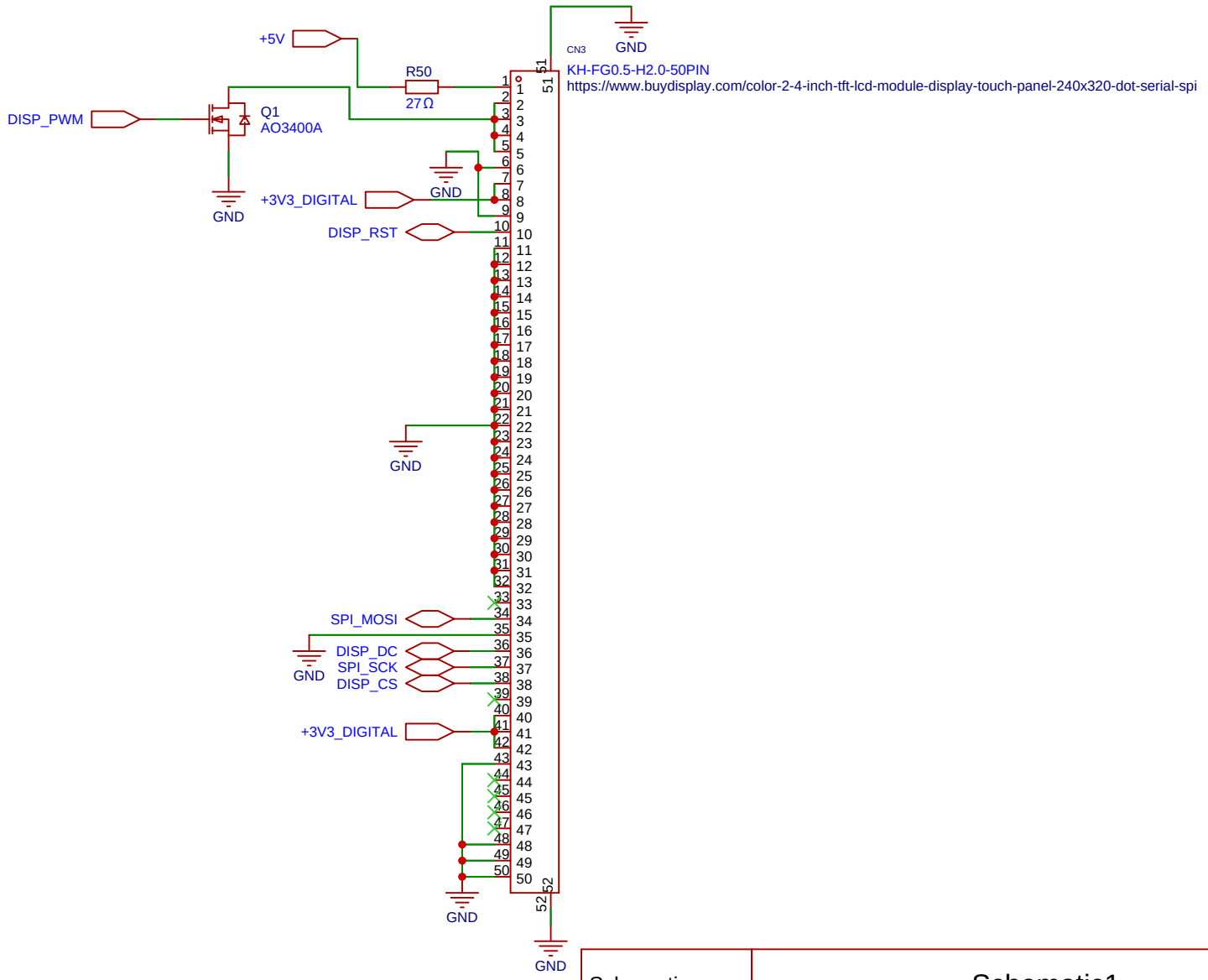

Schematic	Schematic1	Create at	2026-03-15
		Update at	2026-03-15
Board	Board1	Page	P4
Drawn		MOSSE	
Reviewed			
		Version	Size	Page 3 Total 5
EasyEDA		V1.0	A4	EasyEDA.com

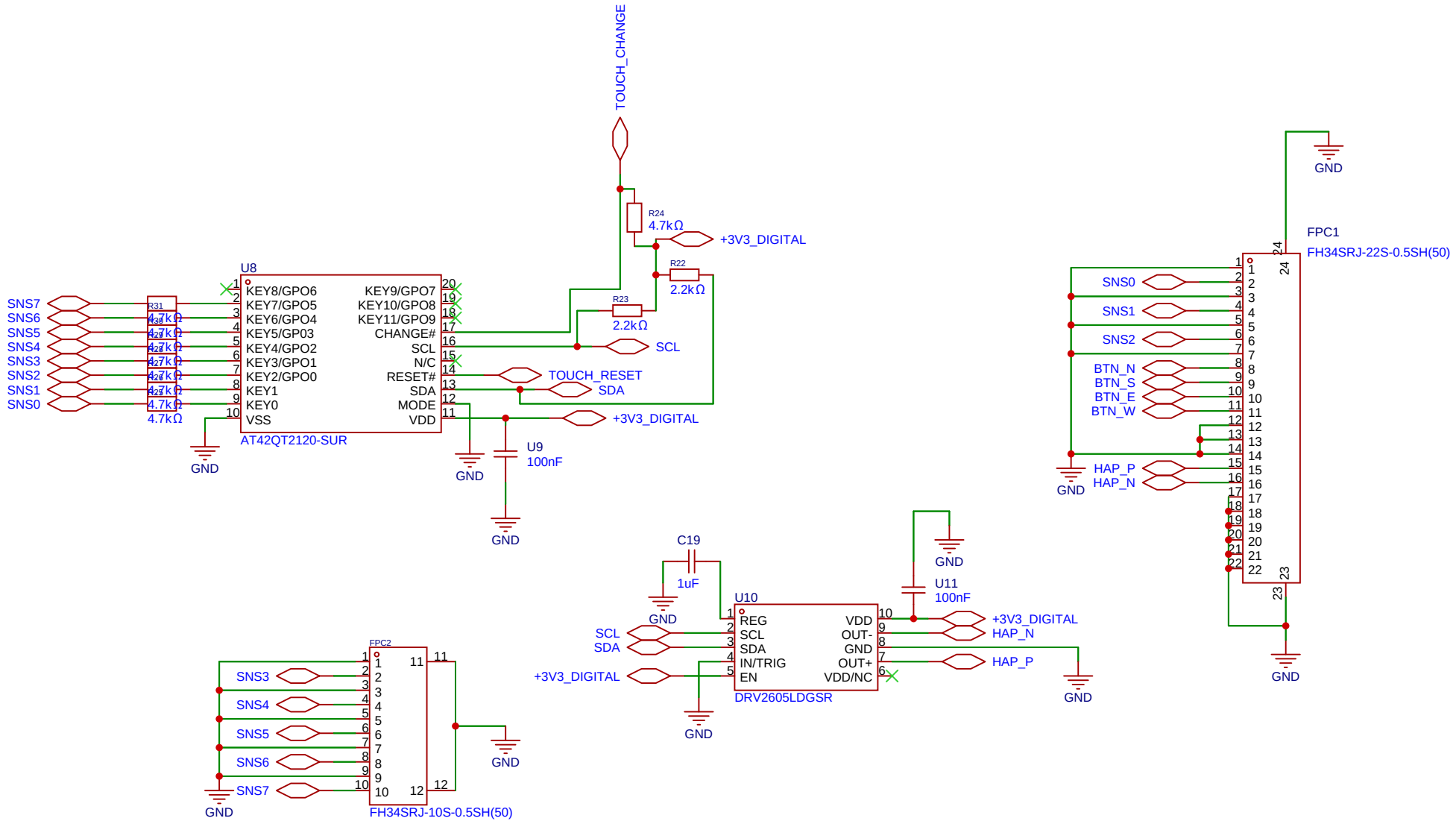

Schematic	Schematic1	Create at	2026-03-15
		Update at	2026-03-15
Board	Board1	Page	P5
Drawn		MOSSE	
Reviewed			
		Version	Size	Page 4 Total 5
EasyEDA		V1.0	A4	EasyEDA.com

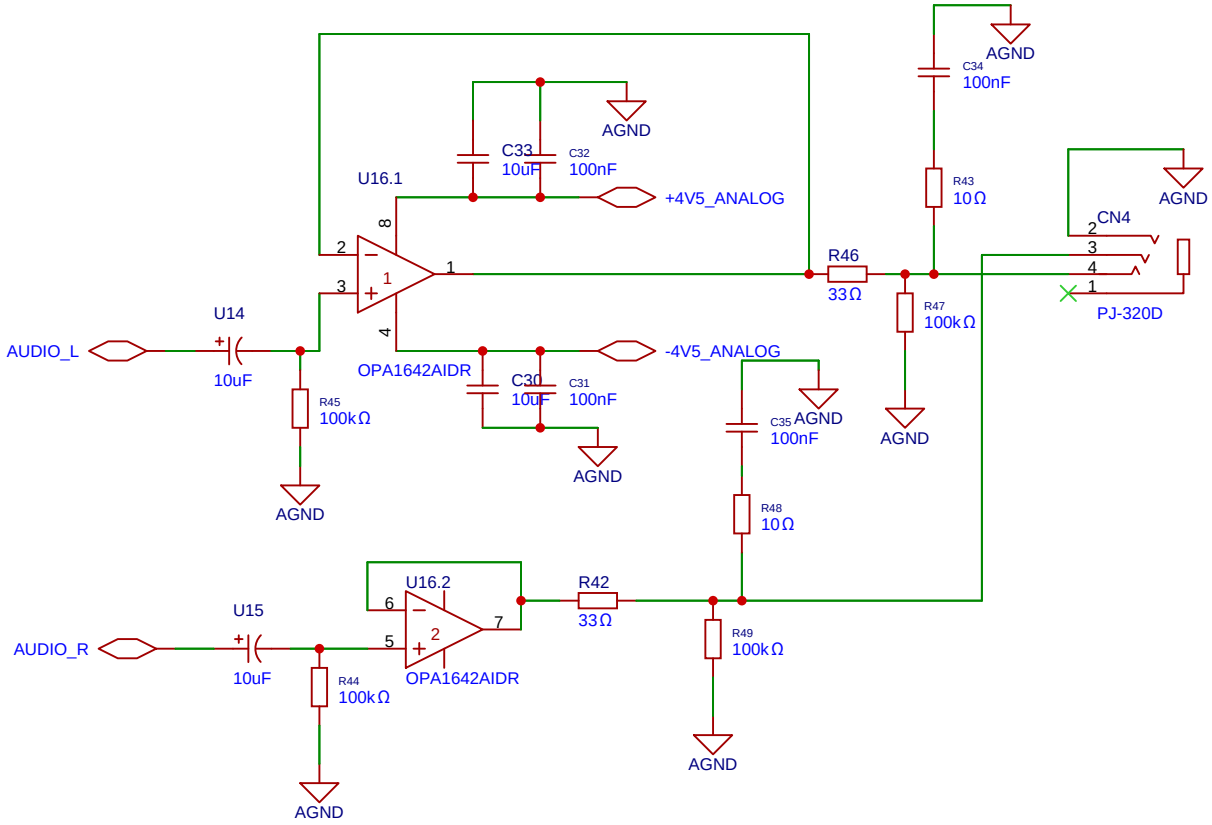

Schematic	Schematic1	Create at	2026-03-15
		Update at	2026-03-25
Board	Board1	Page	P6
Drawn		MOSSE	
Reviewed			
		Version	Size	Page 5 Total 5
EasyEDA		V1.0	A4	EasyEDA.com