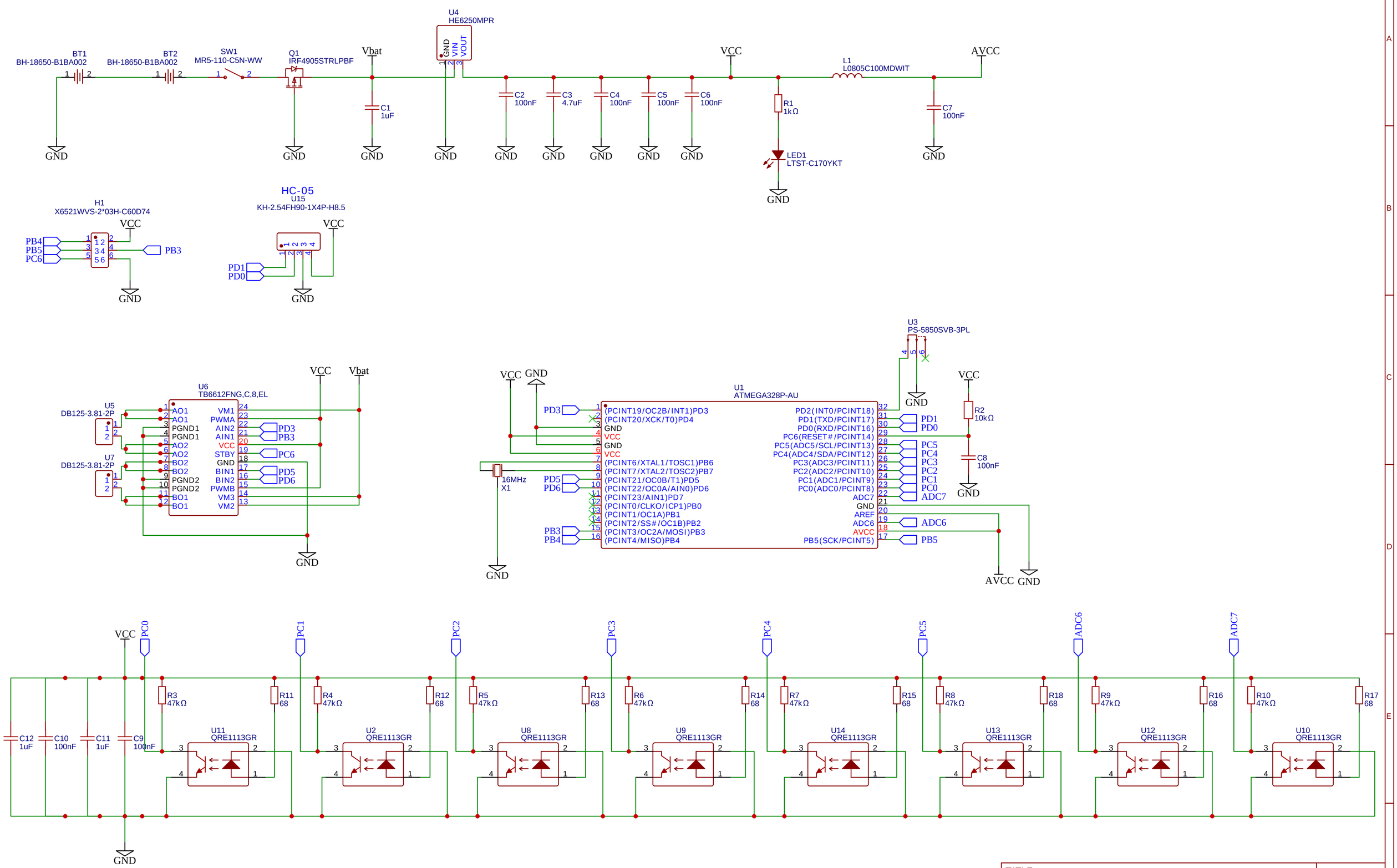

TITLE: Linefollower		REV: 1.0
HO GENT	Company: Hogent	Sheet: 1/1
	Date: 2022-10-20 Drawn By: Senne De Craene	