Schematic Sheets

#	Name	File	Description
1	Main	SensWear_Main.SchDoc	Top-level schematic showing system hierarchy and interconnection between components
2	MCU	SensWear_MCU.SchDoc	Micro-Controller Unit (MCU)
3	Memory	SensWear_Memory.SchDoc	External EEPROM / non-volatile memory
4	Power	SensWear_Power.SchDoc	Battery input, voltage regulation, charging circuitry, and daughter board regulator
5	MPU	SensWear_MPU.SchDoc	Motion sensing section (IMU)
6	LED	SensWear_RGB.SchDoc	RGB/status LED circuitry
7	Debug	SensWear_Debug.SchDoc	Debug and development interface including UART and SWD/programming access
8	DaughterBoard	SensWear_DaughterBoard.SchDoc	Modular daughter-board interface exposing power, communication buses, and GPIOs

Revision History

Revision	Date	Description
A0	May 2025	Initial validation design on rigid PCB
B0	March 2026	Flexible PCB manufacturing updates

SensWear-V1R1

Designer/Engineer Yusein Ali	Board Title SensWear-Hub		
Drawn By Yusein Ali	Document Name SensWear-V1R1-Hub-		
Approved By Dariush Salami	Ver. 1	Rev. B0	Date 01.03.2026

POWER

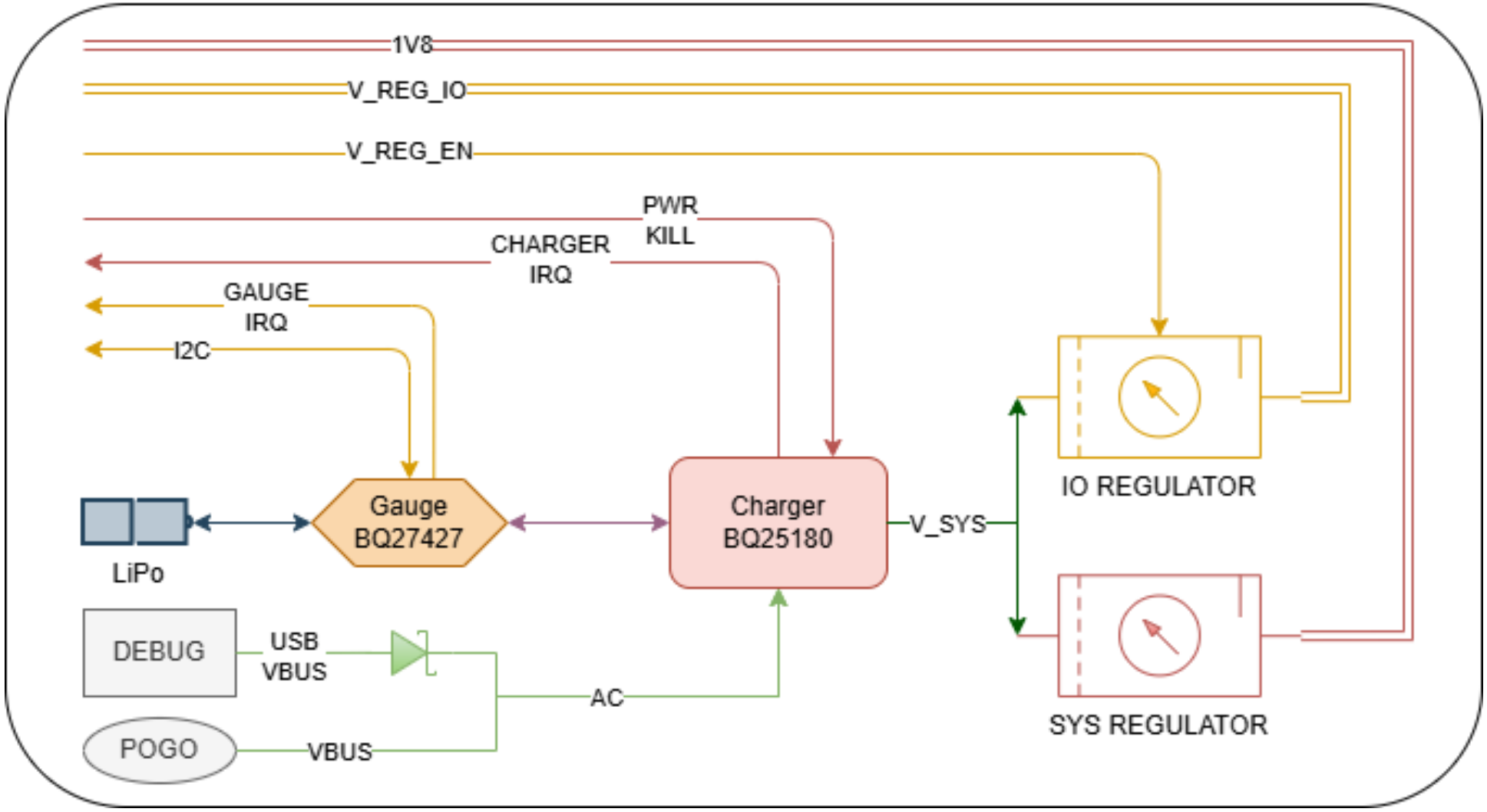

SensWear-V1R1

Designer/Engineer Yusein Ali	Board Title SensWear-Hub		
Drawn By Yusein Ali	Document Name SensWear-V1R1-Hub-		
Approved By Dariush Salami	Ver. 1	Rev. B0	Date 01.03.2026

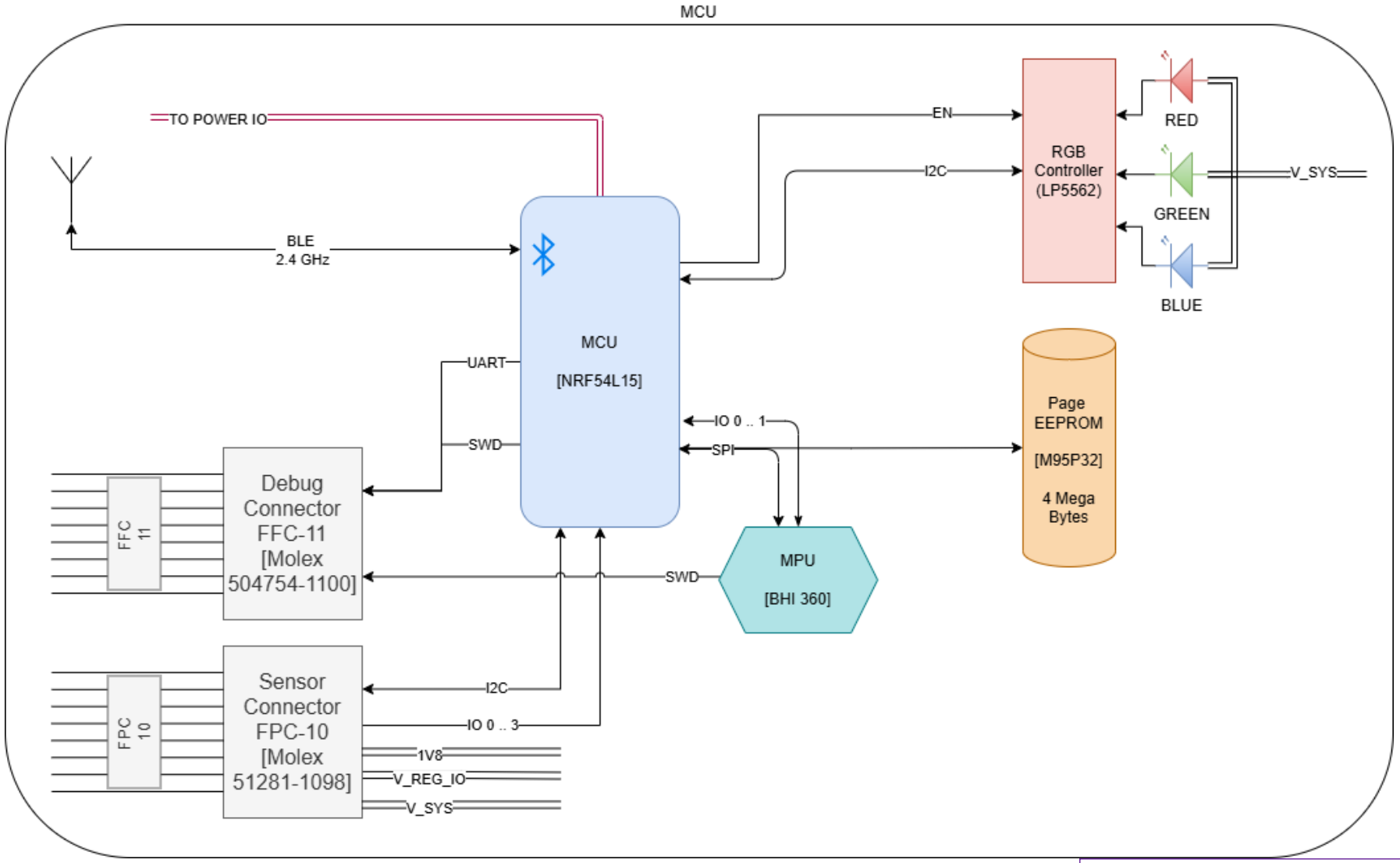

SensWear-V1R1

Designer/Engineer	Board Title		
Yusein Ali	SensWear-Hub		
Drawn By	**Document Name**		
Yusein Ali	SensWear-V1R1-Hub-		
Approved By	**Ver.**	**Rev.**	**Date**
Dariush Salami	1	B0	01.03.2026

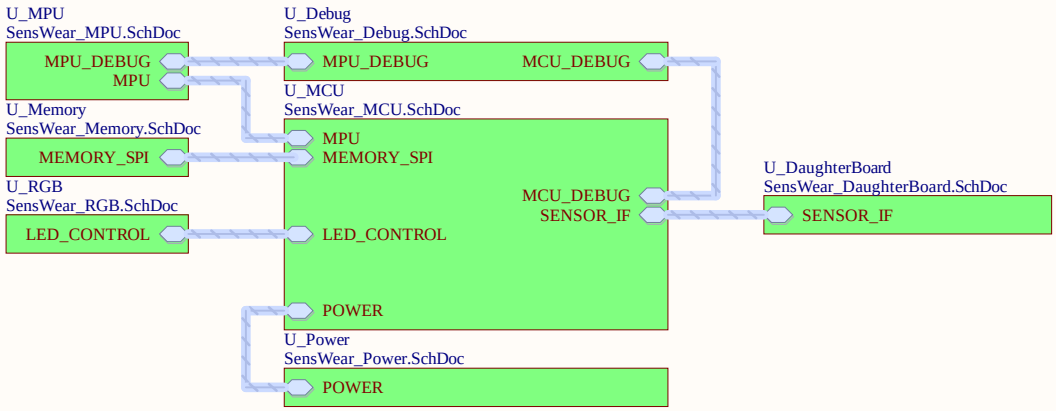

	SensWear-V1R1			
Designer/Engineer Yusein Ali	Board Title SensWear-Hub			
Drawn By Yusein Ali	Document Name SensWear-Main.SchDoc			
Approved By Dariush Salami	Rev. B0	Sheet 1 of 8	Size A4	
		Date 01.03.2026		

---
nRF54L15 PERIPHERAL PIN ASSIGNMENTS

[UART] - Instance: UART30 (Peripheral Domain)
RXD : P0.03 (Input)
TXD : P0.04 (Output)
NOTE: P0.03 and P0.04 are valid P0 digital I/O pins and should be used with UARTE30.

[SPI MASTER] - Instance: SPIM00 (MCU Domain - High Speed)
SCK : P2.01
MOSI : P2.02 (Dedicated IO0 Pad)
MISO : P2.04 (Dedicated IO1 Pad)
NOTE : These pins utilize dedicated hardware muxing.
Do not swap MOSI/MISO on these pins.

[I2C MASTER] - Instance: TWIM20 (Peripheral Domain)
SDA : P1.02
SCL : P1.03
REQ : External Pull-up Resistors required.

I2C ADDRESS TABLE (I2C21)
SDA: P1.02 | SCL: P1.03

Device Type	Part Number	Hex (7-bit)	Binary (8-bit with R/W=x)
Buck Converter	TPSM831021	0x68	0100 001x
Touch Controller	MTCH6102	0x25	0100 101x
LED Driver	LP5562	0x30	0110 000x
Temp Sensor	MAX30208	0x50	1010 000x
Fuel Gauge	BQ27427	0x55	1010 101x
Pulse Oximeter	MAX30101	0x57	1010 111x
Haptic Driver	DRV2605L	0x5A	1011 010x
Battery Charger	BQ25180	0x6A	1101 010x

NOTE: 'x' = 0 for WRITE, 1 for READ.
Ensure 1.5k pull-ups on SDA/SCL lines.

SENSOR INTERFACE (GENERIC)
Logic Level: 1.8V (V_REG_IO Domain)

[SHARED CONTROL BUS]
Interface : I2C (I2C21)
SDA : P1.02 (Pin 3)
SCL : P1.03 (Pin 4)
Pull-ups : 1.5kΩ to 1V8 (R15, R16) installed on board.
Note : P1.02 and P1.03 are NFC pins by default.
Disable NFC since these pins are used as I2C GPIO.

[SENSOR GPIOs / ANALOG INPUTS]
GPIO_0 : P1.14 / AIN7 (Pin 42)
- Capable of Analog Input (SAADC).
GPIO_1 : P1.13 / AIN6 (Pin 41)
- Capable of Analog Input (SAADC).
GPIO_2 : P1.12 / AIN5 (Pin 40)
- Capable of Analog Input (SAADC).
GPIO_3 : P2.11 / AIN4 (Pin 39)
- Capable of analog input (SAADC).

[POWER DOMAIN]
Supply : V_REG_IO (Switched Rail)
Control : V_REG_EN (P1.06) must be HIGH.
Note : Ensure sensors connected to these GPIOs are powered by V_REG_IO to avoid leakage currents when the sensor subsystem is OFF.

MCU (nRF54L15)DEBUG & DIAGNOSTIC INTERFACE
Logic Level: 1.8V (VDD_IO)

[SWD PROGRAMMING]
SWDIO : SWDIO (Physical Pin 25)
- Bidirectional Data line.
- Has internal pull-up.
SWDCLK : SWDCLK (Physical Pin 26)
- Clock input from debugger.
- Has internal pull-down.
RESET# : nRESET (Physical Pin 30)
- Active Low System Reset.
- Mandatory for device recovery (un-bricking).

[UART CONSOLE] - Instance: UART30
MCU_RX : P0.03 (Pin 28)
- Input to nRF54. Connect to Debugger TX.
MCU_TX : P0.04 (Pin 29)
- Output from nRF54. Connect to Debugger RX.
NOTE:
P0.03 also has GRTC PWM functionality.
P0.04 also has GRTC CLKOUT32K functionality.
Do not enable those GRTC functions while using these pins for UART.

[LAYOUT REQUIREMENTS]
1. Debug connector VREF/VTref must be connected to 1V8.
2. Debug probe / USB-UART must support 1.8V target I/O.
3. Do not place large capacitors on SWDIO or SWDCLK.
4. Keep SWDIO, SWDCLK, RESET#, UART_TX, and UART_RX short and clean.
5. UART_TX and UART_RX are single-ended signals, not differential pairs.
6. Provide a solid common GND between the debug board and the target board.

[DEBUG BOARD CONNECTION]
Connect the debug-board connector to:
- 1V8 / VREF
- GND
- SWDIO
- SWDCLK
- RESET#
- MCU_TX
- MCU_RX

[USAGE]
- Use SWD for programming and debugging.
- Use USB Type-C on the debug board for UART console/debug messages.

[CRYSTAL X2 NOTE]
Type: 32.768 kHz (CL=12.5pF)
Caps: INTERNAL (Firmware Enabled).
Do NOT place external capacitors.

```
&lfxo {
  status = "okay";
  load-capacitors = "internal";
  /* * Calculation for 12.5pF Crystal:
   * C_pin = 2 * (C_load - C_stray)
   * C_pin = 2 * (12.5pF - 4pF) = 17pF
   */
  load-capacitance-femtofarad = <17000>;
};
```

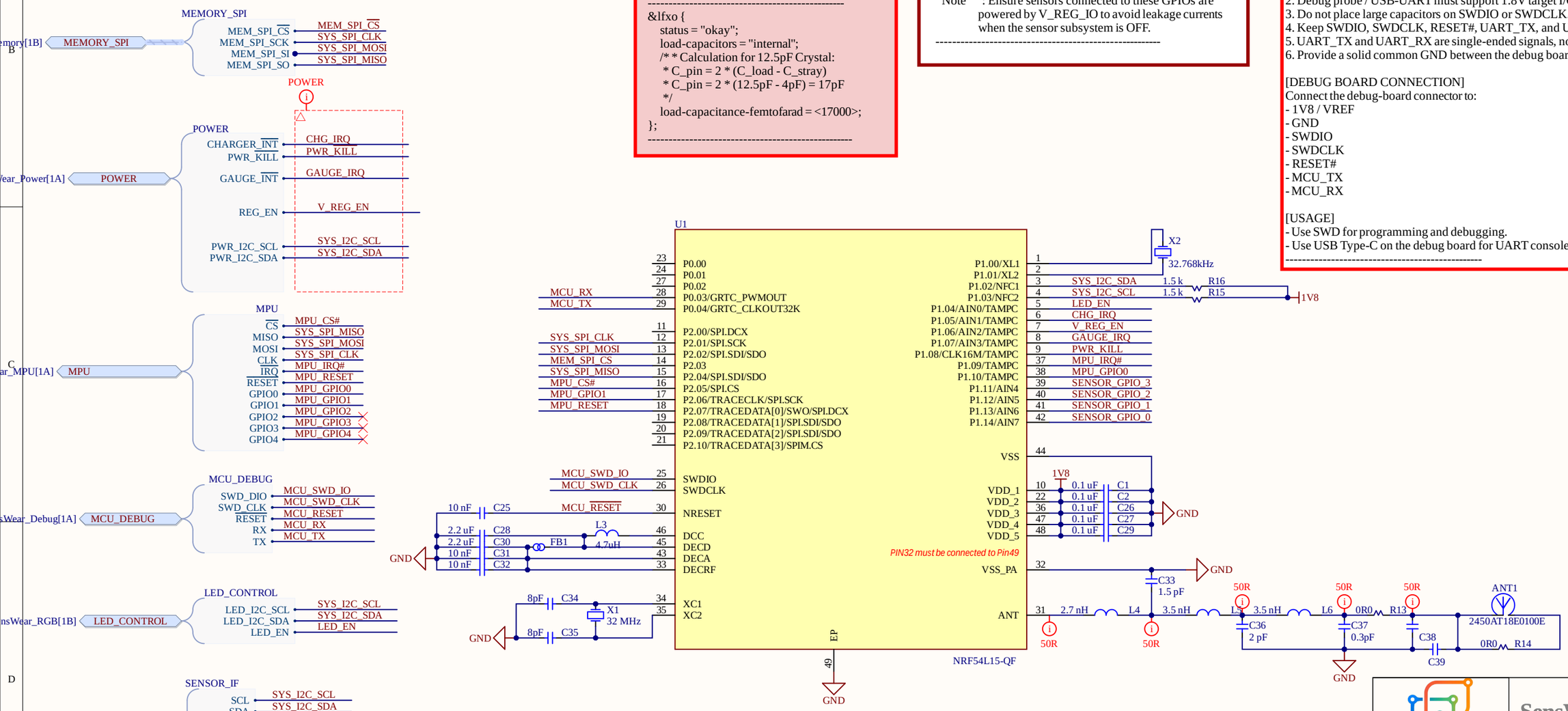

Designer/Engineer: Yusein Ali	Board Title: SensWear-Hub
Drawn By: Yusein Ali	Document Name: SensWear_MCU.SchDoc
Approved By: Dariush Salami	Rev. B0 · Sheet 2 of 8 · Size A3 · Date 01.03.2026

SensWear-V1R1

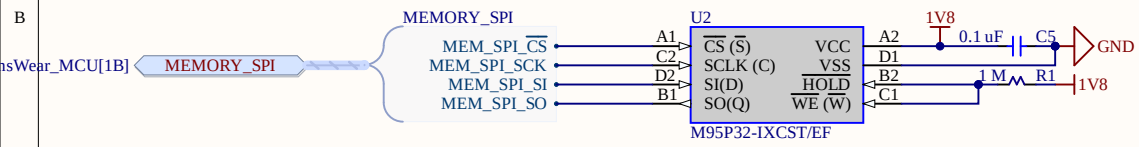

EXTERNAL MEMORY (EEPROM) USAGE NOTES
Part: M95P32-IXCST (STMicroelectronics)
Logic Level: 1.8V

[1. INTERFACE CONFIGURATION]
Protocol : SPI
Instance : SPIM00 (Shared Bus on Port 2)
Max Speed: 80 MHz (Device limit) / 32 MHz (MCU limit)
Mode : CPOL=0, CPHA=0 (Mode 0)
Bit order: MSB first

[2. PIN MAPPING]

Signal	nRF Pin	Mem Pin	Function
SPI SCK	P2.01	Pin C2	Serial Clock
SPI MOSI	P2.02	Pin D2	Serial Data In (SI)
SPI MISO	P2.04	Pin B1	Serial Data Out (SO)
MEM_CS#	P2.03	Pin A2	Chip Select (Active Low)

[3. HARDWARE CONFIGURATION]
HOLD# (Pin B2) : Pulled HIGH (1MΩ).
- Device suspend function disabled.
W# (Pin C1) : Pulled HIGH (1MΩ).
- Hardware Write Protection disabled.
- Memory is always writable.

[4. POWER & DECOUPLING]
Supply : 1V8 (Main System Rail).
Cap : 0.1uF (C5) placed near Pin A2/D1.

[5. PAGE WRITE NOTE]
The M95P32 is a Page EEPROM.
- Page Size: 512 Bytes.
- Unlike standard EEPROMs, it supports very fast Page Write and Buffer Load instructions.

SensWear-V1R1			
Designer/Engineer: Yusein Ali	Board Title: SensWear-Hub		
Drawn By: Yusein Ali	Document Name: SensWear_Memory.SchDoc		
Approved By: Dariush Salami	Rev. B0	Sheet 3 of 8	Size A4
		Date 01.03.2026	

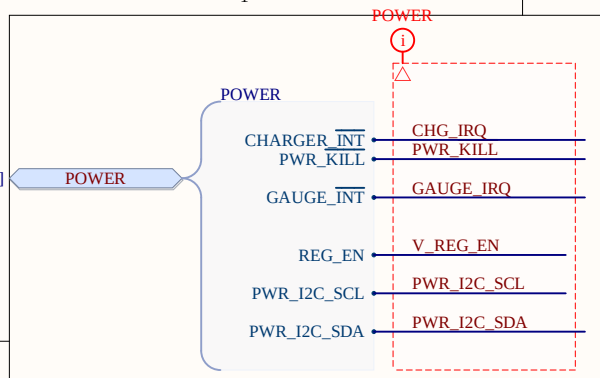

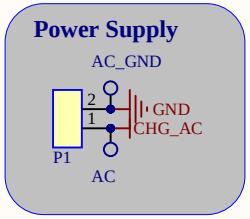

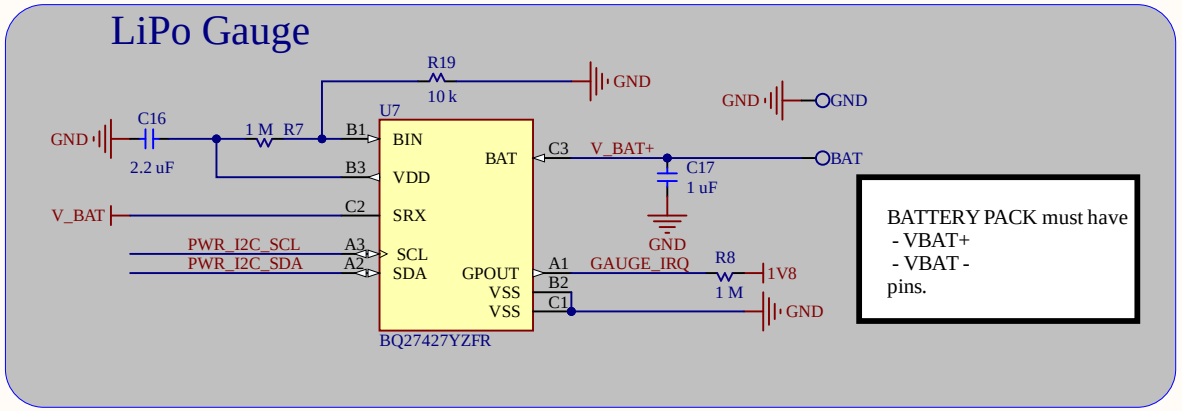

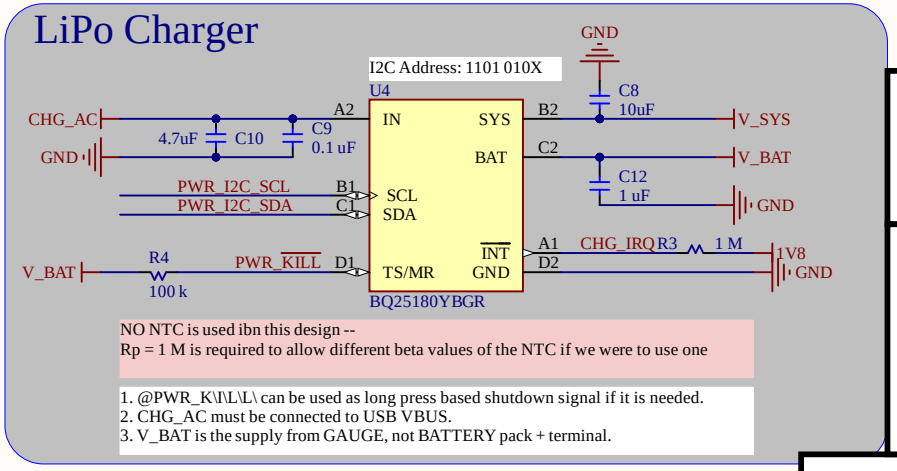

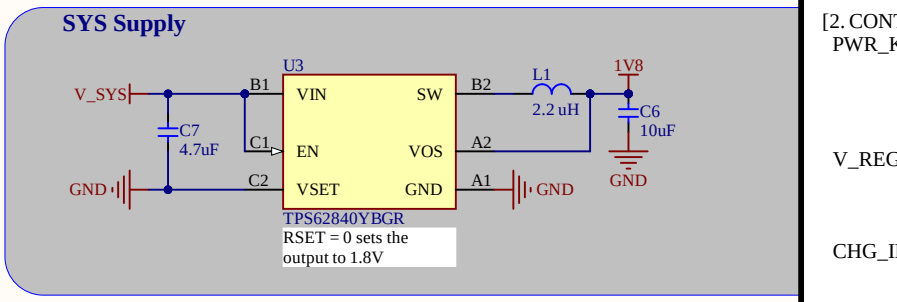

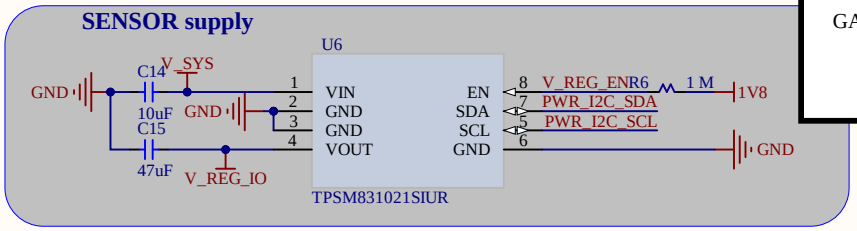

SYSTEM POWER SUBSYSTEM USAGE NOTES
Main Logic Level: 1.8V (Net: 1V8)
Control Bus: I2C21 (SDA: P1.02, SCL: P1.03)

[1. POWER RAIL ARCHITECTURE]
V_BAT : Raw LiPo battery voltage.
V_SYS : System power managed by Charger (U4).
Feeds the buck regulators.
1V8 : Main MCU/Logic supply (Fixed 1.8V via U3).
Always ON if V_SYS is present.
V_REG_IO : Auxiliary Sensor supply (via U6).
MCU controlled (see below).

[2. CONTROL & INTERRUPTS - MCU CONNECTIONS]
PWR_KILL (P1.08) : System Shutdown / Ship Mode Control.
Connects to Charger (U4).
- Drive LOW to cut V_SYS output (Power Off).
- Drive HIGH to keep system active.

V_REG_EN (P1.06) : Sensor Regulator (U6) Enable.
- HIGH = Output ON.
- LOW = Output OFF.

CHG_IRQ (P1.05) : Charger Interrupt (Active Low, Open Drain).
Signals charging status changes, faults, etc.

GAUGE_IRQ(P1.07) : Fuel Gauge Interrupt (Active Low, Open Drain).
Signals low battery, state of charge changes.

[3. I2C DEVICE CONFIGURATION (Bus TWIM20)]

Device	Ref	Address (7-bit)	Notes
LiPo Charger	U4	0x6A (Fixed)	BQ25180. No NTC used.
LiPo Fuel Gauge	U7	0x55 (Fixed)	BQ27427. Low-side sensing.
Sensor Regulator	U6	0x68 (Fixed)	TPSM831021. Vout set via I2C.

[4. CRITICAL HARDWARE NOTES]
- BATTERY CONN : Design uses Low-Side sensing (R7).
Battery connector MUST have separate
PACK- and PACK+ terminals routed to U7.
- NTC THERM : Not used in this design. Charger configured
to ignore TS pin (check R4/R1 resistors).

SensWear-V1R1			
Designer/Engineer: Yusein Ali	Board Title: SensWear-Hub		
Drawn By: Yusein Ali	Document Name: SensWear_Power.SchDoc		
Approved By: Dariush Salami	Rev. B0	Sheet 4 of 8	Size A4
		Date 01.03.2026	

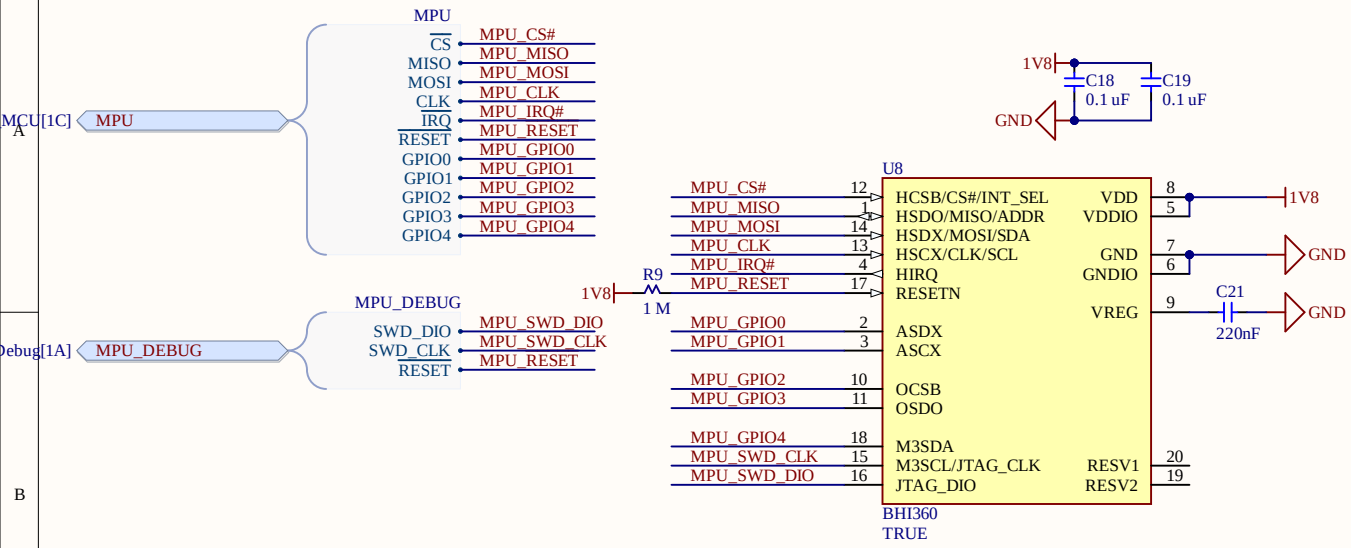

BHI360 SENSOR DEBUGGING (JTAG)
Interface: 2-Wire JTAG (Compact JTAG)
Logic Level: 1.8V

[HARDWARE CONNECTION]
Connector: P2 (10-pin Debug Header)

Pin 9 : JTAG_DIO (Bi-directional Data)
- Net: MPU_SWD_DIO
- Connected to BHI360 Pin 16

Pin 10 : JTAG_CLK (Clock)
- Net: MPU_SWD_CLK
- Connected to BHI360 Pin 15

Pin 8 : RESET# (Active Low)
- Net: MPU_RESET
- Connected to BHI360 Pin 17

[CRITICAL SAFETY NOTE]
The MPU_RESET line is shared with the nRF54 MCU (Pin P2.07).

BEFORE connecting a JTAG debugger to the sensor:
1. The nRF54 firmware MUST configure P2.07 as a High-Impedance INPUT.
2. If the nRF54 drives this pin HIGH while the debugger pulls it LOW, you risk a short circuit damaging the MCU or Sensor.

[DEBUGGER SETTINGS]
Target Device : Bosch BHI360 (ARC EM4 Core)
Protocol : cJTAG (Compact JTAG / 2-wire)
Speed : 1 MHz - 4 MHz (Recommend starting slow)

MOTION SENSOR (BHI360) USAGE NOTES
Logic Level: 1.8V (VDD_1 / 1V8)

[1. INTERFACE CONFIGURATION]
Protocol : SPI (4-Wire)
Instance : SPI00 (High-Speed Port 2 Domain)
Speed : Up to 20 MHz supported (Init @ 2 MHz recommended)
Mode : CPOL=0, CPHA=0 (Mode 0) or Mode 3

[2. PIN MAPPING (nRF54 <-> BHI360)]

Signal	nRF Pin	BHI Pin	Function
SPI SCK	P2.01	Pin 13	Serial Clock
SPI MOSI	P2.02	Pin 14	Master Out / Slave In
SPI MISO	P2.04	Pin 1	Master In / Slave Out
MPU_CS#	P2.05	Pin 12	Chip Select (Active Low)
MPU_IRQ#	P1.09	Pin 4	Host Interrupt (Active Low)
MPU_RESET	P2.07	Pin 17	Reset (Active Low)

[3. AUXILIARY GPIOs]
MPU_GPIO0 P1.10 Pin 2 (Programmable)
MPU_GPIO1 P2.06 Pin 3 (Programmable)

MOTION SENSOR (BHI360) USAGE NOTES
Logic Level: 1.8V (VDD_1 / 1V8)

[4. BOOT & FIRMWARE LOAD SEQUENCE]
1. Power On: 1V8 Rail stable.
2. Reset: Pulse MPU_RESET (P2.07) LOW for >10us, then HIGH.
3. Wait: Delay 2ms for internal BHI boot.
4. Detect: Read 'Host Interface Control' register.
5. Upload: Burst write firmware RAM patch over SPI. (Sensor does not function without this RAM patch).

[5. DEBUG NOTE]
JTAG Pins (15/16) are routed to the debug connector.
They are NOT connected to the nRF54 MCU.

SensWear-V1R1			
Designer/Engineer: Yusein Ali	Board Title: SensWear-Hub		
Drawn By: Yusein Ali	Document Name: SensWear_MPU.SchDoc		
Approved By: Dariush Salami	Rev. B0	Sheet 5 of 8	Size A4
		Date 01.03.2026	

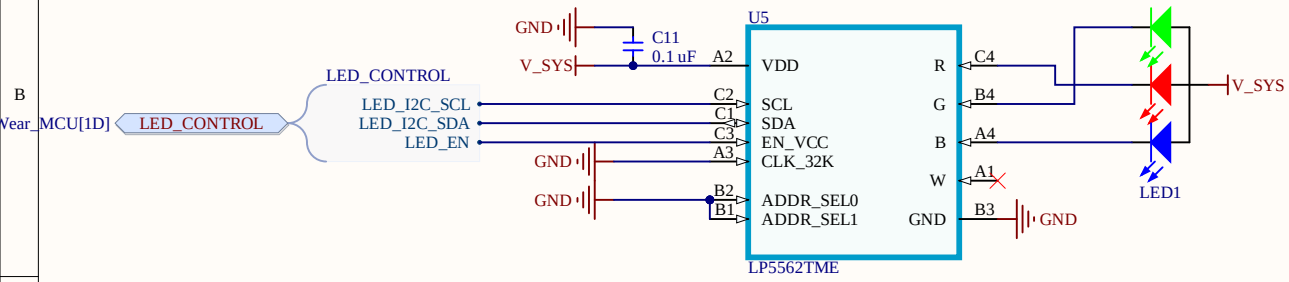

I2C Address: 0110 000x

RGBW LED DRIVER (LP5562)
Logic Level: 1.8V

[CONTROL INTERFACE]
I2C Addr : 0x30 (7-bit)
(Requires A1=GND, A0=GND)
Bus : I2C21 (SDA: P1.02, SCL: P1.03)

[HARDWARE ENABLE]
LED_EN : P1.04 (Pin 17 on nRF54)
Polarity : Active HIGH.

CRITICAL FIRMWARE NOTE:
1. Set P1.04 HIGH.
2. Wait 500µs (T_startup).
3. ONLY THEN attempt I2C communication.
(Chip ignores I2C when EN is Low).

[OUTPUT CHANNELS]
Type : Current Sinks (Connect LED Cathodes to pins).
R, G, B : Programmable (PWM or Pattern Engine).
W (White): Direct PWM control (often used for status).

[POWER SAVE]
To enter absolute lowest power (Shutdown):
Drive LED_EN (P1.04) -> LOW.

	SensWear-V1R1			
Designer/Engineer Yusein Ali	Board Title SensWear-Hub			
Drawn By Yusein Ali	Document Name SensWear_RGB.SchDoc			
Approved By Dariush Salami	Rev. B0	Sheet 6 of 8	Size A4	
		Date 01.03.2026		

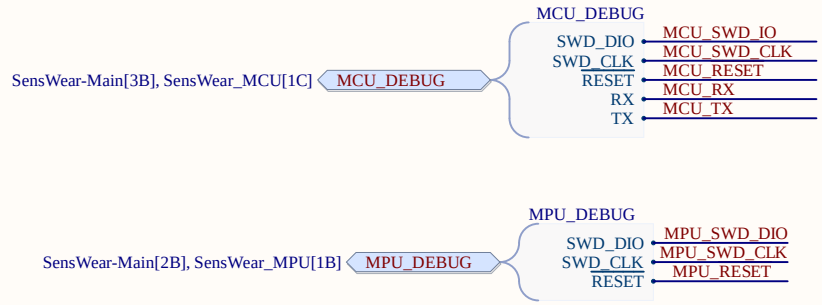

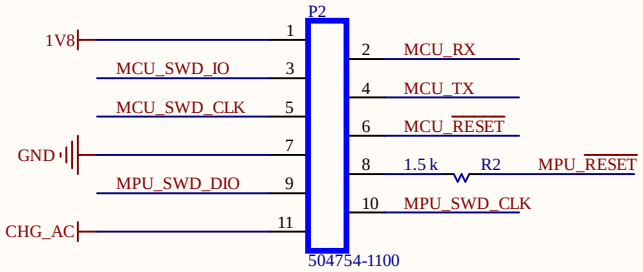

RESET LINE PROTECTION (MPU_RESET)

Component : Resistor (Series)
Value : 1.5kΩ
Location : Series between nRF54 Pin P2.07 and the Debug Connector (Pin 8).
Function : - Prevents short-circuit damage if nRF54 accidentally drives line HIGH while Debugger drives LOW.
- Current limited to ~1.2mA.

MPU DEBUG INTERFACE (BHI360)
Logic Level: 1.8V (VDDIO)

[JTAG / SWD CONNECTION] - Connector P2
MPU_SWD_DIO : Pin 9
- Connected to BHI360 Pin 16 (JTAG_DIO)
- Bi-directional Data
MPU_SWD_CLK : Pin 10
- Connected to BHI360 Pin 15 (JTAG_CLK)
- Clock Input
MPU_RESET# : Pin 8
- Active Low Reset
- Connected to BHI360 Pin 17 (RESETN)

[CRITICAL RESET NOTE]
The line 'MPU_RESET' is shared between:
1. External Debug Connector (Pin 8)
2. nRF54 MCU Pin P2.07 (Pin 7 on U1)

WARNING: To debug the BHI360 via Connector P2, the nRF54 MCU must configure P2.07 as INPUT (High-Z) to avoid driving the line HIGH while the debugger tries to pull it LOW.

[DEBUGGER COMPATIBILITY]
Target Core : ARC EM4 (Fuser Core)
Interface : 2-Wire JTAG/SWD

MCU (nRF54L15)DEBUG & DIAGNOSTIC INTERFACE
Logic Level: 1.8V (VDD_IO)

[SWD PROGRAMMING]
SWDIO : SWDIO (Physical Pin 25)
- Bidirectional Data line.
- Has internal pull-up.
SWDCLK : SWDCLK (Physical Pin 26)
- Clock input from debugger.
- Has internal pull-down.
RESET# : nRESET (Physical Pin 30)
- Active Low System Reset.
- Mandatory for device recovery (un-bricking).

[UART CONSOLE] - Instance: UART30
MCU_RX : P0.03 (Pin 28)
- Input to nRF54. Connect to Debugger TX.
MCU_TX : P0.04 (Pin 29)
- Output from nRF54. Connect to Debugger RX.
NOTE:
P0.03 also has GRTC PWM functionality.
P0.04 also has GRTC CLKOUT32K functionality.
Do not enable those GRTC functions while using these pins for UART.

[LAYOUT REQUIREMENTS]
1. Debug connector VREF/VTref must be connected to 1V8.
2. Debug probe / USB-UART must support 1.8V target I/O.
3. Do not place large capacitors on SWDIO or SWDCLK.
4. Keep SWDIO, SWDCLK, RESET#, UART_TX, and UART_RX short and clean.
5. UART_TX and UART_RX are single-ended signals, not differential pairs.
6. Provide a solid common GND between the debug board and the target board.

[DEBUG BOARD CONNECTION]
Connect the debug-board connector to:
- 1V8 / VREF
- GND
- SWDIO
- SWDCLK
- RESET#
- MCU_TX
- MCU_RX

[USAGE]
- Use SWD for programming and debugging.
- Use USB Type-C on the debug board for UART console/debug messages.

	SensWear-V1R1			
Designer/Engineer Yusein Ali	Board Title SensWear-Hub			
Drawn By Yusein Ali	Document Name SensWear_Debug.SchDoc			
Approved By Dariush Salami	Rev. B0	Sheet 7 of 8	Size A4	
		Date 01.03.2026		

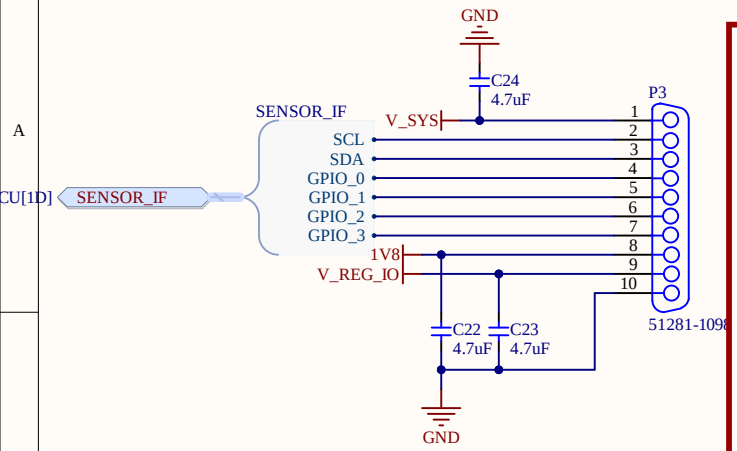

SENSOR POWER REGULATOR (U6)
Part: TPSM831021SIUR

[HARDWARE CONFIGURATION]
Input : V_SYS (System Voltage)
Output : V_REG_IO (Sensor Logic Supply)
I2C Addr : 0x68 (7-bit)
(Factory programmed, VOUT configurable)

[CONTROL LOGIC]
ENABLE : V_REG_EN (P1.06)
- Active HIGH.
- Drive HIGH to power on sensors.
- Drive LOW to save power (0.1uA shutdown).

[FIRMWARE SEQUENCE]
1. Set P1.06 HIGH.
2. Wait 2ms (Soft-start time).
3. Initialize I2C sensors on the V_REG_IO rail.

[LAYOUT NOTE]
- 10uF Input Cap (C14) must be close to VIN.
- 47uF Output Cap (C15) must be close to VOUT.

SENSOR INTERFACE (GENERIC)
Logic Level: 1.8V (V_REG_IO Domain)

[SHARED CONTROL BUS]
Interface : I2C (I2C21)
SDA : P1.02 (Pin 3)
SCL : P1.03 (Pin 4)
Pull-ups : 1.5kΩ to 1V8 (R15, R16) installed on board.

[SENSOR GPIOs / ANALOG INPUTS]
GPIO_0 : P1.14 / AIN7 (Pin 42)
- Capable of Analog Input (SAADC).
GPIO_1 : P1.13 / AIN0 (Pin 41)
- Capable of Analog Input (SAADC).
GPIO_2 : P1.12 / AIN1 (Pin 40)
- Capable of Analog Input (SAADC).
GPIO_3 : P2.11 (Pin 39)
- Capable of Analog Input (SAADC).

[POWER DOMAIN]
Supply : V_REG_IO (Switched Rail)
Control : V_REG_EN (P1.06) must be HIGH.
Note : Ensure sensors connected to these GPIOs are powered by V_REG_IO to avoid leakage currents when the sensor subsystem is OFF.

	SensWear-V1R1		
Designer/Engineer Yusein Ali	Board Title SensWear-Hub		
Drawn By Yusein Ali	Document Name SensWear_DaughterBoard.SchDoc		
Approved By Dariush Salami	Rev. B0	Sheet 8 of 8	Size A4
		Date 01.03.2026	

View from Top side (Scale 5:1)

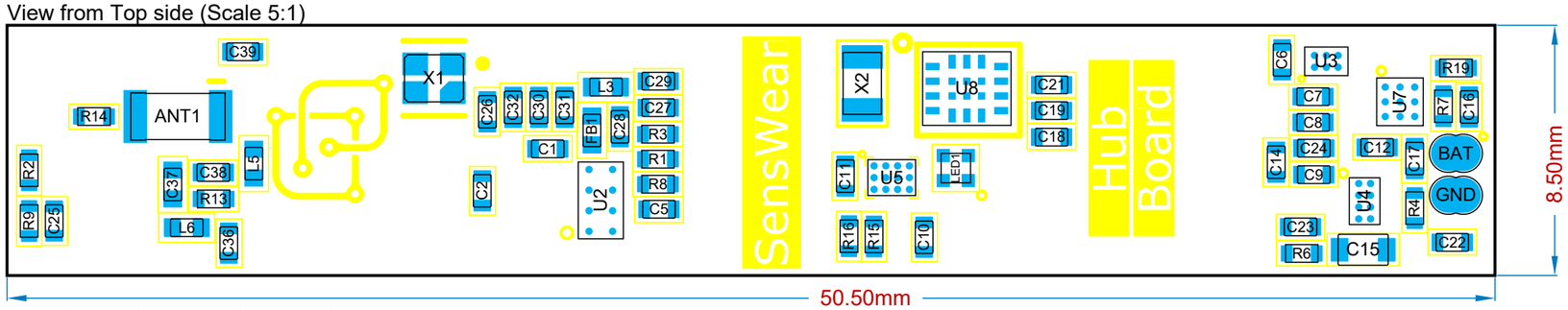

View from Bottom side (Scale 5:1)

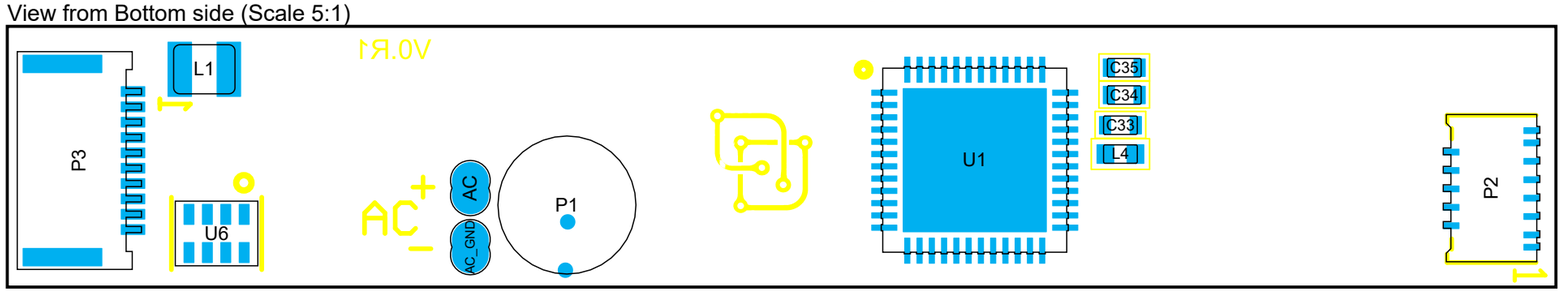

Bill Of Materials

Line #	Designator	Comment	Quantity
1	ANT1	2450AT18E0100E	1
2	C1, C2, C5, C9, C11, C18, C19, C26, C27, C29	0.1 uF	10
3	C6, C8, C14	10uF	3
4	C7, C10, C22, C23, C24	4.7uF	5
5	C12, C17	1 uF	2
6	C15	47uF	1
7	C16, C28, C30	2.2 uF	3
8	C21	220nF	1
9	C25, C31, C32	10 nF	3
10	C33	1.5 pF	1
11	C34, C35	8pF	2
12	C36	2 pF	1
13	C37	0.3pF	1
14	C38, C39	NC	2
15	FB1	BLM15AG121SN1D	1
16	L1	2.2 uH	1
17	L3	4.7uH	1
18	L4	2.7 nH	1
19	L5, L6	3.5 nH	2

Bill Of Materials

Line #	Designator	Comment	Quantity
20	LED1	SML-LX0404SIUPGUSB	1
21	P1	RM-1238-B02-41	1
22	P2	504754-1100	1
23	P3	51281-1098	1
24	R1, R3, R6, R7, R8, R9	1 M	6
25	R2, R15, R16	1.5 k	3
26	R4	100 k	1
27	R13, R14	0R0	2
28	R19	10 k	1
29	U1	NRF54L15-QF	1
30	U2	M95P32-IXCST/EF	1
31	U3	TPS62840YBGR	1
32	U4	BQ25180YBGR	1
33	U5	LP5562TME	1
34	U6	TPSM831021SIUR	1
35	U7	BQ27427YZFR	1
36	U8	BHI360	1
37	X1	32 MHz	1
38	X2	32.768kHz	1

SensWear-V1R1

Designer/Engineer	Board Title		
Yusein Ali	SensWear-Hub		
Drawn By	**Document Name**		
Yusein Ali	SensWear-Hub-assembly.PCBDwf		
Approved By	**Ver.**	**Rev.**	**Date**
Dariush Salami	1	B0	01.03.2026