VESTA 2

A Prep profile (666-03-182-00) for painting

Please refer to diagram 1.1

1. Cut extrusion to desire length,22. 5” (board length) x # of boards required for specified length, +3” (for 1.5” gap on each side), sample length 10’
   ***NOTE:** Inspect pieces for damage, dents and bents.

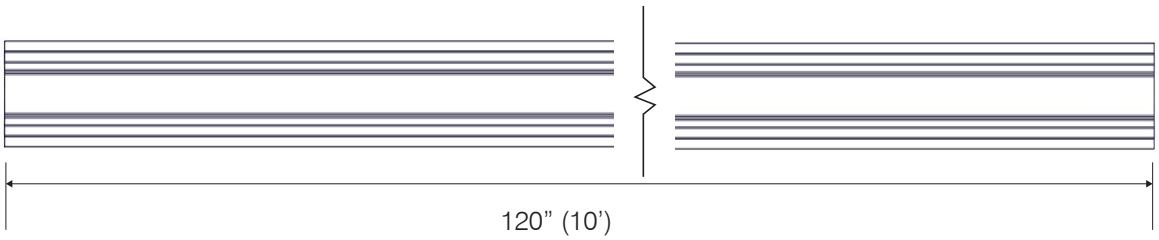

2. Drill 2 holes for cable gripper, **drill channel to clear for base of gripper**, test to fit, install junction box (666-02-082-02) on top of profile and mark location center hole.

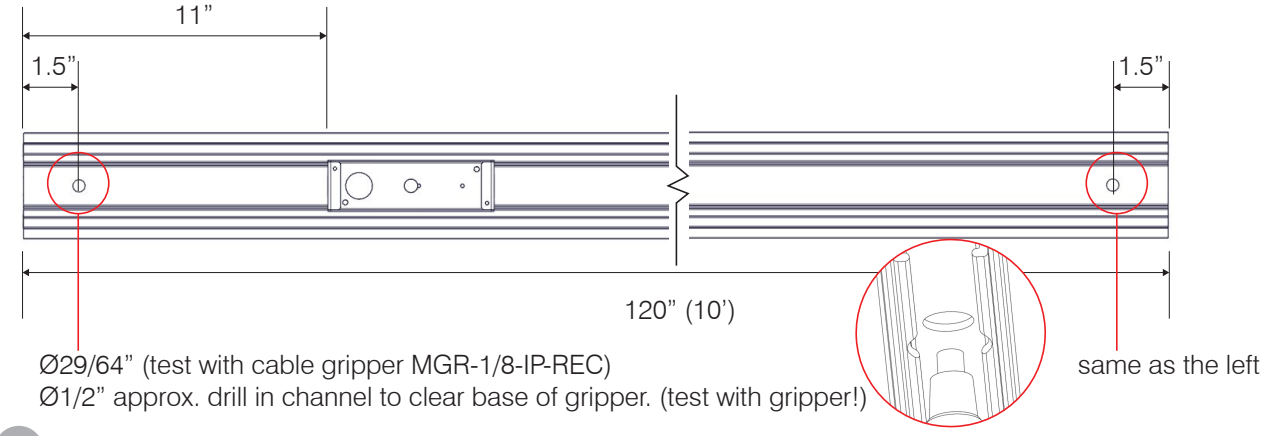

3. Drill 1/2” hole through center of junction box and into extrusion.

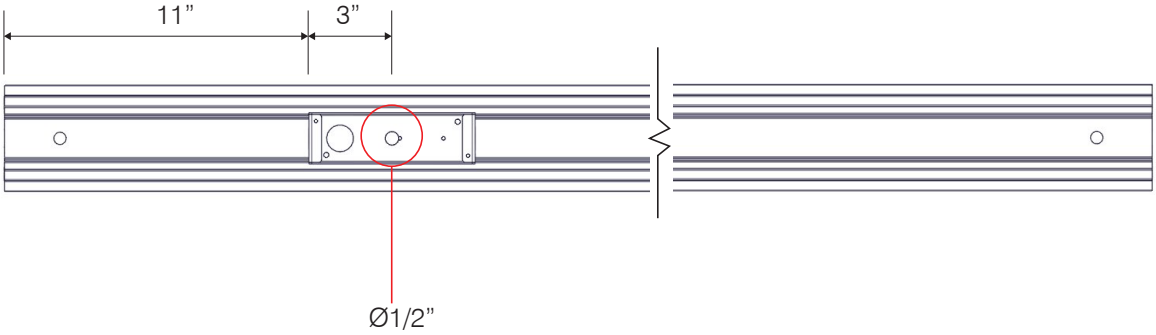

4. Remove junction box, de-burr all holes and edges, and send off to paint.

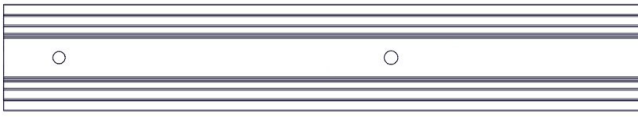

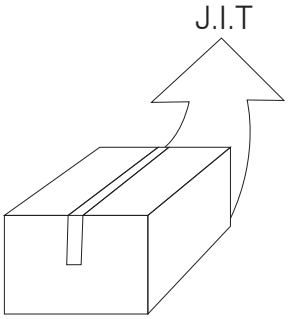

SENSO
www.sensolighting.com
302 50 Ave SE Calgary Alberta T2G 2A9 Canada • E: info@sensolighting.com • T: 403.216.7043 • F:403.216.7045

B Prep LED base (666-03-0162-00) with LED boards (QC-40SG-24V-2252-35S8)

VESTA 2

1 Cut LED base 4” shorter than profile length to leave 2“ gap on each end. (sample length 116”)

Please refer to diagram 2.1

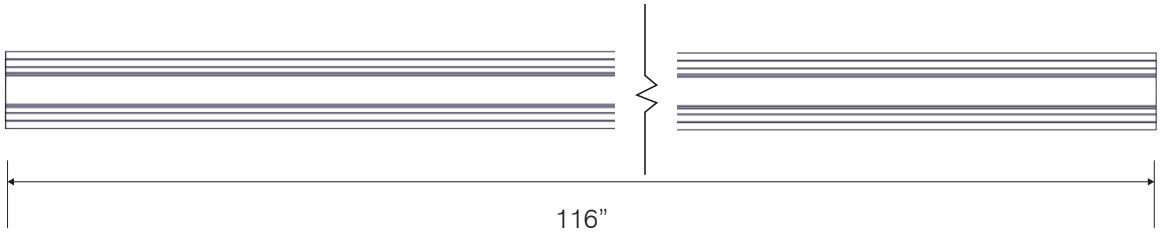

2 Using provided jig, make 1/4” holes on both edges starting 1” from one end and every 16” after that.

Please refer to diagram 2.1

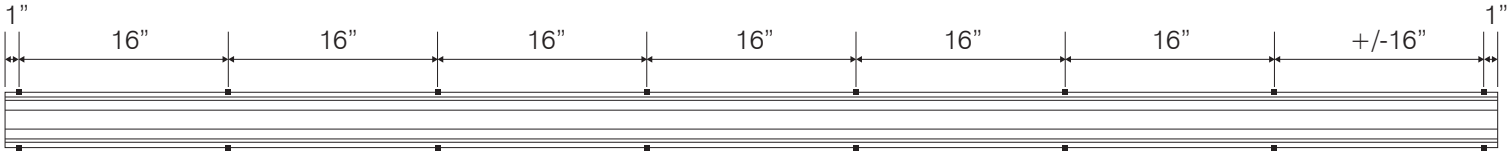

3 Using provided jig, make 1/2” holes at 22.5”, 67.5” and 90” on both edges starting from one end. (This will depend on length and board layout)

Please refer to diagram 2.2

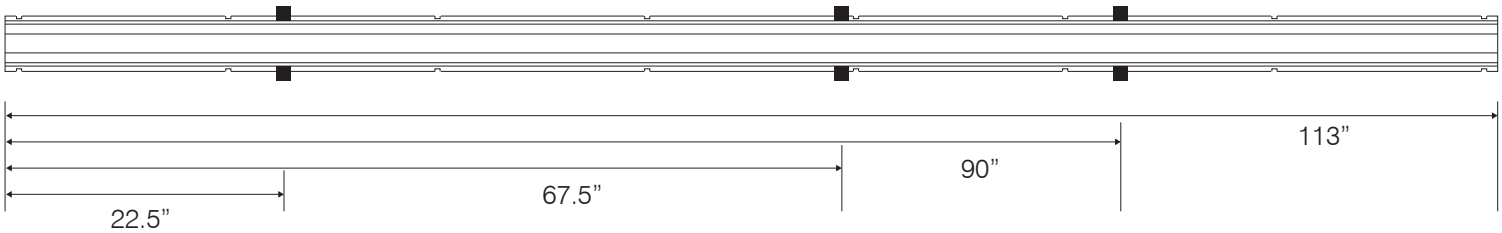

4 Attach tethers (666-02-055) (with eyelet, 2485-0102-1529-2105)) to LED base 24” from both ends, with screws (535-A24-1Y).

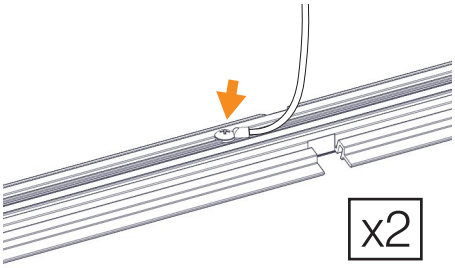

5 Apply thermal paste and mount LED boards onto base with screws (535-A22-1W).

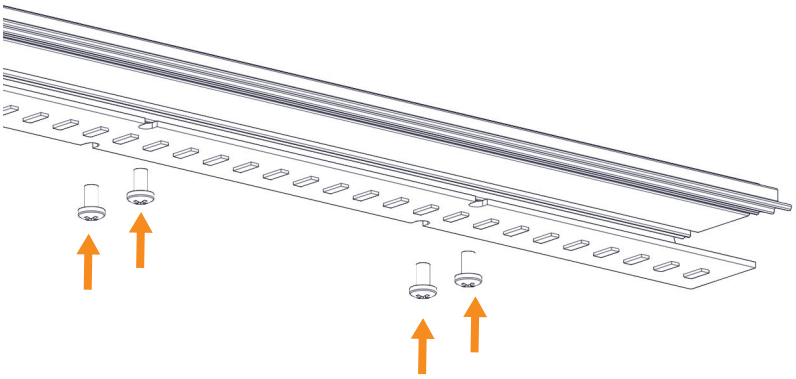

*NOTE: Tighten down LED boards starting from one end to ensure boards lie flat with minimal warping.

**All screws need to be hand tighten to make sure they are all well installed.

SENSO
www.sensolighting.com
302 50 Ave SE Calgary Alberta T2G 2A9 Canada • E: info@sensolighting.com • T: 403.216.7043 • F:403.216.7045

C Assemble fixture

VESTA 2

1. Install cable gripper (MGR-1/8-IP-REC) in designated holes using nut (LN-1/8-IP) and lock washer (672-006ZP)

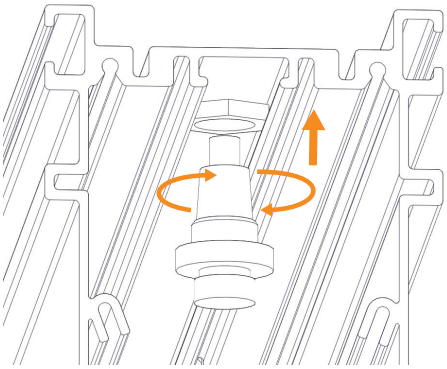

2. Attach junction box (666-02-082-00) and ground wires (777-720) with screws.(535-A24-1Y)

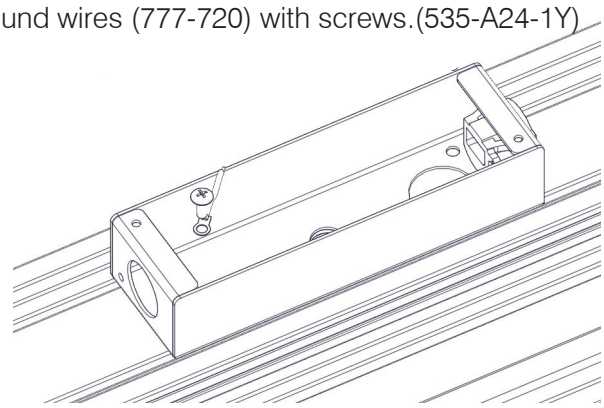

3. Mount drivers inside profile with screws (535-A24-1Y) and #8 lock washer (44-SN), location depend on driver and profile length. Run and connect AC and DC wires. (depend on layout)
***NOTE:** Test fixture for 15-20 mins

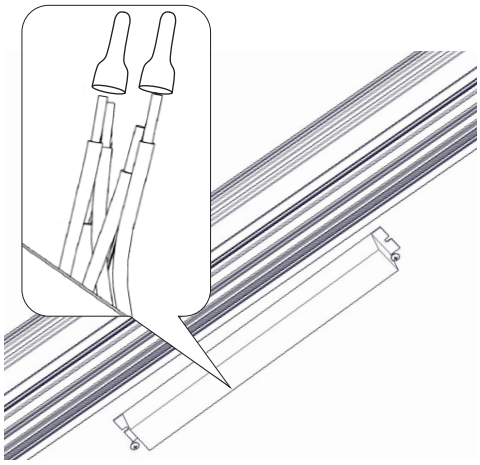

4. Attach junction box lid (666-02-081-00) after wiring is finished.

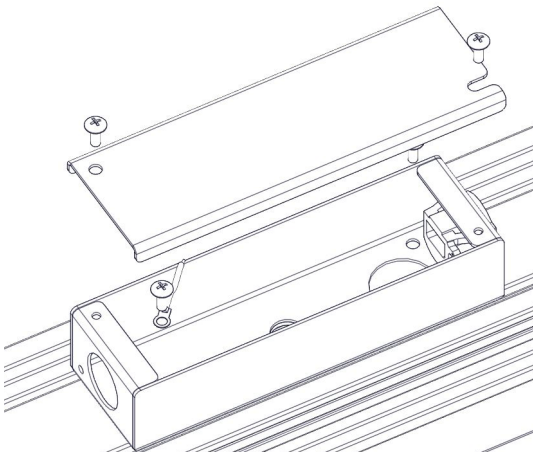

5. Attach tethers to inside of profile with screw (535-A24-1Y) and flat washer. (W-216CP)

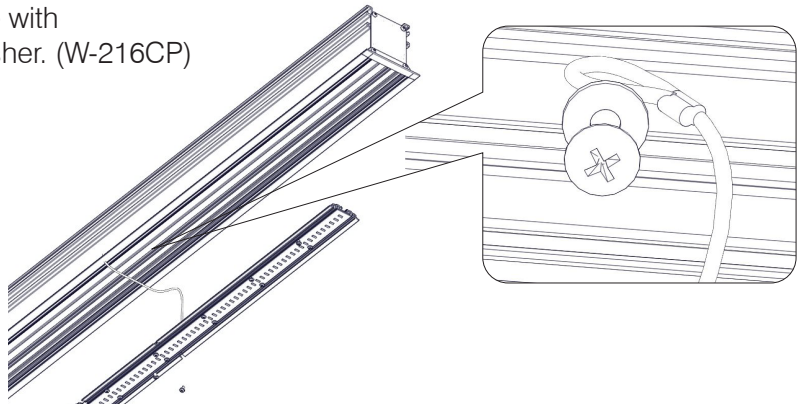

SENSO
www.sensolighting.com
302 50 Ave SE Calgary Alberta T2G 2A9 Canada • E: info@sensolighting.com • T: 403.216.7043 • F:403.216.7045

C Assemble fixture (continue)

VESTA 2

6 Install LED base inside of profile. Tighten screws (535-A24-1Y) starting from one end only while using sample lens piece to ensure proper fit.
***NOTE:** Ensure no wires are caught between LED base and profile.

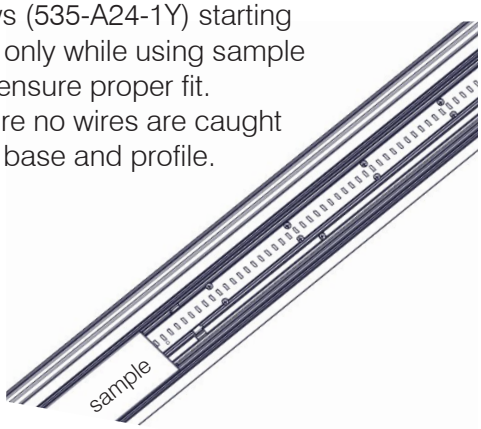

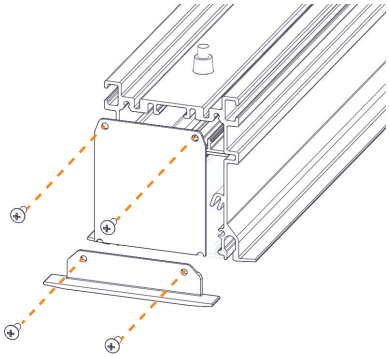

7 Install one end cap plate (666-03-185-00) and cap lip. (666-03-186-00)

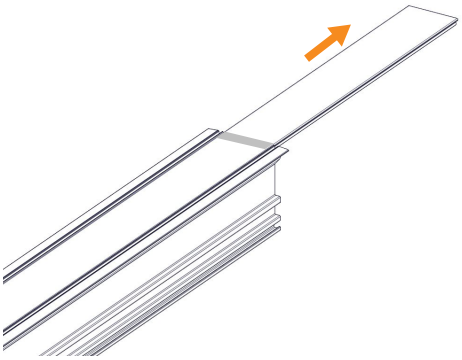

8 insert lens piece (5606-C1N) and mark length with tape. Remove lens, cut to marked length and re-install.
***NOTE:** do not remove blue protective film from lens.

9 Install second end plate and cap.

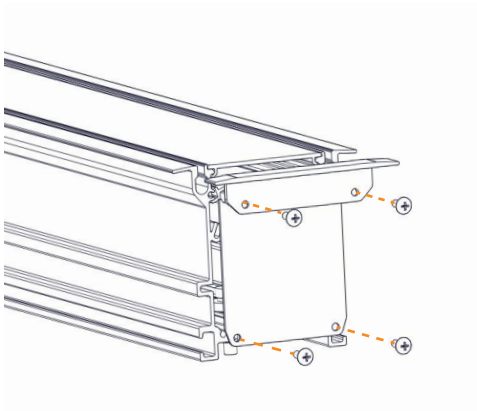

10 Test fixture for at least an hour and TA-DA!

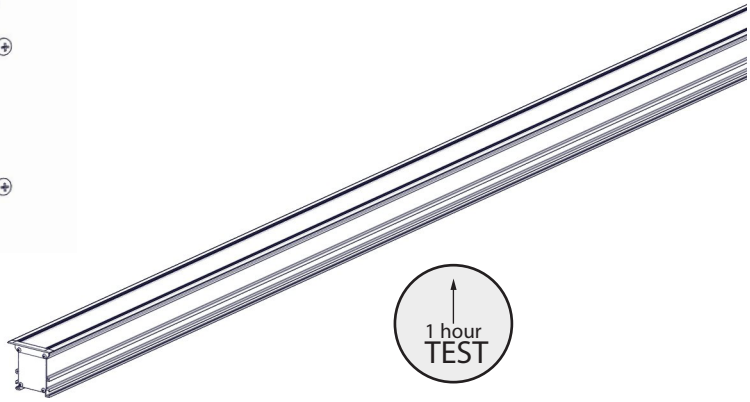

SENSO
www.sensolighting.com
302 50 Ave SE Calgary Alberta T2G 2A9 Canada • E: info@sensolighting.com • T: 403.216.7043 • F:403.216.7045

VESTA 2

Diagram 1.1 VESTA 2 EXTRUSION CUT LENGTH

Ordered length	Actual cut length
2' (24")	25.5"
4' (48")	48"
6' (72")	70.5"
8' (95")	93"
10' (120")	115.5"
12' (144")	138"

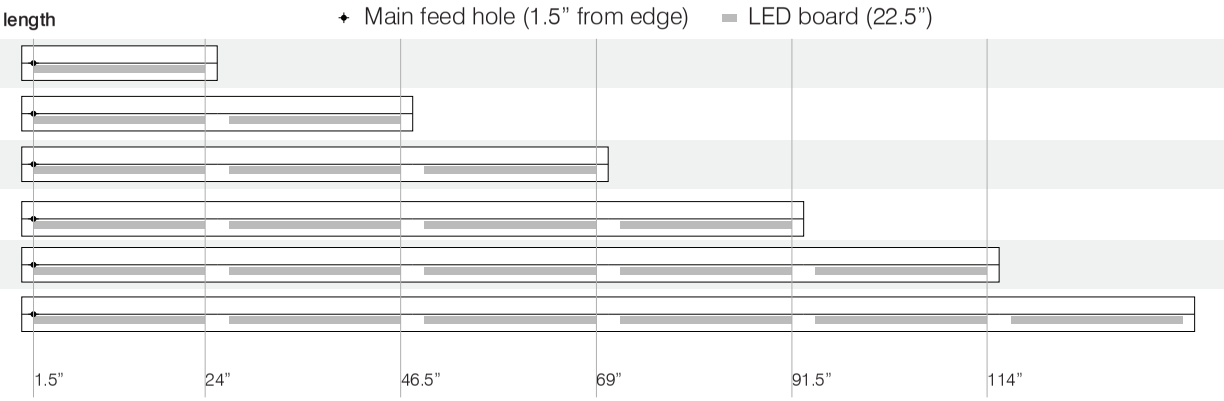

*Lengths are measured from one edge of profile

Diagram 2.1 VESTA LED BASE with screw holes

Ordered length	Base length
2' (24")	22.5"
4' (48")	45"
6' (72")	67.5"
8' (95")	90"
10' (120")	112.5"
12' (144")	135"

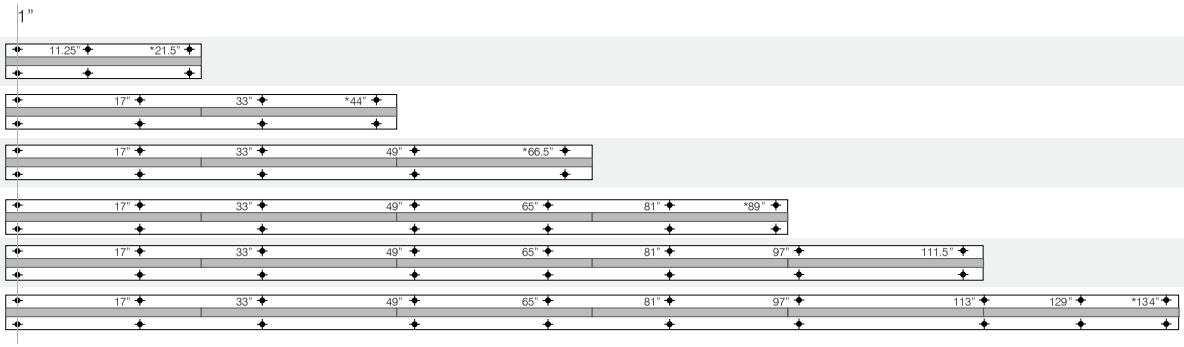

Lengths are measured from one edge of profile
*last hole measures 1" from the end

screw hole (starting 1" from edge)

Diagram 2.2 VESTA LED BASE with feed holes

Ordered length	Base length
2' (24")	22.5"
4' (48")	45"
6' (72")	67.5"
8' (95")	90"
10' (120")	112.5"
12' (144")	135"

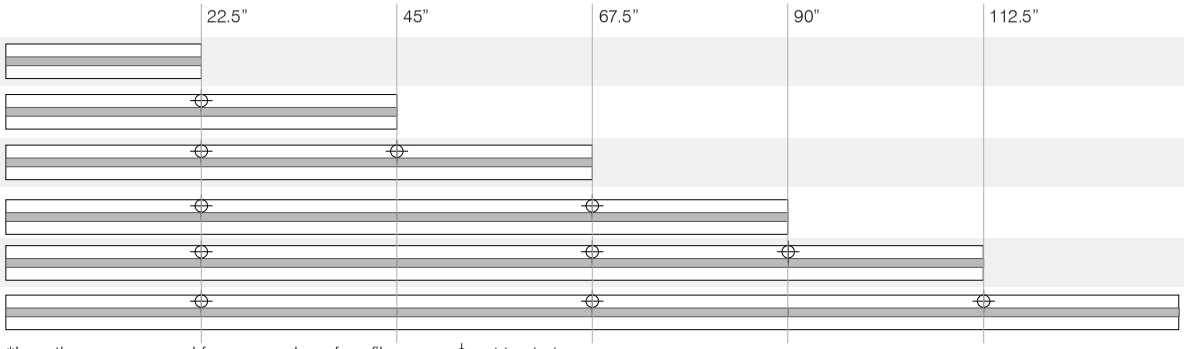

*Lengths are measured from one edge of profile

wiring hole

SENSO
www.sensolighting.com
302 50 Ave SE Calgary Alberta T2G 2A9 Canada • E: info@sensolighting.com • T: 403.216.7043 • F:403.216.7045