A Prep profile (666-03-163-00) for painting

VESTA 1

1. Cut extrusion to desire length, 22.5” (board length) x # of boards required for specified length, +3” (for 1.5” gap on each side), sample length 10’
***NOTE:** Inspect pieces for damage, dents and bents.

For best result, lay on side when cutting.

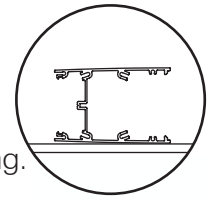

Please refer to diagram 1.1

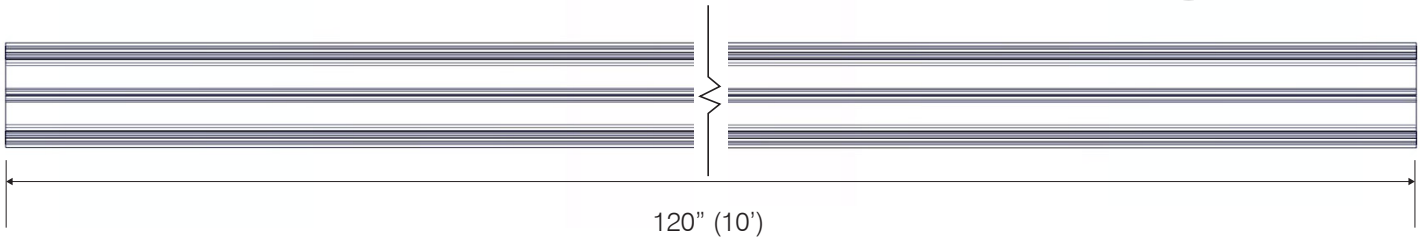

2. Drill a 1/2” hole 1.5” from the edge for feed wire, on one side only.

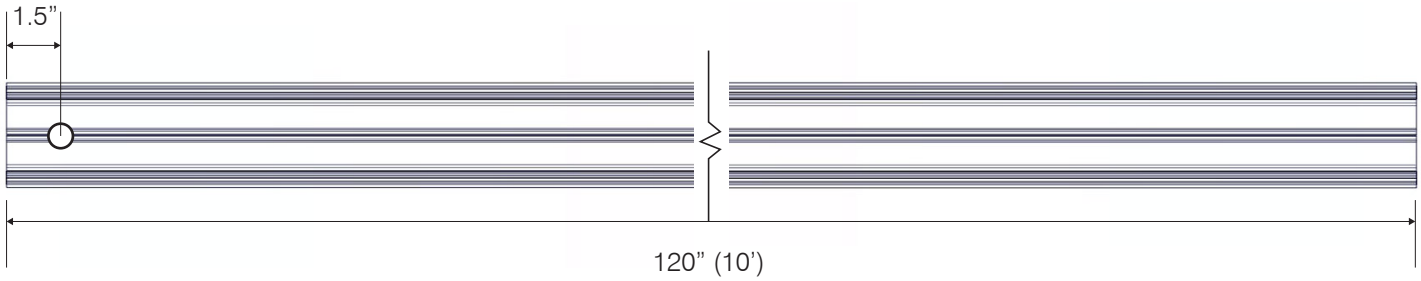

3. Drill 1/2” holes for top feed.

Please refer to diagram 1.1

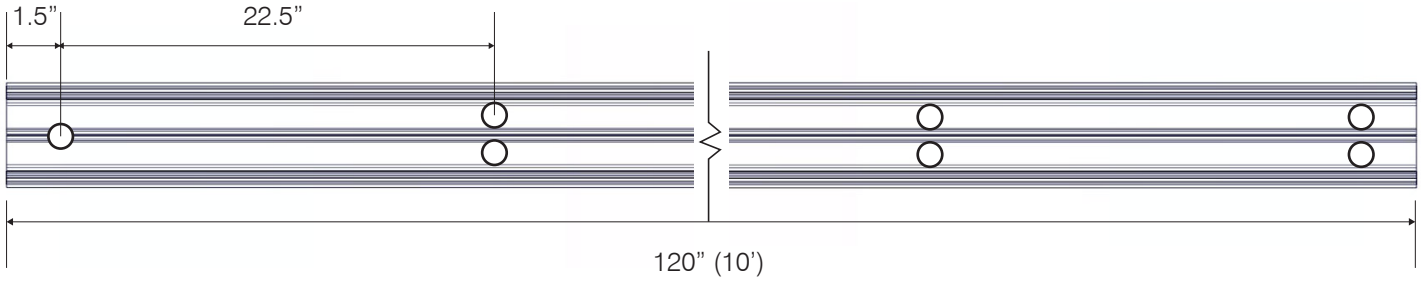

4. De-burr all holes and edges, and send extrusion (666-03-163), end cap (666-03-165), and top plate (666-03-167) off to paint.

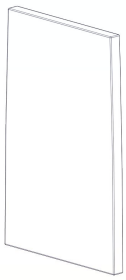

End cap 666-03-165, two per fixture

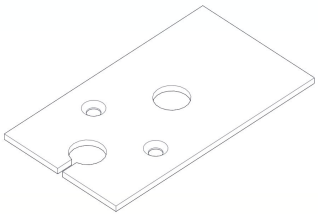

Top plate 666-03-167, two per fixture

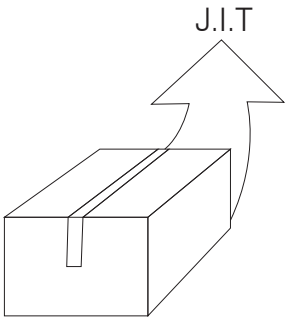

SENSO
www.sensolighting.com
302 50 Ave SE Calgary Alberta T2G 2A9 Canada • E: info@sensolighting.com • T: 403.216.7043 • F:403.216.7045

B Prep LED base (666-03-162-00) with LED boards (QC-40SG-24V-2252-35S8)

VESTA 1

1 Cut LED base 4” shorter than profile length to leave 2“ gap one each end. (sample length 116”)

Please refer to diagram 2.1

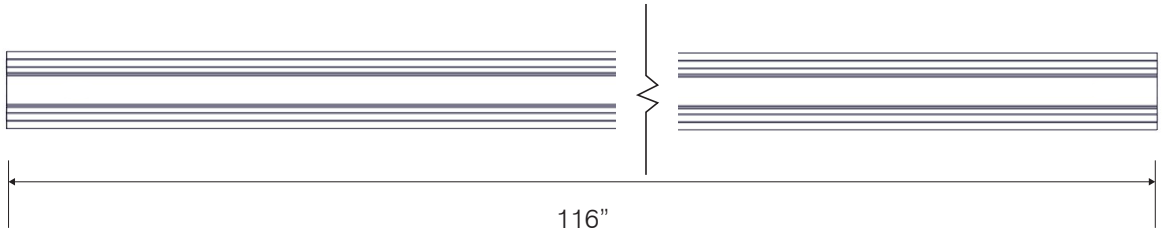

2 Using provided jig, make 1/4” holes on both edges starting 1” from one end and every 16” after that.

Please refer to diagram 2.1

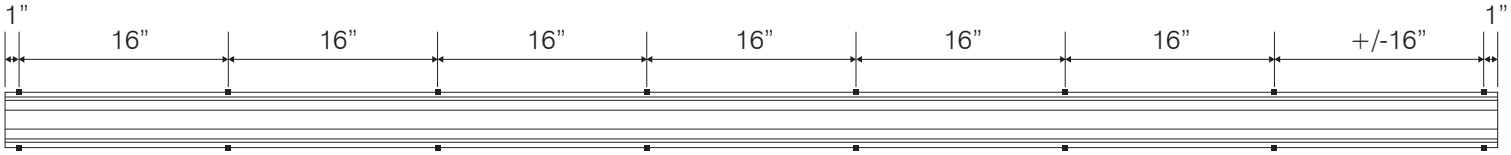

3 Using provided jig, make 1/2” holes at 22.5”, 67.5” and 90” on both edges starting from one end. (This will depend on length and board layout)

Please refer to diagram 2.2

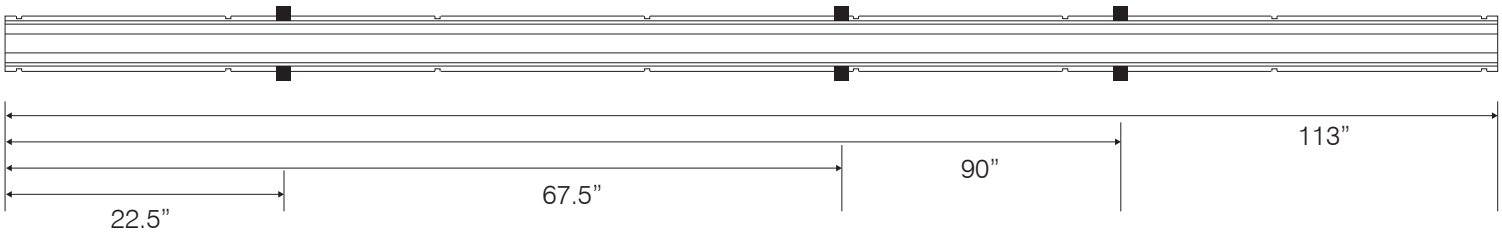

4 Attach tethers (666-02-055) (with eyelet, 2485-0102-1529-2105)) to LED base 24” from both ends, with screws (535-A24-1Y).

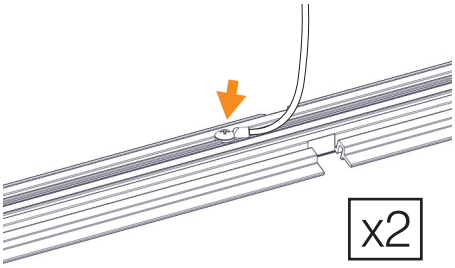

5 Apply thermal paste and mount LED boards onto base with screws (535-A22-1W).

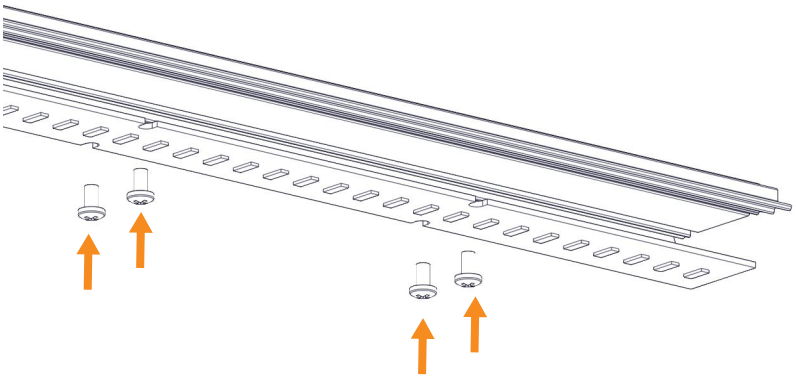

***NOTE:** Tighten down LED boards starting from one end to ensure boards lie flat with minimal warping.

**All screws need to be hand tighten to make sure they are all well installed.

SENSO
www.sensolighting.com
302 50 Ave SE Calgary Alberta T2G 2A9 Canada • E: info@sensolighting.com • T: 403.216.7043 • F:403.216.7045

C Assemble fixture

VESTA 1

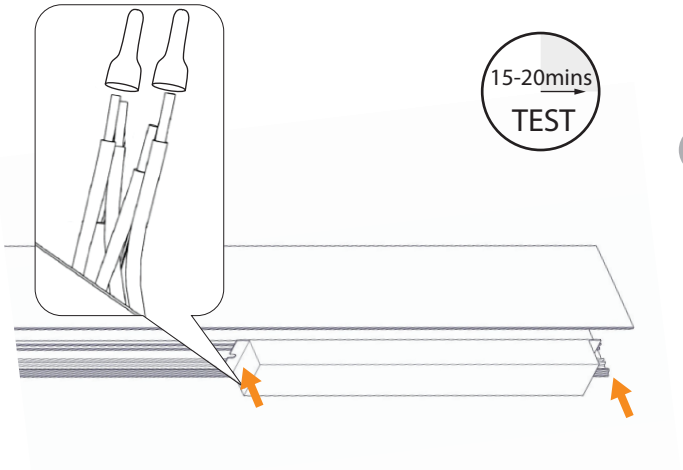

1 Mount drivers inside profile with screws (535-A24-1Y) and #8 lock washer (44-SN), location depend on driver and profile length. Run and connect AC and DC wires. (depend on layout)
***NOTE:** Test fixture for 15-20 mins

2 Attach tethers to inside of profile with screw (535-A24-1Y) and flat washer. (W-216CP)

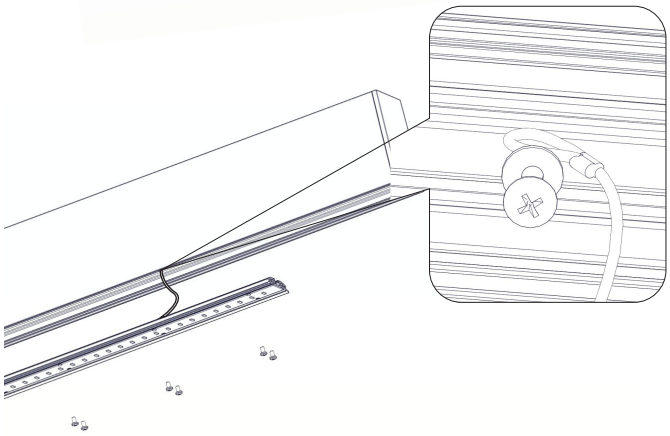

3 On both ends, secure L bracket (666-03-169-00) in middle groove of profile with two 8-32, 3/8" screws (535-A24-1Y) and lock washers (44-SN).
***NOTE:** It will be easier to align end caps if L bracket is not right against it. Preferred to have a small gap.

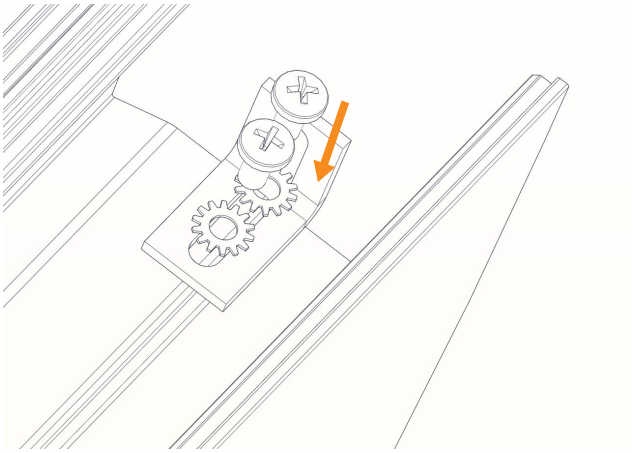

4 Install LED base inside of profile.
Tighten screws (535-A24-1Y) starting from one end only while using sample lens piece to ensure proper fit.
***NOTE:** Ensure no wires are caught between LED base and profile.

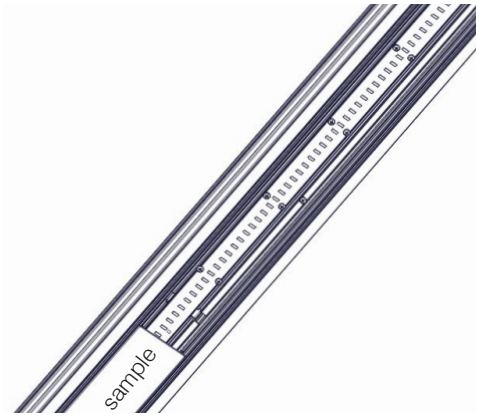

5 Repeat same steps for top light, if applicable.

SENSO
www.sensolighting.com
302 50 Ave SE Calgary Alberta T2G 2A9 Canada • E: info@sensolighting.com • T: 403.216.7043 • F:403.216.7045

C Assemble fixture (continue)

VESTA 1

6 Place feed plate (666-03-164-00) on top of back plate (666-03-168-00), secure position with one #6-32, 3/8"countersunk screw (MS-2352P). Place aircraft cable base (666-03-183-00) on top, secure it with 1/4-20, 3/8" screw (385-206) from the bottom

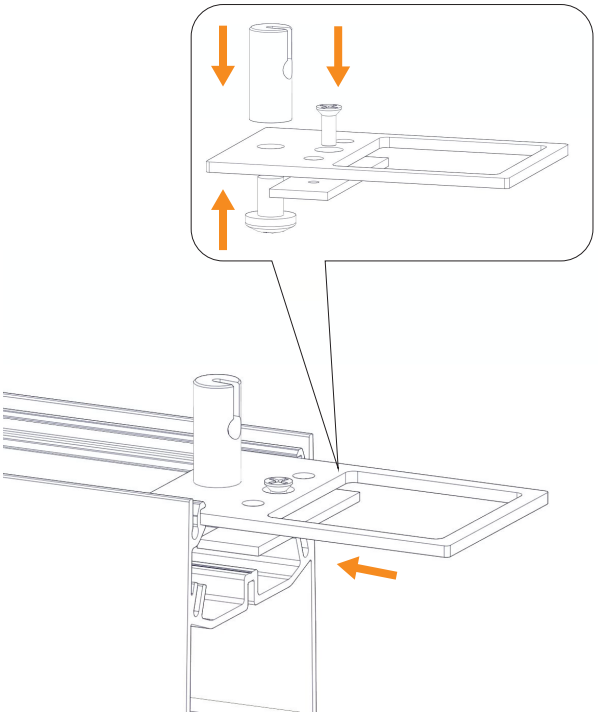

7 Feed wire should go through rectangular hole of feed plate.
Thread feed wires through strain relief, mount strain relief on top plate (666-03-167-00) as shown with lock washer(672-006ZP) and nut (155-P09-1K).

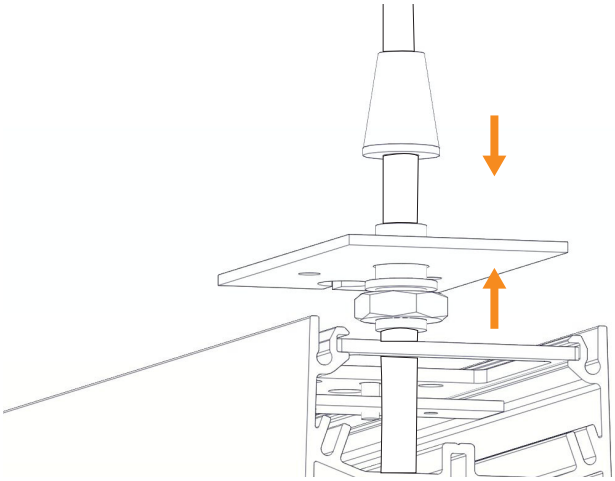

8 Secure top plate with two (2) 6-32, 1/2" countersunk screws (MS-2006P).

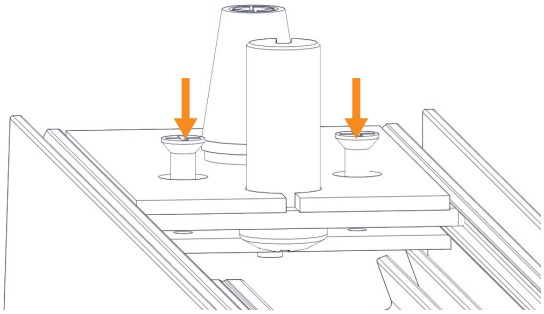

Overall assembly break down for mounting section:

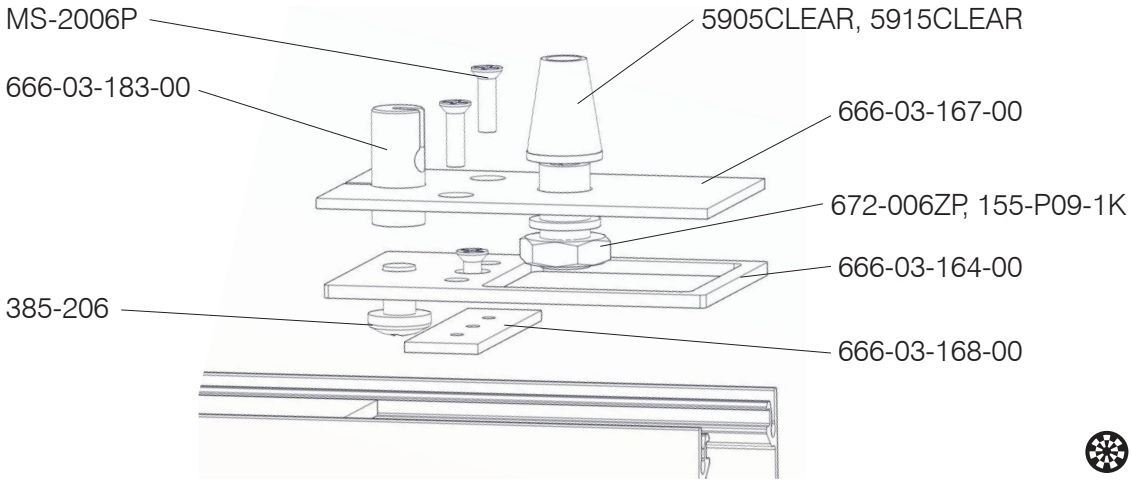

SENSO
www.sensolighting.com
302 50 Ave SE Calgary Alberta T2G 2A9 Canada • E: info@sensolighting.com • T: 403.216.7043 • F:403.216.7045

C Assemble fixture (continue)

VESTA 1

9 Insert ball-end of aircraft cable (C-1/16-50-GAL-15') into aircraft cable base (on both ends). Secure base with 1/4-20 5/16" set screw (SS-189).

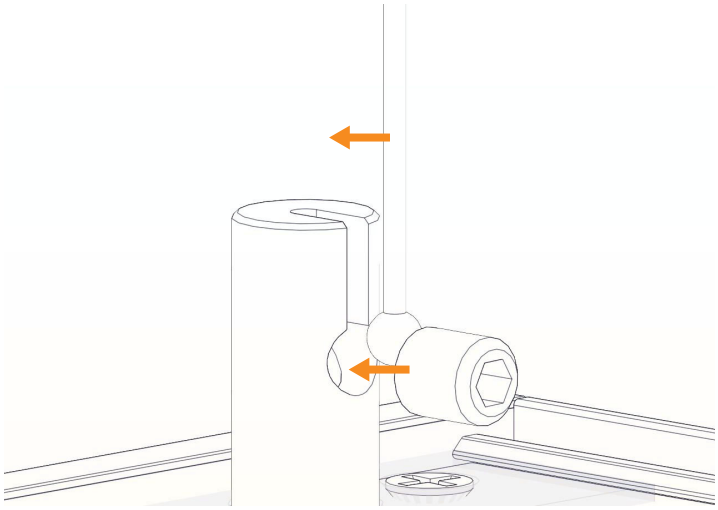

10 Assemble end cap (666-03-165-00) with 4 M3 10mm set screws (481-104)

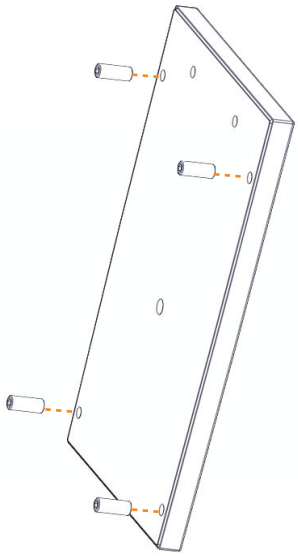

11 Secure end cap as shown with 8-32, 1/2" set screw (135100), #8-32 nut (155-P04-1P) and #8 lockwasher (44-SN).

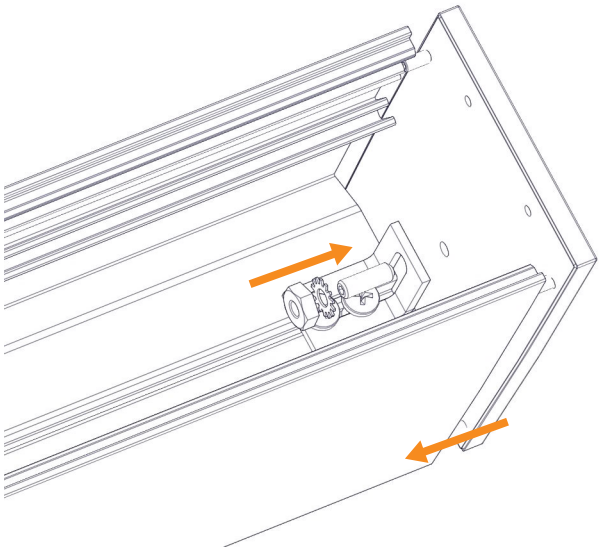

12 Insert lens, mark length with tape, remove lens and cut to marked length. Repeat for top lens, if applicable.
NOTE: Do not remove protective film.

Top lens
(666-06-061-00)

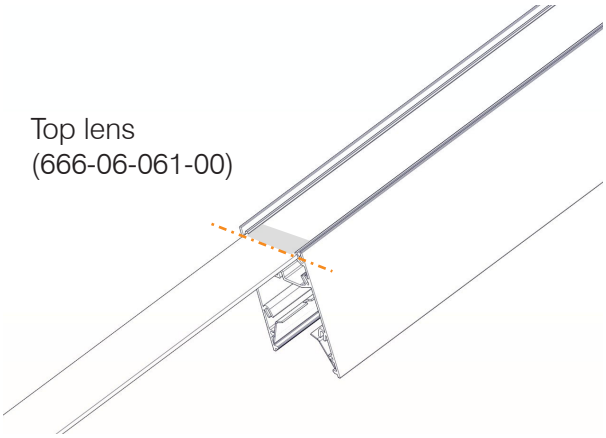

Bottom lens
(5606-C1N)

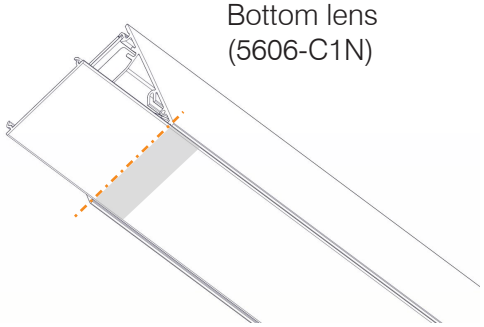

SENSO
www.sensolighting.com
302 50 Ave SE Calgary Alberta T2G 2A9 Canada • E: info@sensolighting.com • T: 403.216.7043 • F:403.216.7045

C Assemble fixture (continue)

VESTA 1

13 Clean lens and insert top lens. Then install mounting section. Please refer to step 6 ,8 and 9. Add plug (34-613-0) instead of feed on this side.

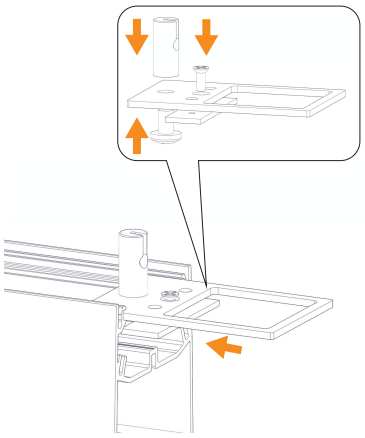

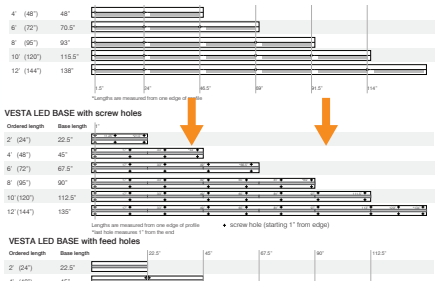

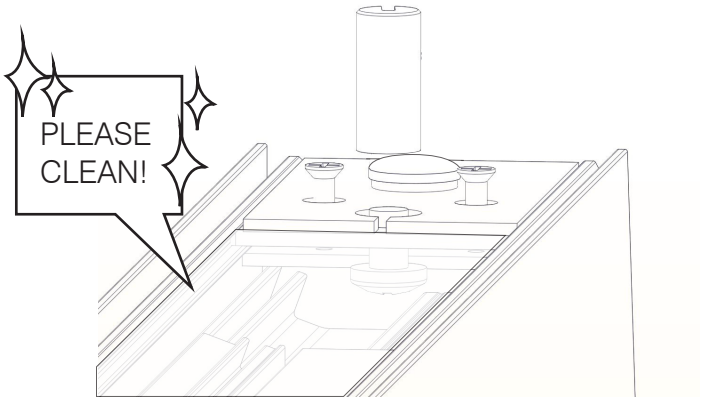

14 Assemble end cap with 4 set screws. Please refer to step 10,11.
Secure end cap as shown with 8-32, 1/2" set screw, and #8 lockwasher.

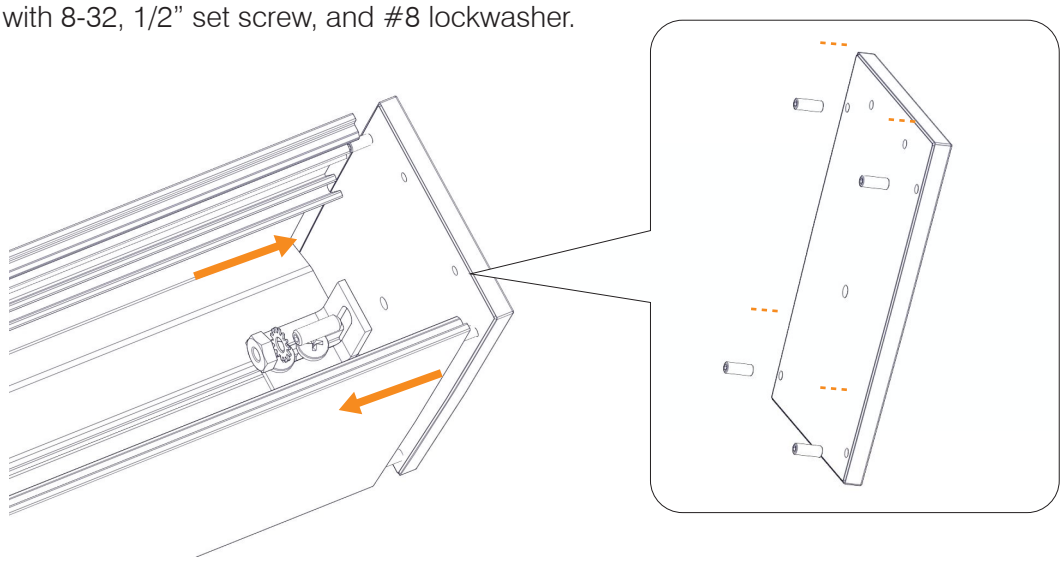

15 Clean lens, install bottom lens, fixture completed.
Test fixture for at least an hour.

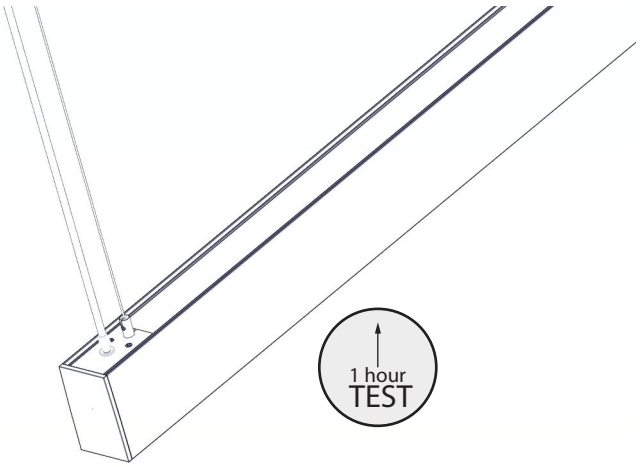

SENSO
www.sensolighting.com
302 50 Ave SE Calgary Alberta T2G 2A9 Canada • E: info@sensolighting.com • T: 403.216.7043 • F:403.216.7045

VESTA 1

Diagram 1.1 VESTA 1 & 2 EXTRUSION CUT LENGTH

Ordered length	Actual cut length
2' (24")	25.5"
4' (48")	48"
6' (72")	70.5"
8' (95")	93"
10' (120")	115.5"
12' (144")	138"

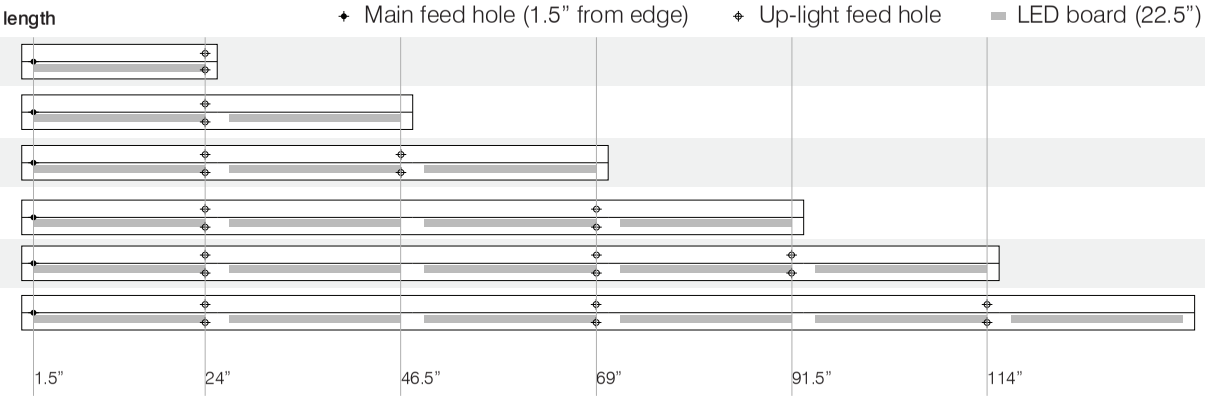

*Lengths are measured from one edge of profile

Diagram 2.1 VESTA LED BASE with screw holes

Ordered length	Base length
2' (24")	22.5"
4' (48")	45"
6' (72")	67.5"
8' (95")	90"
10' (120")	112.5"
12' (144")	135"

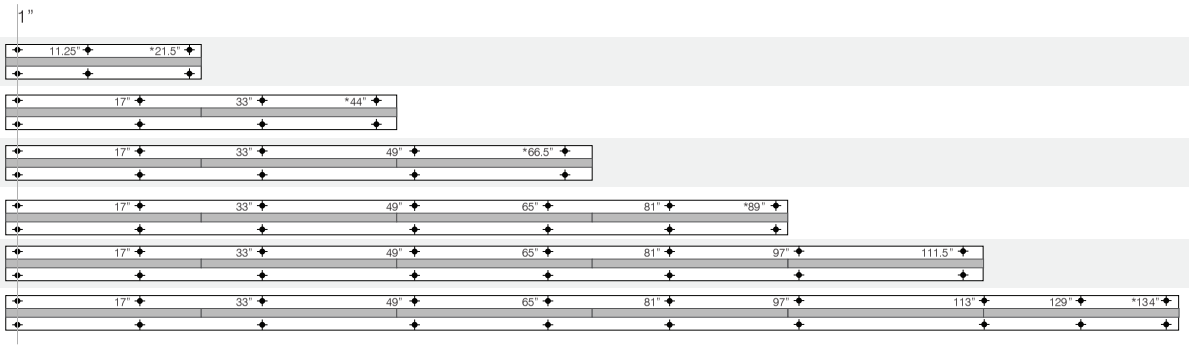

Lengths are measured from one edge of profile
*last hole measures 1" from the end

screw hole (starting 1" from edge)

Diagram 2.2 VESTA LED BASE with feed holes

Ordered length	Base length
2' (24")	22.5"
4' (48")	45"
6' (72")	67.5"
8' (95")	90"
10' (120")	112.5"
12' (144")	135"

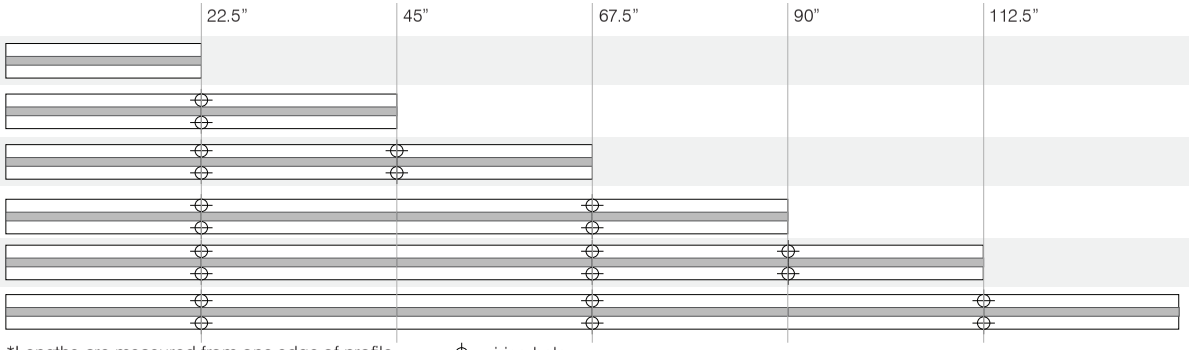

*Lengths are measured from one edge of profile

wiring hole

SENSO
www.sensolighting.com
302 50 Ave SE Calgary Alberta T2G 2A9 Canada • E: info@sensolighting.com • T: 403.216.7043 • F:403.216.7045