A Prep profile (666-03-163-00) for painting

VESTA 1

1. Cut extrusion to desire length, 22.5” (board length) x # of boards required for specified length + 1/2”. Please see Diagram 1.1 for exact cut length.
***NOTE:** Inspect pieces for damage, dents and bends.

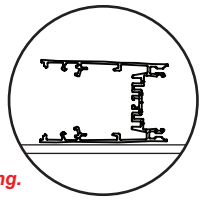

For best result, lay on side when cutting.

2. Drill a 3/8” hole 1.5” from the edge of extrusion for feed wire, on one side only. Use guide on extrusion (as shown on profile)

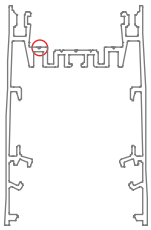

3. Drill a 1/4” hole for top feed wire, please refer to dia.1.1 for proper distance. Use guides on extrusion (as shown on profile)

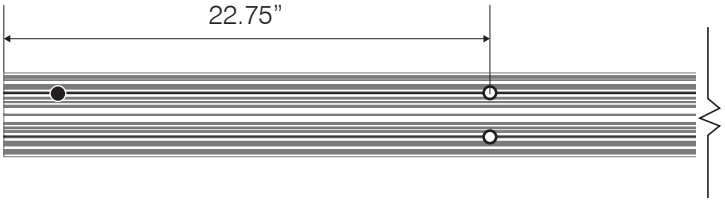

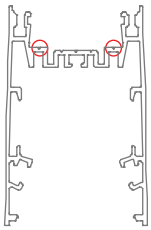

4. Drill two holes (Hole size recommended for rivet: 0.160”-0.164”)for L bracket mounting on each end using template. Use guides on extrusion (as shown on profile)

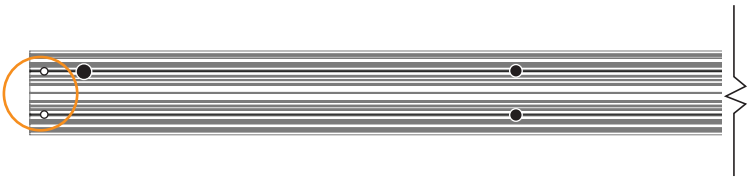

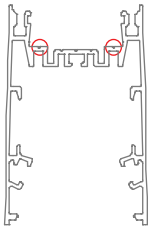

5. De-burr all holes and edges, send extrusion (666-03-163-XX), end cap (666-03-165-XX) and top plate (666-03-167-XX) off to paint.

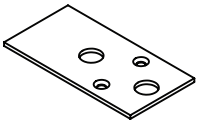

End cap 666-03-165, two per fixture

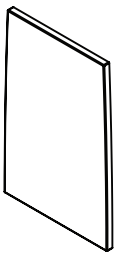

Top plate 666-03-167, two per fixture

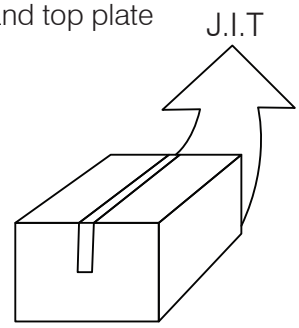

Diagram 1.1 VESTA 1 EXTRUSION CUT LENGTH & HOLE LOCATION

Ordered length	Actual cut length
4’ (48”)	45.5”
8’ (95”)	90.5”
12’ (144”)	135.5”

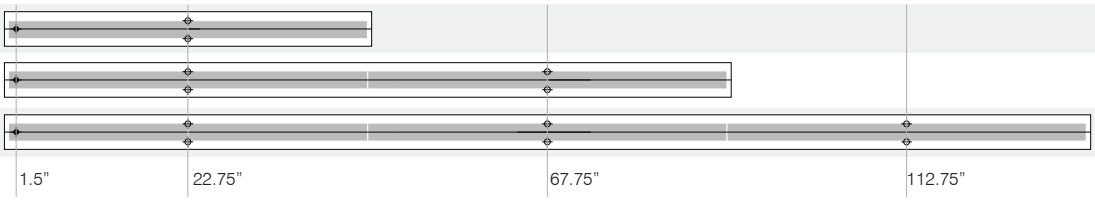

*Lengths are measured from one edge of profile

SENSO
www.sensolighting.com
302 50 Ave SE Calgary Alberta T2G 2A9 Canada • E: info@sensolighting.com • T: 403.216.7043 • F:403.216.7045

VESTA 1

B Prep LED and reflector

Diagram 1.2 **REFLECTOR LENGTH**

Ordered length	Actual length	# of reflector
4' (48")	45"	1
8' (95")	90"	2
12' (144")	135"	3

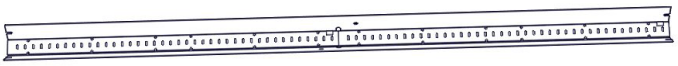

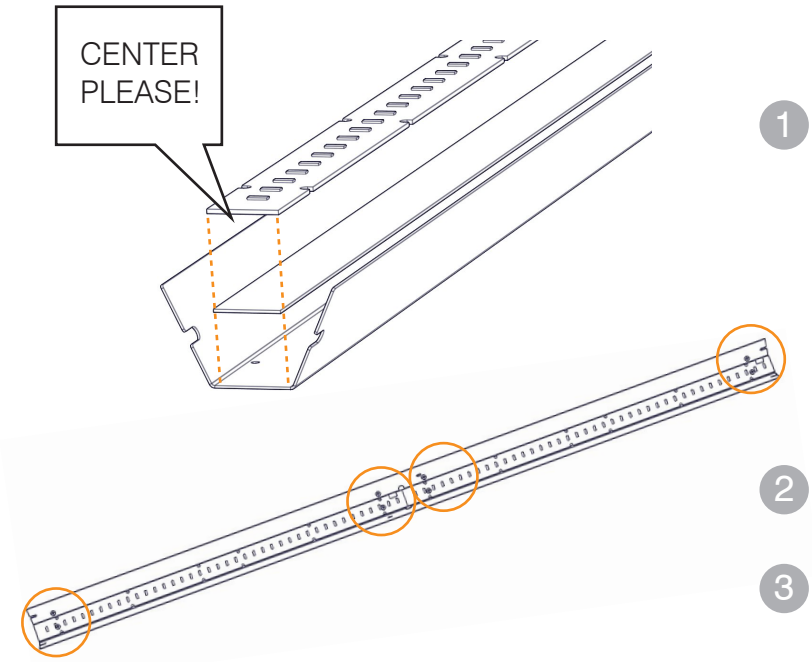

1. Attach LED board to reflector (666-03-201-31) with thermal tape (8926-025), please ensure the the boards are perfectly centered.
2. Secure boards with #6-32, 1/4" screws (535-A22-1W), 8 per reflector.
3. Attach white DC wires to boards. Add yellow connectors (873-902)

C Prep top LED and reflector (optional)

1. Attach LED board to extrusion (666-03-163-XX) with thermal tape (8926-025), please ensure the the boards are perfectly centered.

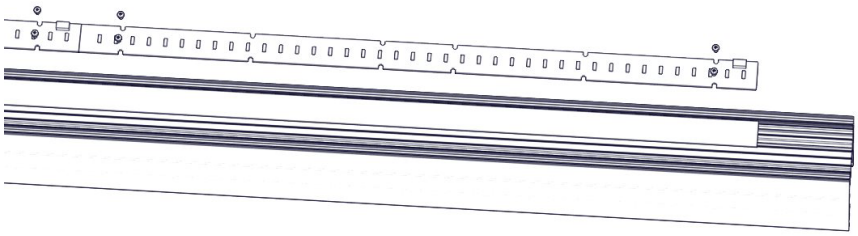

2. Secure boards with #6-32, 1/4" screws (535-A22-1W), 4 per board.
3. Attach white DC wires to boards.

SENSO
www.sensolighting.com
302 50 Ave SE Calgary Alberta T2G 2A9 Canada • E: info@sensolighting.com • T: 403.216.7043 • F:403.216.7045

D Mount drivers and L brackets

VESTA 1

x1 for 8' Vesta

x2 for 12' Vesta

1. STEP 1 & 2 APPLIES TO PAINTED REFLECTORS ONLY.

   For 8' Vesta, mount one L-Bracket in between the two reflectors with nut and screw.

   For 12' Vesta, mount two L-Bracket in between the reflectors with nut and screw.

2. Slide in 8-32 x 1/2" screws (MS-409H) in middle groove, secure L bracket with lock washer (44-SN) and nut (155-P04-1P). Distance determined by length of reflector. Install between drivers.

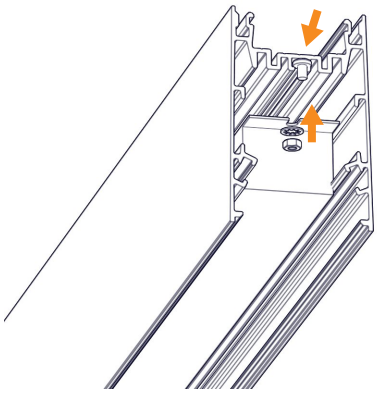

3. Secure drivers with 8-32 x 1/2" screws (MS-409H) and #8 lock washer (44-SN) and nut (155-P04-1P). Do not place drivers in the way of any feed holes.

4. Connect (optional) top LED boards with drivers.

5. Temporary connect down light for testing.

6. Organize wires with zipties (VMNT5-30).

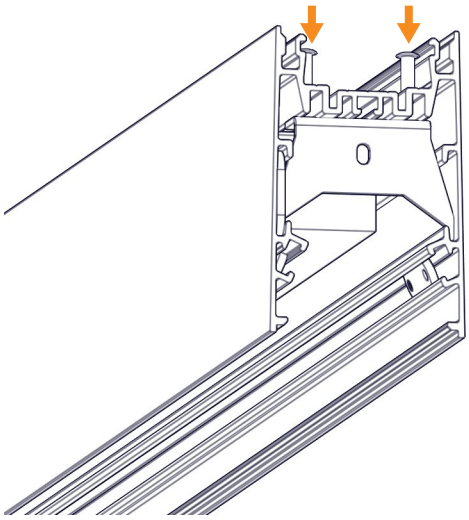

7. Line up L bracket (666-02-190-12) with pre-drilled holes, secure with rivet (AD58BS) from the top.

8. Check to ensure it is well secured.

9. Repeat on the other side.

SENSO
www.sensolighting.com
302 50 Ave SE Calgary Alberta T2G 2A9 Canada • E: info@sensolighting.com • T: 403.216.7043 • F:403.216.7045

E Install suspension system

VESTA 1

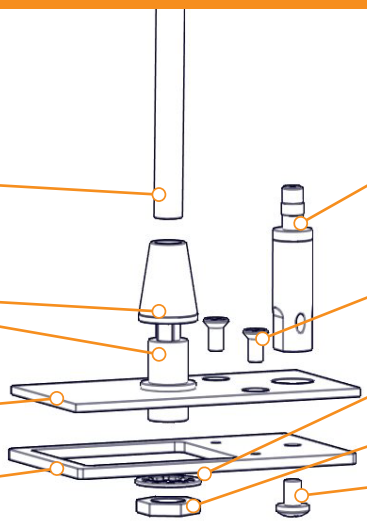

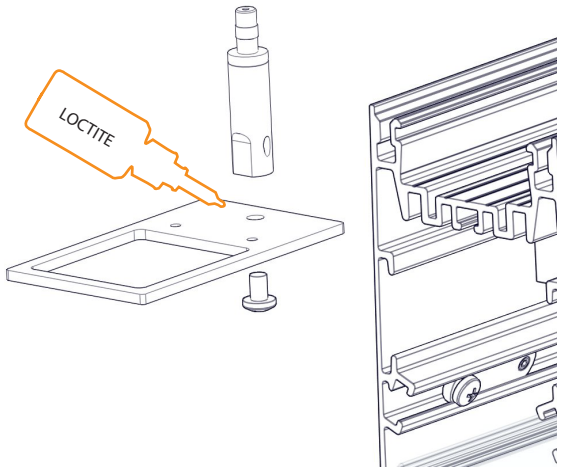

1 Secure cable gripper on suspension plate with screw, add a drop of loctite.

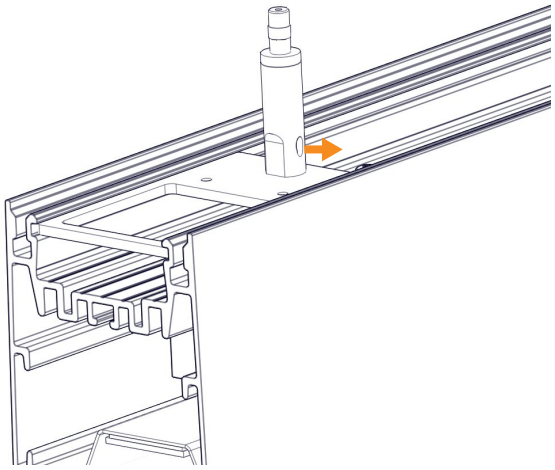

2 Slide suspension plate into extrusion, line up with edge. Make sure all holes on grippers are facing the same direction on all Vesta.

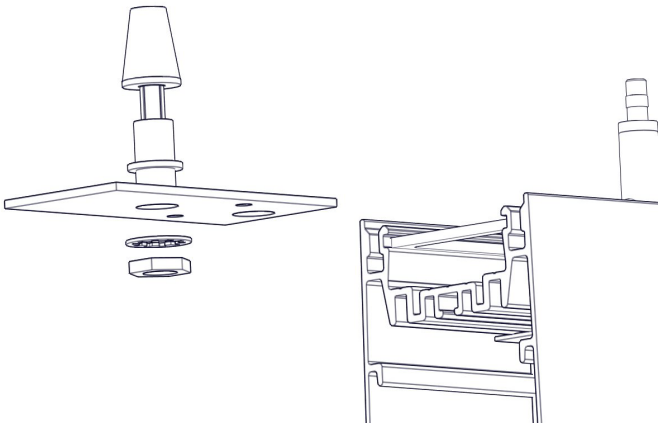

3 Mount cord grip and cap onto feed plate with lockwasher and nut.

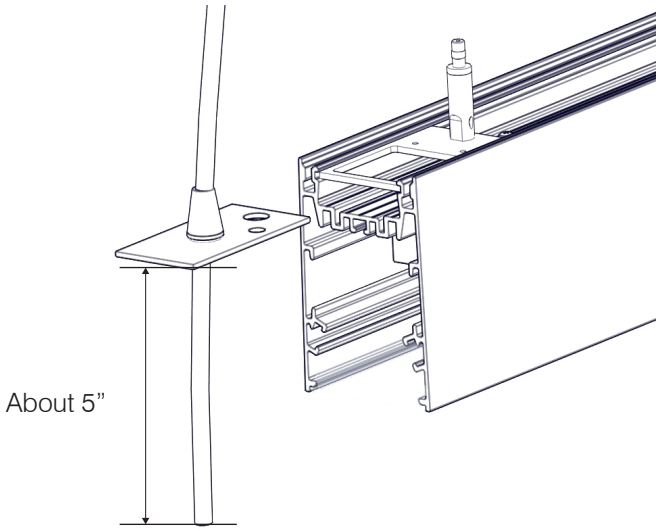

4 Thread feed wire through cord grip, leave 5" of wire for connection.

SENSO
www.sensolighting.com
302 50 Ave SE Calgary Alberta T2G 2A9 Canada • E: info@sensolighting.com • T: 403.216.7043 • F:403.216.7045

VESTA 1

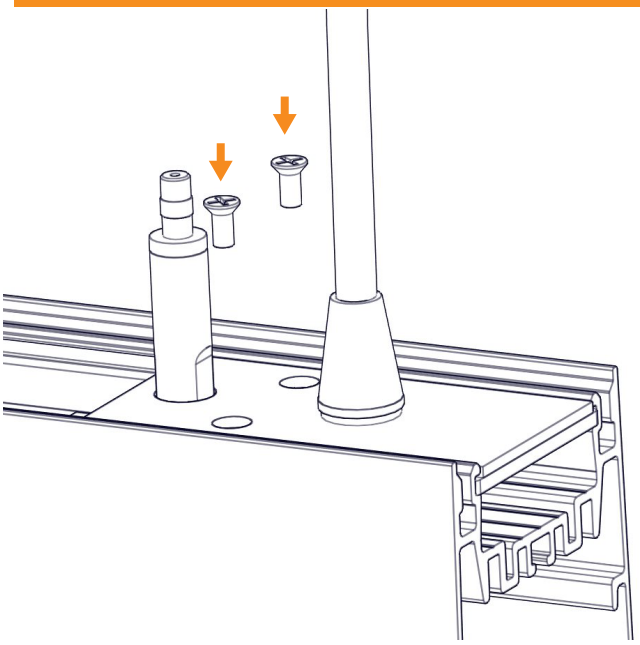

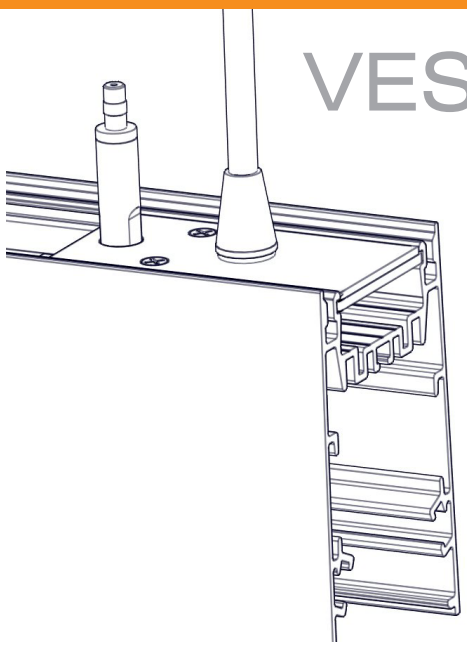

5 Thread feed wire through opening in suspension plate. Place feed plate over gripper and onto suspension plate.

6 Secure with two countersunk screws.

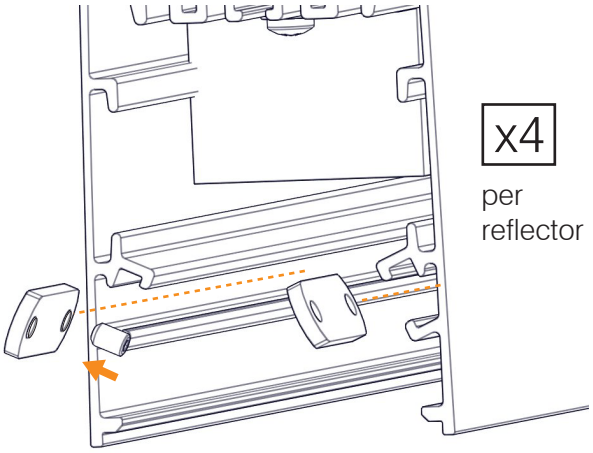

x4

per reflector

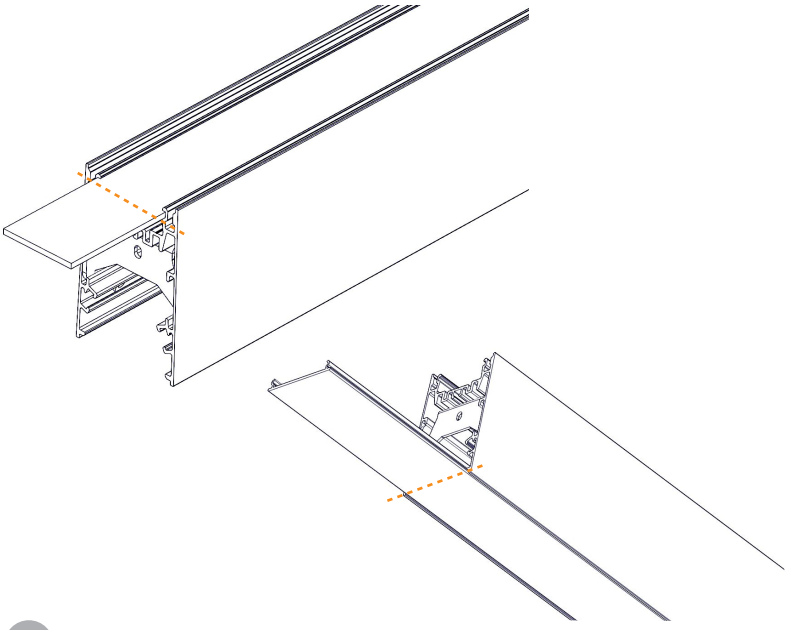

7 Insert all 6 T-nut (3281) in groove as shown, secure in approxiate position with set screws. The extra holes need line up with reflector holes. Make sure the bump guide on T-nut is visible.

8 Measure and cut (if needed) the top and bottom lens

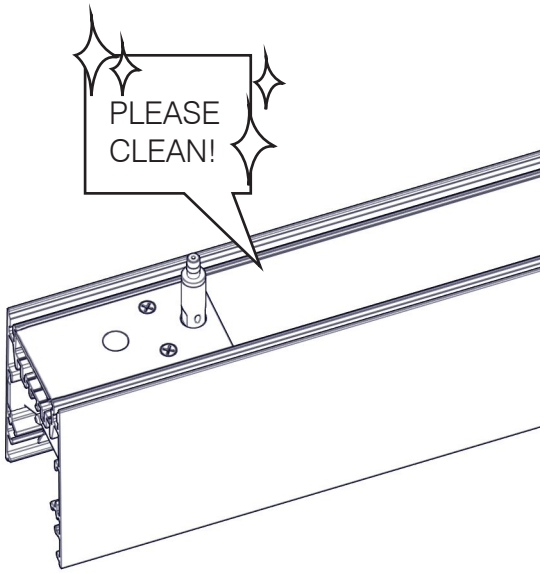

9 Slide in Top lens.
Install suspension system, this side without feed, replace with plug.

SENSO
www.sensolighting.com
302 50 Ave SE Calgary Alberta T2G 2A9 Canada • E: info@sensolighting.com • T: 403.216.7043 • F:403.216.7045

F Install end caps and down light

VESTA 1

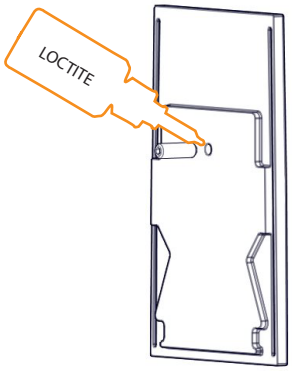

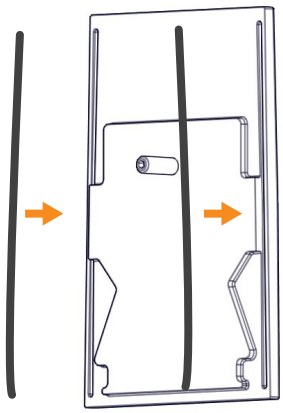

1 Prepare end caps by adding set screw in the middle hole, add a drop of loctite to secure screw.

2 Add two strips of gasket (about 4.5”), measure to fit, apply carefully.

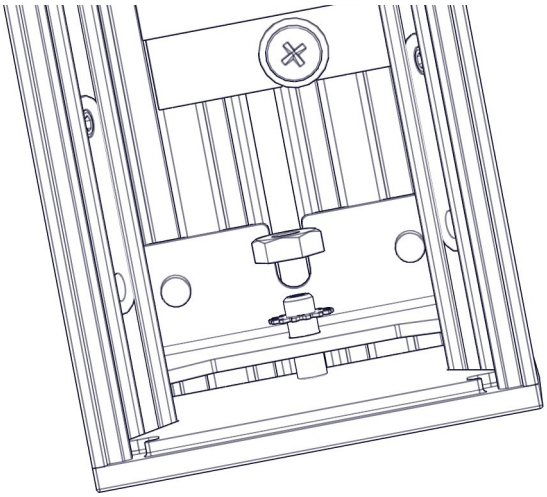

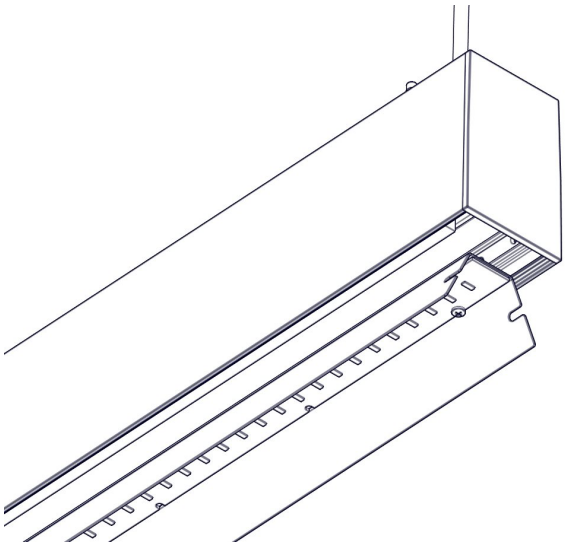

3 Secure end caps to L Brackets with #8 lock washer (44-SN) and #8-32 nut (155-P04-1P).

4 Insert reflector in extrusion

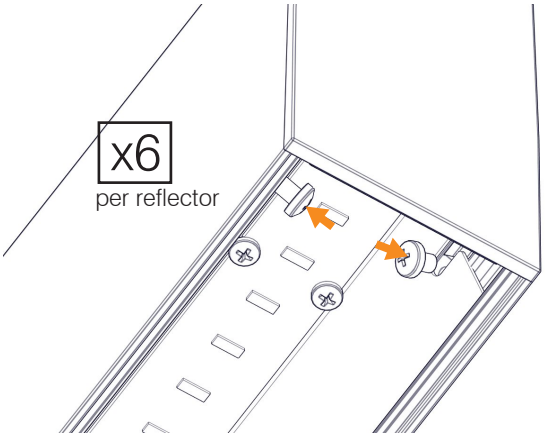

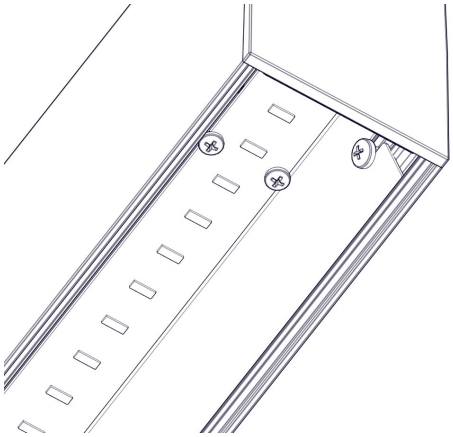

5 Apply screws (385-B52-1C) to secure reflector in place. Screws lines up with T-nuts.

SENSO
www.sensolighting.com
302 50 Ave SE Calgary Alberta T2G 2A9 Canada • E: info@sensolighting.com • T: 403.216.7043 • F:403.216.7045

G Install Bottom lens

VESTA 1

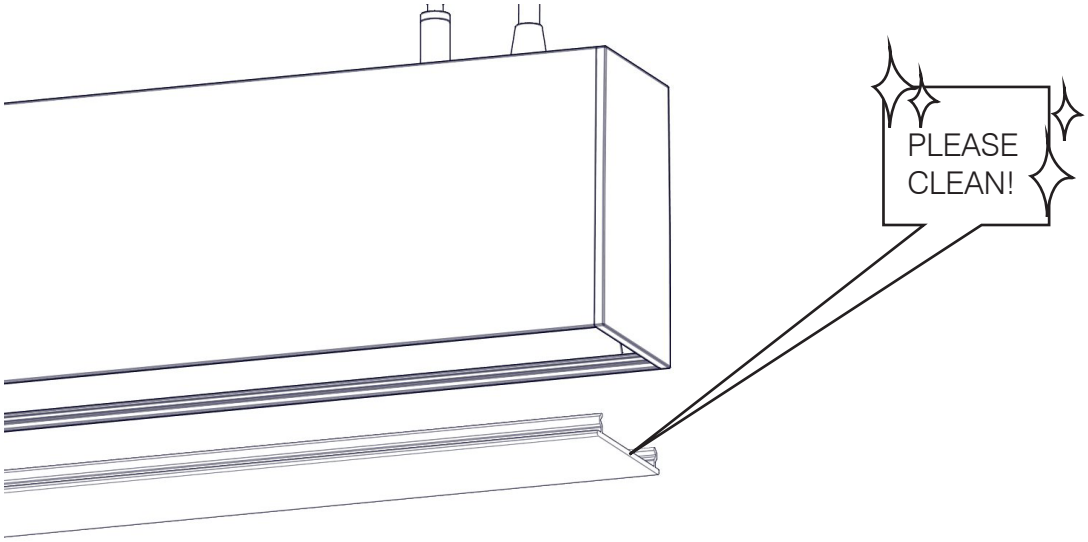

1. Clean lens and insert carefully in place

2. Finished! Good job! Test for 1 hour if possible.

SENSO
www.sensolighting.com
302 50 Ave SE Calgary Alberta T2G 2A9 Canada • E: info@sensolighting.com • T: 403.216.7043 • F:403.216.7045