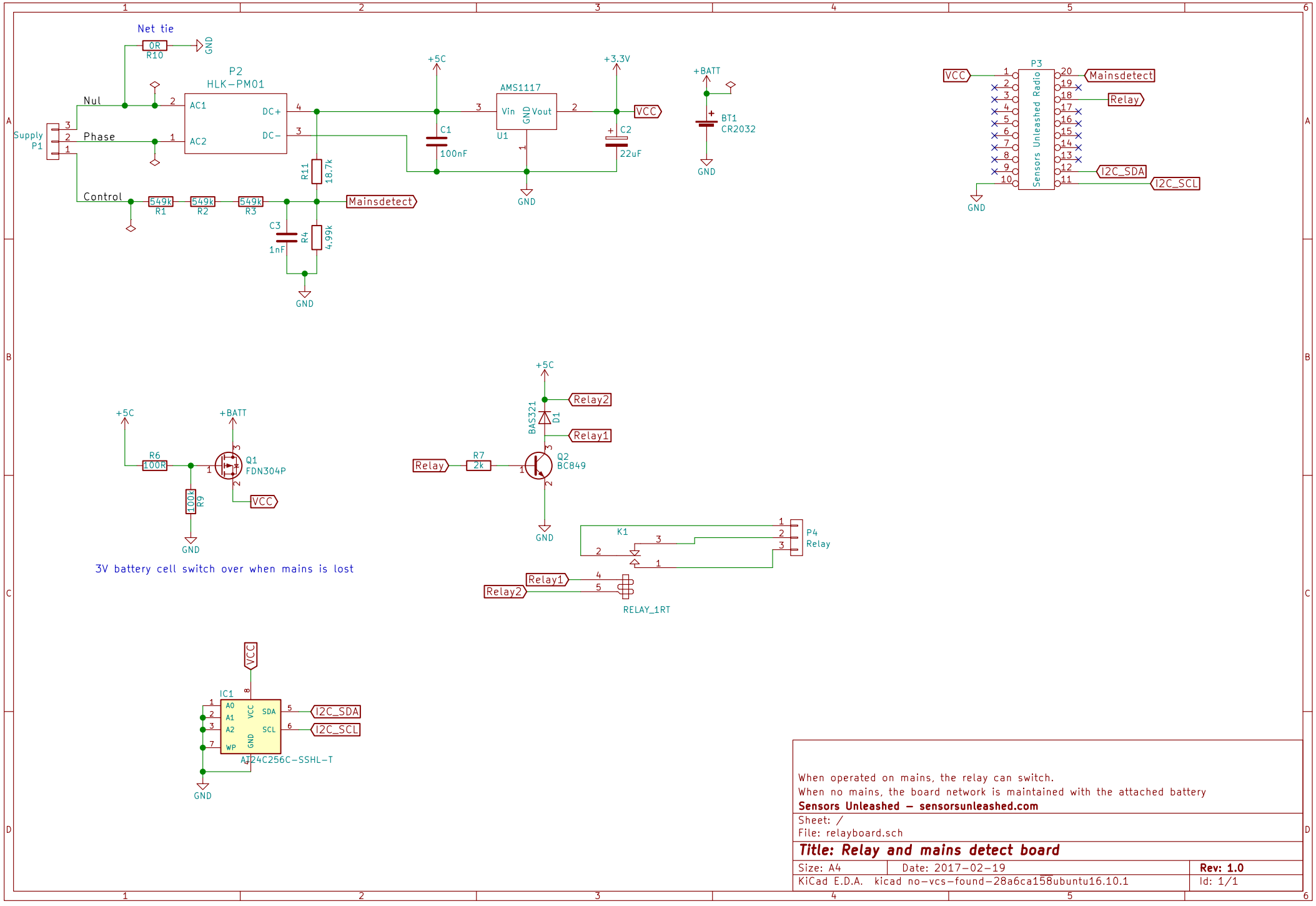

When operated on mains, the relay can switch.
When no mains, the board network is maintained with the attached battery

Sensors Unleashed — sensorsunleashed.com

Sheet: /
File: relayboard.sch

Title: Relay and mains detect board

Size: A4	Date: 2017-02-19	**Rev: 1.0**
KiCad E.D.A. kicad no-vcs-found-28a6ca158ubuntu16.10.1		Id: 1/1