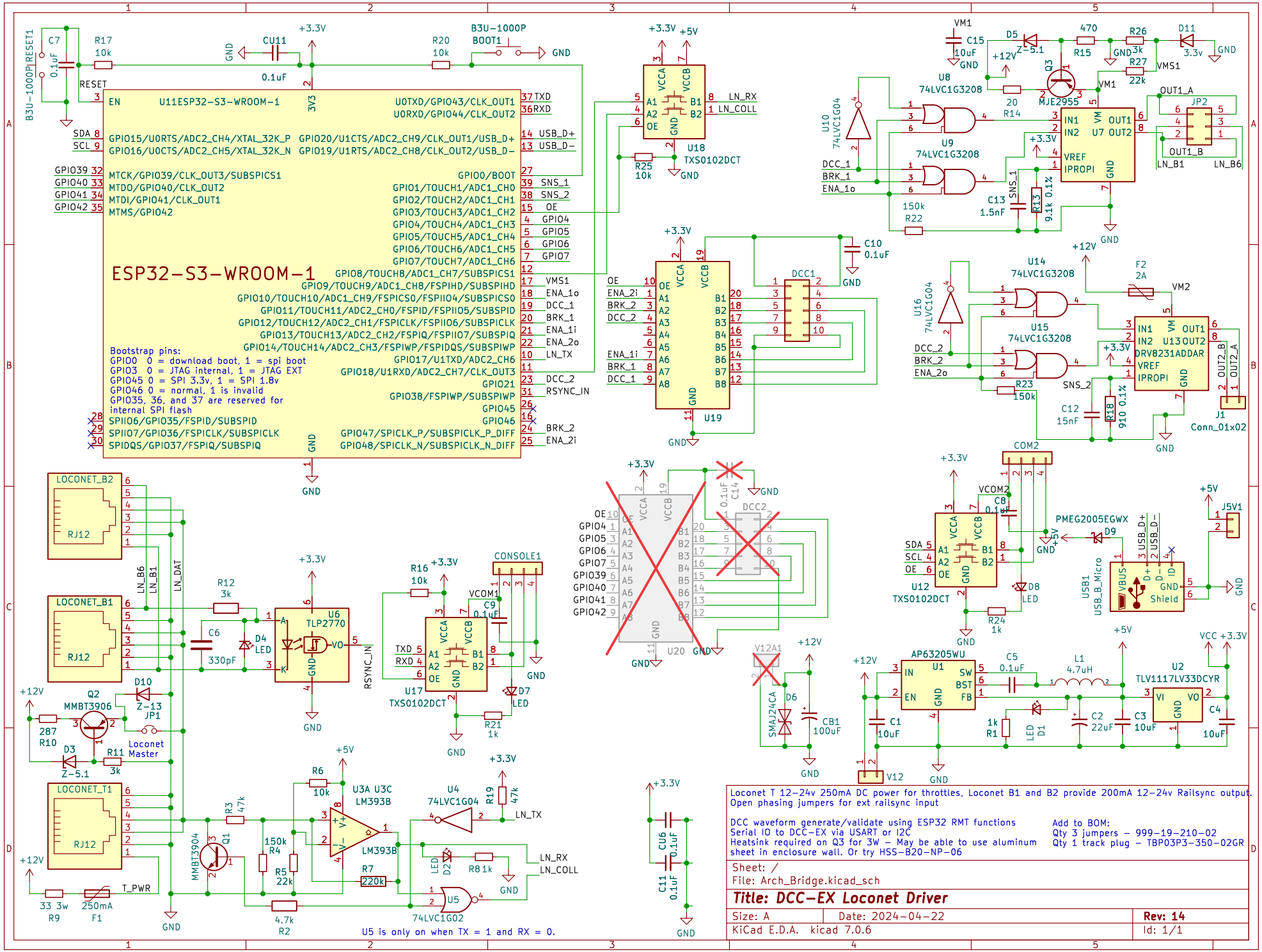
ESP32-S3-WROOM-1
U11ESP32-S3-WROOM-1
Bootstrap pins:
GPIO0 0 = download boot, 1 = spi boot
GPIO3 0 = JTAG internal, 1 = JTAG EXT
GPIO45 0 = SPI 3.3v, 1 = SPI 1.8v
GPIO46 0 = normal, 1 is invalid
GPIO35, 36, and 37 are reserved for internal SPI flash
U18 TXS0102DCT
U19
U20
U17 TXS0102DCT
U12 TXS0102DCT
U8 74LVC1G3208
U9 74LVC1G3208
U14 74LVC1G3208
U15 74LVC1G3208
U10 74LVC1G04
U16 74LVC1G04
U4 74LVC1G04
U5 74LVC1G02
U3A U3C LM393B
U6 TLP2770
U1 AP63205WU
U2 TLV1117LV33DCYR
JP2
J1 Conn_01x02
J5V1
USB1 USB_B_Micro
LOCONET_B2
LOCONET_B1
LOCONET_T1
CONSOLE1
COM2
DCC1
DCC2
Loconet Master
U5 is only on when TX = 1 and RX = 0.
Loconet T 12-24v 250mA DC power for throttles, Loconet B1 and B2 provide 200mA 12-24v Railsync output.
Open phasing jumpers for ext railsync input
DCC waveform generate/validate using ESP32 RMT functions
Serial IO to DCC-EX via USART or I2C
Heatsink required on Q3 for 3W - May be able to use aluminum sheet in enclosure wall. Or try HSS-B20-NP-06
Add to BOM:
Qty 3 jumpers - 999-19-210-02
Qty 1 track plug - TBP03P3-350-02GR
Sheet: /
File: Arch_Bridge.kicad_sch
Title: DCC-EX Loconet Driver
Size: A
Date: 2024-04-22
Rev: 14
KiCad E.D.A. kicad 7.0.6
Id: 1/1