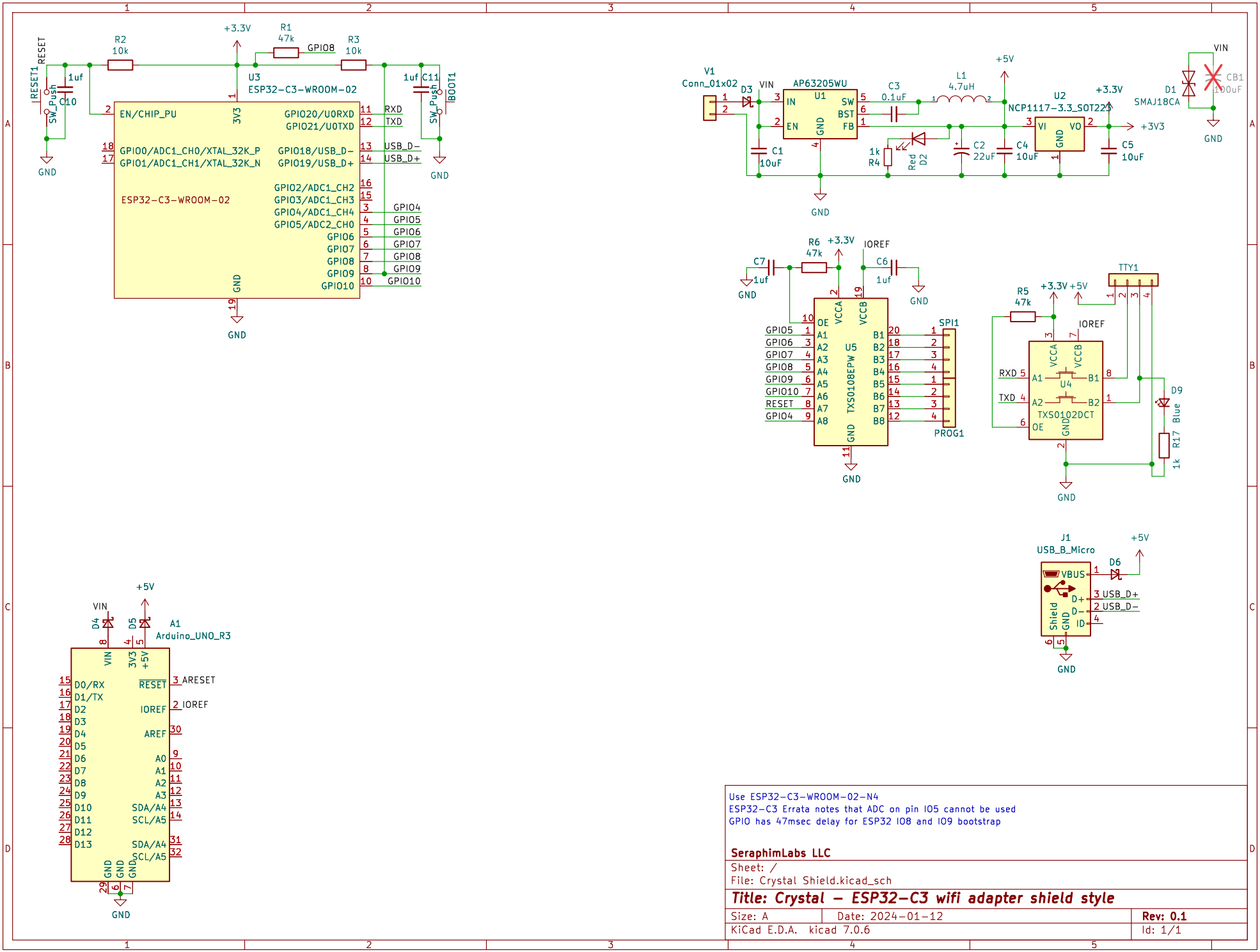
RESET
RESET1
SW_Push
1uf
C10
R2
10k
+3.3V
R1
47k
GPIO8
R3
10k
U3
ESP32-C3-WROOM-02
1uf C11
BOOT1
EN/CHIP_PU
3V3
GPIO20/U0RXD
GPIO21/U0TXD
GPIO0/ADC1_CH0/XTAL_32K_P
GPIO1/ADC1_CH1/XTAL_32K_N
GPIO18/USB_D-
GPIO19/USB_D+
ESP32-C3-WROOM-02
GPIO2/ADC1_CH2
GPIO3/ADC1_CH3
GPIO4/ADC1_CH4
GPIO5/ADC2_CH0
GPIO6
GPIO7
GPIO8
GPIO9
GPIO10
GND
RXD
TXD
USB_D-
USB_D+
GPIO4
GPIO5
GPIO6
GPIO7
GPIO8
GPIO9
GPIO10
V1
Conn_01x02
D3
VIN
AP63205WU
U1
IN
EN
SW
BST
FB
C3
0.1uF
L1
4.7uH
+5V
U2
NCP1117-3.3_SOT223
VI
VO
+3.3V
+3V3
C1
10uF
1k
R4
Red
D2
C2
22uF
C4
10uF
C5
10uF
D1
SMAJ18CA
CB1
100uF
R6
47k
IOREF
C7
1uf
C6
1uf
OE
VCCA
VCCB
U5
TXS0108EPW
A1
A2
A3
A4
A5
A6
A7
A8
B1
B2
B3
B4
B5
B6
B7
B8
SPI1
PROG1
TTY1
R5
47k
U4
TXS0102DCT
RXD
TXD
D9
Blue
R17
1k
J1
USB_B_Micro
VBUS
D+
D-
ID
Shield
D6
A1
Arduino_UNO_R3
D4
D5
D0/RX
D1/TX
D2
D3
D4
D5
D6
D7
D8
D9
D10
D11
D12
D13
RESET
IOREF
AREF
A0
A1
A2
A3
SDA/A4
SCL/A5
ARESET
Use ESP32-C3-WROOM-02-N4
ESP32-C3 Errata notes that ADC on pin IO5 cannot be used
GPIO has 47msec delay for ESP32 IO8 and IO9 bootstrap
SeraphimLabs LLC
Sheet: /
File: Crystal Shield.kicad_sch
Title: Crystal – ESP32-C3 wifi adapter shield style
Size: A
Date: 2024-01-12
Rev: 0.1
KiCad E.D.A. kicad 7.0.6
Id: 1/1