SERES ARTUR

TEMĂ TS NR 4

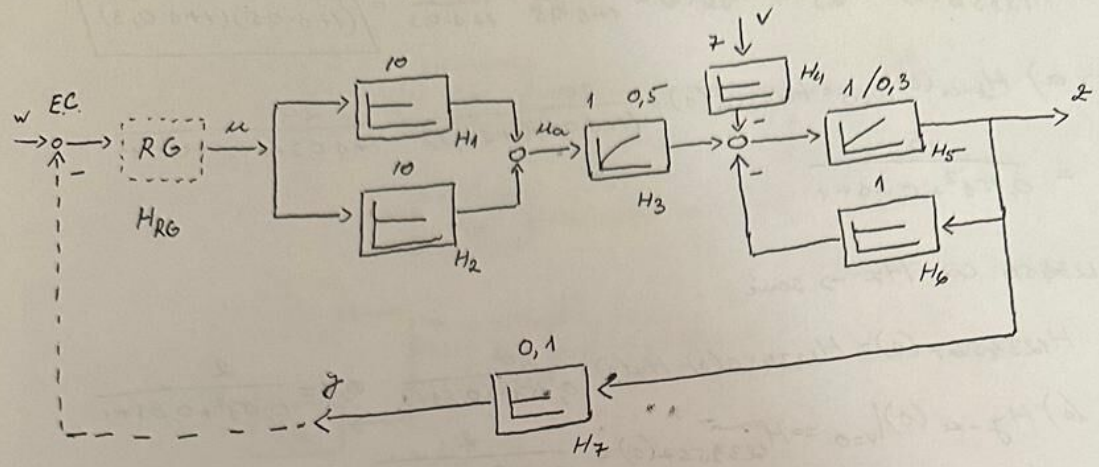

a) $H_{z-u}(s)|_{v=0} = ?$

b) $H_{y-u}(s)|_{v=0} = ?$

c) $H_{z-w}(s)|_{v=0} = ?$

d) $H_{z-v}(s)|_{w=0} = ?$

$H_1 \rightarrow ET\_P \Rightarrow H_1(s) = 10$

$H_2 \rightarrow ET\_P \Rightarrow H_2(s) = 10$

$H_3 \rightarrow ET\_PT1 \Rightarrow H_3(s) = \frac{1}{1+s \cdot 0,5}$

$H_4 \rightarrow ET\_P \Rightarrow H_4(s) = 7$

$H_5 \rightarrow ET\_i \Rightarrow H_5(s) = \frac{1}{s \cdot 0,3}$

$H_6 \rightarrow ET\_P \Rightarrow H_6(s) = 1$

$H_7 \rightarrow ET\_P \Rightarrow H_7(s) = 0,1$

Stabilim Tipul Conexiunilor și Grupăm:

H_1 cu H_2 → paralel

$\Rightarrow H_{12}(s) = H_1(s) + H_2(s) = 10 + 10 = 20$

H_{12} cu H_3 → serie

$\Rightarrow H_{123}(s) = H_{12}(s) \cdot H_3(s) = 20 \cdot \frac{1}{1+s \cdot 0,5} = \frac{20}{1+s \cdot 0,5}$

H_5 cu H_6 → reacție „-"

$\Rightarrow H_{56}(s) = \frac{H_5(s)}{1+H_5(s) \cdot H_6(s)} = \frac{\frac{1}{s \cdot 0,3}}{1+\frac{1}{s \cdot 0,3} \cdot 1} = \frac{1}{s \cdot 0,3} \cdot \frac{s \cdot 0,3}{1+s \cdot 0,3} = \frac{1}{1+s \cdot 0,3}$

H_{123} cu H_{56} -> serie

$$\Rightarrow H_{12356}(s) = H_{123}(s) \cdot H_{56}(s) = \frac{20}{1+s\cdot 0,5} \cdot \frac{1}{1+s\cdot 0,3} = \boxed{\frac{20}{(1+s\cdot 0,5)(1+s\cdot 0,3)}}$$

$$\Rightarrow a)\ H_{z-u}(s)\big|_{v=0} = H_{12356}(s) = \frac{20}{(1+s\cdot 0,5)(1+s\cdot 0,3)} = \frac{20}{1+s\cdot 0,3+s\cdot 0,5+0,15s^2}$$

$$= \frac{20}{0,15s^2+0,8s+1}$$

H_{12356} cu H_7 -> serie

$$\Rightarrow H_{123567}(s) = H_{12356}(s)\cdot H_7(s) = \frac{20}{0,15s^2+0,8s+1}\cdot 0,1 = \frac{2}{0,15s^2+0,8s+1}$$

$$\Rightarrow b)\ H_{y-u}(s)\big|_{v=0} = H_{123567}(s) = \frac{2}{0,15s^2+0,8s+1}\ ,$$

dar $H_{123567}(s) = \frac{2}{(1+s\cdot 0,5)(1+s\cdot 0,3)} = \frac{k_{pc}}{(1+s\cdot T_1)(1+s\cdot T_2)}$

$\Rightarrow k_{pc} = 2,$

$T_1 = 0,5$

$T_2 = 0,3\ ,$

$H_{RG} = \frac{k_r}{s}(1+s\cdot T_2)$, unde:

$k_r = \frac{1}{2k_{pc}\cdot T_\Sigma} = \frac{1}{2\cdot 2\cdot 0,3} = 0,83$ $\quad$ $T_2 = T_1 = 0,5$ (deoarece $T_1 > T_2$),

$$\Rightarrow \boxed{H_{RG} = \frac{0,83}{s}(1+s\cdot 0,5)} = \frac{0,83}{s} + 0,415$$

H_{RG} cu H_{12356} -> serie

$$\Rightarrow H_{RG12356}(s) = H_{RG}(s)\cdot H_{12356}(s) = \left(\frac{0,83}{s}+0,415\right)\cdot\left(\frac{20}{0,15s^2+0,8s+1}\right)$$

$$= \frac{16,6}{0,15s^3+0,8s^2+s} + \frac{8,3}{0,15s^2+0,8s+1} = \frac{16,6+s\cdot 8,3}{0,15s^3+0,8s^2+s}$$

$H_{RG12356}$ cu H_7 -> ~~serie~~ reactie "-"

$$\Rightarrow H_{RG123567}(s) = \frac{H_{RG12356}(s)}{1+H_{RG12356}(s)\cdot H_7(s)} = \frac{16,6+s\cdot 8,3}{0,15s^3+0,8s^2+s}\cdot\frac{0,15s^3+0,8s^2+s}{1,66+s\cdot 0,83+0,15s^3+0,8s^2+s}$$

$$= \frac{16,6+s\cdot 8,3}{0,15s^3+0,8s^2+1,83s+1,66}$$

$$\Rightarrow c)\ H_{z-w}(s)\big|_{v=0} = H_{RG123567}(s) = \frac{8,3\cdot s+16,6}{0,15s^3+0,8s^2+1,83s+1,66}$$

Pentru d) $H_{z-v}(s)|_{w=0} = ?$ redesenăm schema:

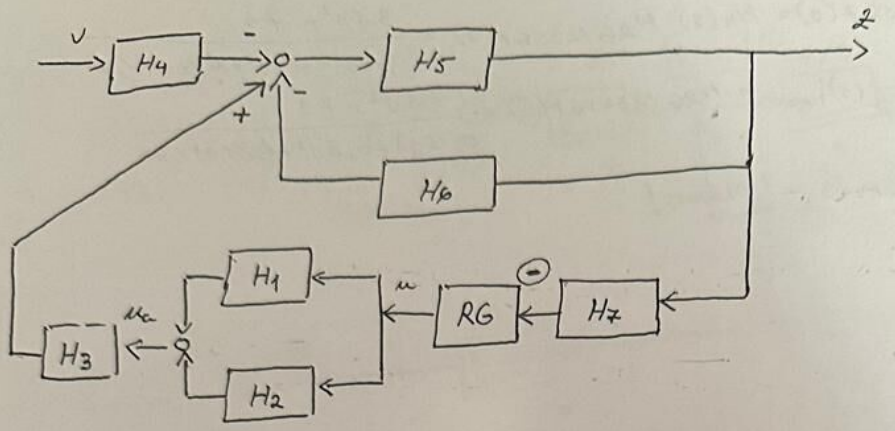

Perturbația v intră cu semnul „–" => iesă cu semnul „–"

Stabilim Tipul Conexiunilor și Grupăm:

H_5 cu H_6 -> reacție „–"

$$\Rightarrow H_{56}(s) = \frac{H_5(s)}{1 + H_5(s)\cdot H_6(s)} = \frac{1}{1+s\cdot 0,3}$$

H_1 cu H_2 -> paralel

$$\Rightarrow H_{12}(s) = H_1(s) + H_2(s) = 20$$

H_{12} cu H_3 -> serie

$$\Rightarrow H_{123}(s) = H_{12}(s)\cdot H_3(s) = 20\cdot \frac{1}{1+s\cdot 0,5} = \frac{20}{1+s\cdot 0,5}$$

H_{123} cu H_7 -> serie

$$\Rightarrow H_{1237}(s) = H_{123}(s)\cdot H_7(s) = \frac{20}{1+s\cdot 0,5}\cdot 0,1 = \frac{2}{1+s\cdot 0,5}$$

H_{1237} cu H_{RG} -> serie

$$\Rightarrow H_{RG1237}(s) = H_{1237}(s)\cdot H_{RG}(s) = \frac{2}{1+s\,0,5}\cdot\left(\frac{0,83}{s} + 0,415\right)$$

$$= \frac{1,66}{s+s^2\cdot 0,5} + \frac{0,83}{1+s\cdot 0,5} = \frac{0,83s+1,66}{0,5s^2+s}$$

H_{56} cu H_{RG1237} -> reacție „–" -> cu Minus!

$$\Rightarrow H_{RG123567}(s) = \frac{H_{56}(s)}{1 + H_{56}(s)\cdot H_{RG1237}(s)} = \frac{1}{1+0,3\cdot s}\cdot\frac{(1+0,3s)(0,5s^2+s)}{(1+0,3s)(0,5s^2+s)+0,83s+1,66}$$

$$= \frac{0,5s^2+s}{0,5s^2+s+0,15s^3+0,3s^2+0,83s+1,66} = \frac{0,5s^2+s}{0,15s^3+0,8s^2+1,83s+1,66}$$

H_4 cu $H_{RG\,123567}$ -> serie

$$\Rightarrow H_{RG\,1234567}(s) = H_4(s) \cdot H_{RG\,123567}(s) = \frac{3{,}5s^2 + 7s}{0{,}15s^3 + 0{,}8s^2 + 1{,}83s + 1{,}66}$$

$$\Rightarrow d)\ H_{z-v}(s)\big|_{w=0} = H_{RG\,1234567}(s) = -\frac{3{,}5s^2 + 7s}{0{,}15s^3 + 0{,}8s^2 + 1{,}83s + 1{,}66}$$

-> cu semnul „-" Minus!

SEREȘ ARTUR

TEMĂ TS NR 4

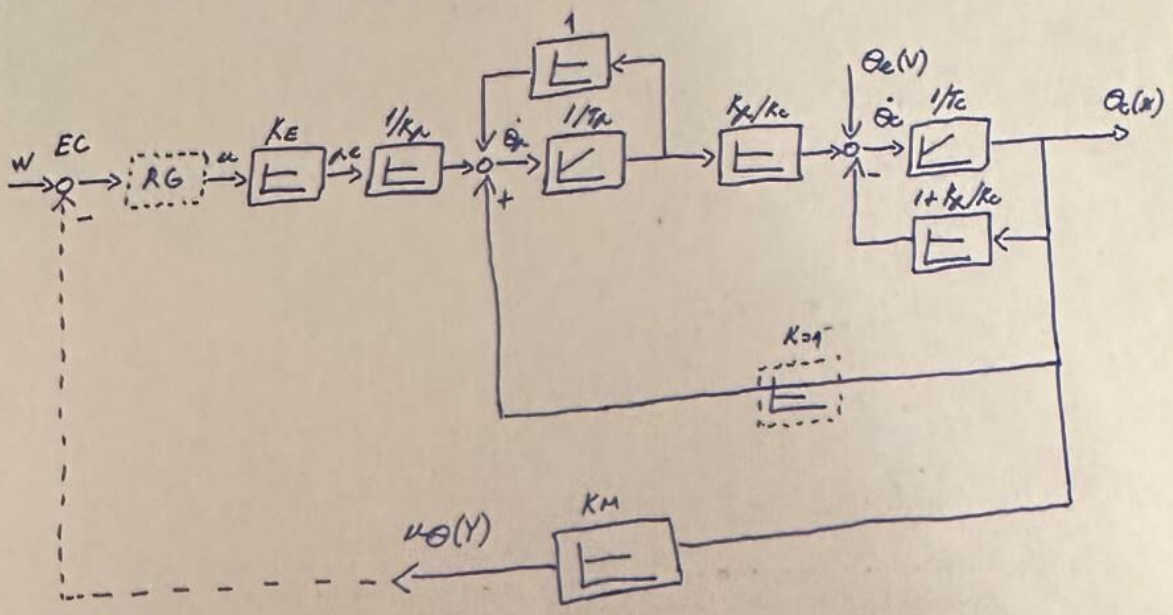

Proiectăm regulator folosind formula:

$$H_{RG} = \frac{k_r}{s}(1+s\cdot T_r),$$

$$k_r = \frac{1}{2\cdot k_{yc}\cdot T_\Sigma}\ ;\ T_r = T_{MAX}\ ;$$

Din Tema 2 $\Rightarrow H_{\mu v\Theta - u}(s)\big|_{Qe=0} = H_{123456798}(s) = \frac{1,6}{5(60s+1)^2-4}$

$$= \frac{1,6}{18000s^2+600s+1},$$

Dorim să aducem la o ecuație de forma: $(1+s\cdot T_1)(1+s\cdot T_2)$

la numitor, adică: $1+s(T_1+T_2)+s^2(T_1\cdot T_2)$

$$\Rightarrow \begin{cases} T_1\cdot T_2 = 18000 \\ T_1+T_2 = 600 \Rightarrow T_2 = 600-T_1 \end{cases}$$

$$\Rightarrow T_1(600-T_1) = 18000 \Rightarrow T_1^2 - 600T_1 + 18000 = 0$$

$$\Rightarrow T_{1,2} = \frac{-(-600) \pm \sqrt{(-600)^2 - 4 \cdot 1 \cdot 18000}}{2 \cdot 1}$$

$$T_{1,2} = \frac{600 \pm \sqrt{360000 - 72000}}{2}$$

$$T_{1,2} = \frac{600 \pm \sqrt{288000}}{2}$$

$$T_{1,2} = \frac{600 \pm 535,53}{2}$$

$$\Rightarrow T_1 = 32,24$$

$$T_2 = 567,76$$

$$\Rightarrow \frac{1,6}{18000s^2 + 600s + 1} = \frac{1,6}{(1+s \cdot 32,24)(1+s \cdot 567,76)}$$

$$\Rightarrow k_{RC} = 1,6$$

$$T_1 = 32,24$$

$$T_2 = 567,76$$

$$H_{RG} = \frac{k_R}{1}(1 + s \cdot T_R),$$

$$k_R = \frac{1}{2 \cdot k_{RC} \cdot T_\Sigma} = \frac{1}{2 \cdot 1,6 \cdot 32,24} = \frac{1}{103,168} = 0,0096$$

$$T_R = T_2 = 567,76 \quad (\text{da wenn } T_2 > T_1)$$

$$\Rightarrow H_{RG} = \frac{0,0096}{1}(1 + s 567,76) = \frac{0,0096}{1} + 5,5032$$