11

Using Bind Variables

Copyright © 2010, Oracle and/or its affiliates. All rights reserved.

Objectives

After completing this lesson, you should be able to:

- List the benefits of using bind variables
- Use bind peeking
- Use adaptive cursor sharing

Copyright © 2010, Oracle and/or its affiliates. All rights reserved.

Cursor Sharing and Different Literal Values

```
SELECT * FROM jobs WHERE min_salary > 12000;
SELECT * FROM jobs WHERE min_salary > 18000;
SELECT * FROM jobs WHERE min_salary > 7500;
```

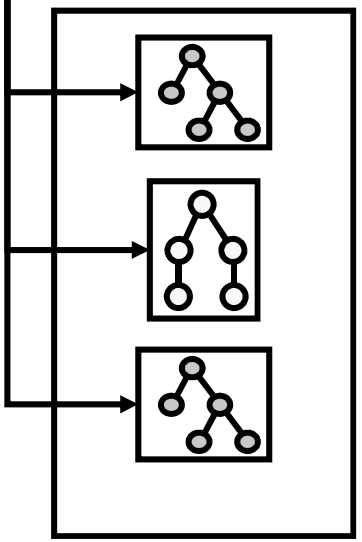

Library cache

Cursor sharing ✗

Copyright © 2010, Oracle and/or its affiliates. All rights reserved.

Cursor Sharing and Bind Variables

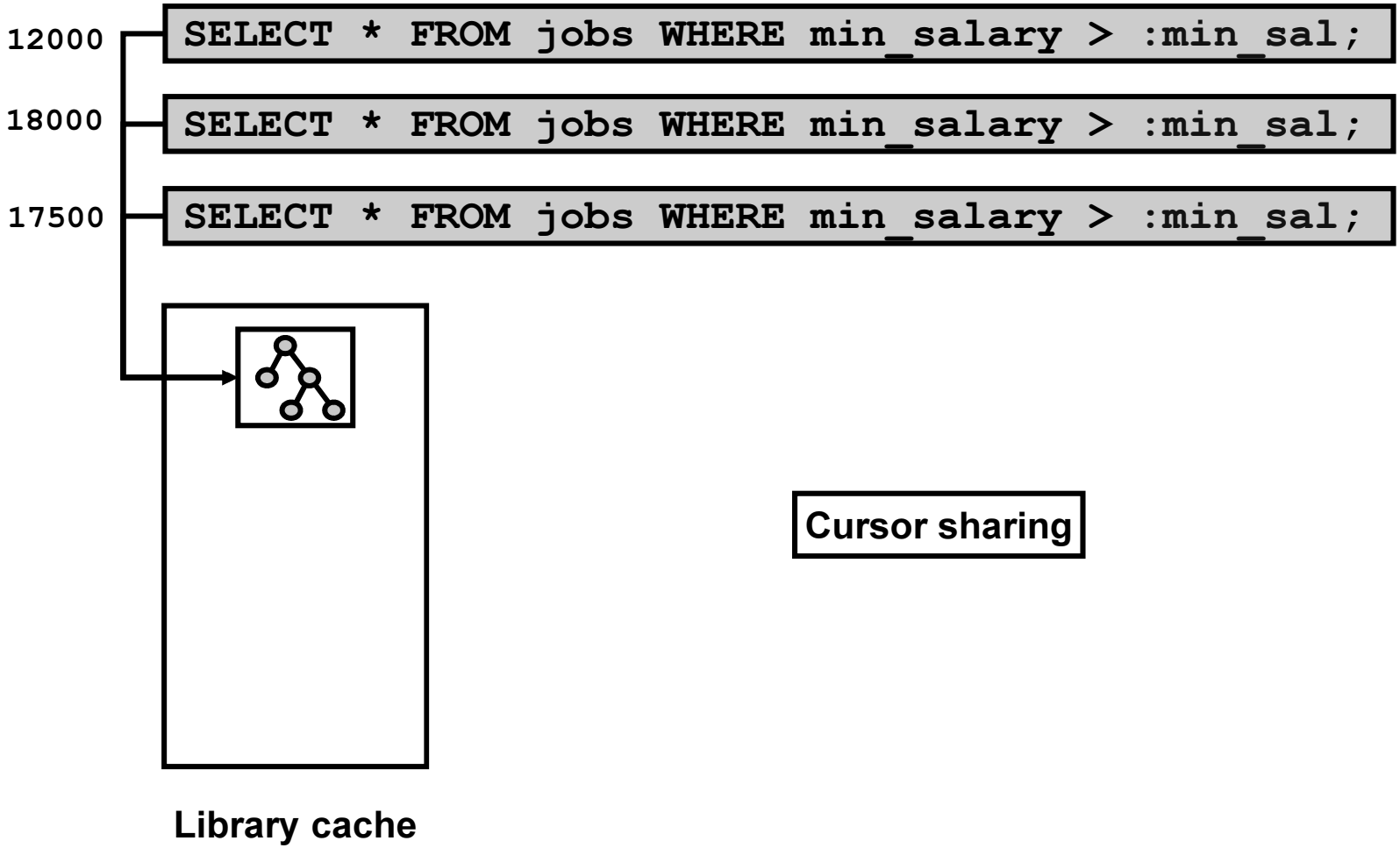

Copyright © 2010, Oracle and/or its affiliates. All rights reserved.

Bind Variables in SQL*Plus

```
SQL> variable job_id varchar2(10)
SQL> exec :job_id := 'SA_REP';

PL/SQL procedure successfully completed.

SQL> select count(*) from employees where job_id = :job_id;

  COUNT(*)
----------
        30

SQL> exec :job_id := 'AD_VP';

PL/SQL procedure successfully completed.

SQL> select count(*) from employees where job_id = :job_id;

  COUNT(*)
----------
         2
```


Copyright © 2010, Oracle and/or its affiliates. All rights reserved.

Bind Variables in Enterprise Manager

SQL Worksheet : orcl.us.oracle.com

Enter a SQL statement to execute. If there are multiple statements, the location of the cursor or a highlighted statement determines which will be executed. Statements should be separated with blank lines.

SQL Commands

select count(*) from hr.employees where salary between :low_sal and :hi_sal

Use bind variables for execution

Remove | Move Up | Move Down | Add 5 Rows | Remove All

Select	Value	Data Type
◉	5000	NUMBER
○	10000	NUMBER
○		STRING
○		STRING
○		STRING

☐ Auto commit

☐ Allow only SELECT statements

Execute

Last Executed SQL

```
select count(*)
from hr.employees
where salary between :low_sal and :hi_sal
```

Last Execution Details

SQL Repair Advisor | SQL Details | Schedule SQL Tuning Advisor

Results | Statistics | Plan

Execution Time (seconds) **0.0010**

COUNT(*)
43

Copyright © 2010, Oracle and/or its affiliates. All rights reserved.

Bind Variables in SQL Developer

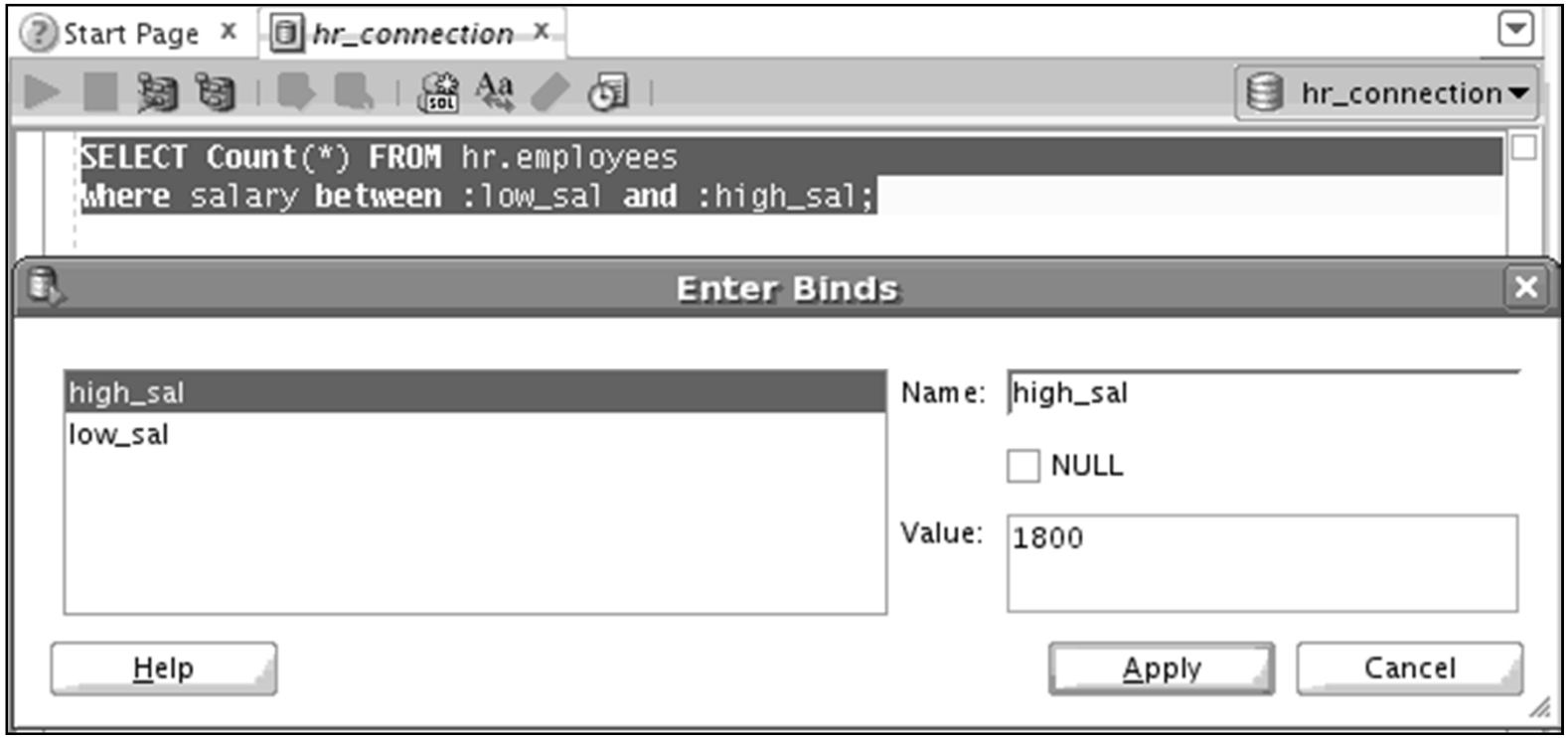

Copyright © 2010, Oracle and/or its affiliates. All rights reserved.

Bind Variable Peeking

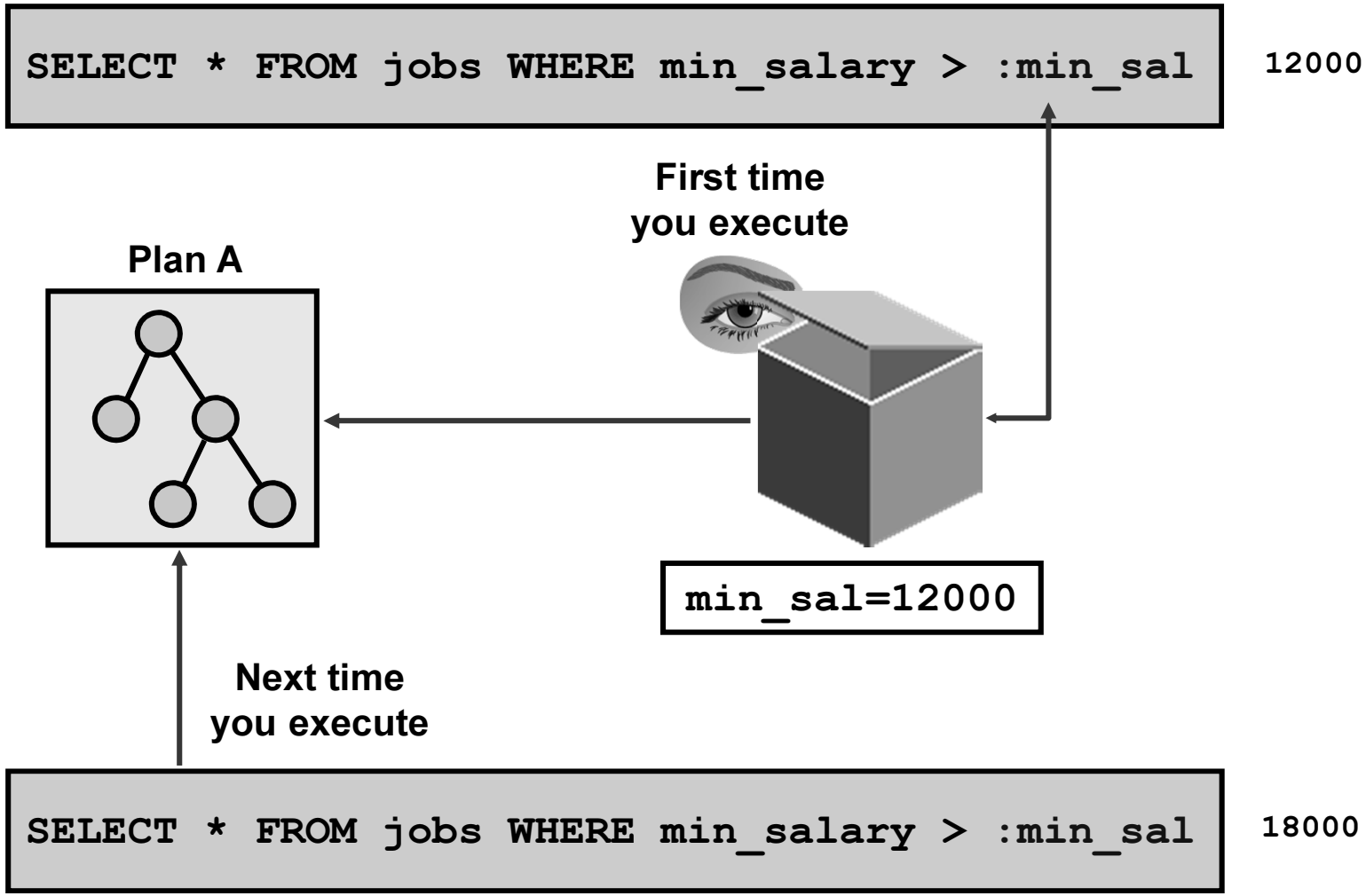

Copyright © 2010, Oracle and/or its affiliates. All rights reserved.

Bind Variable Peeking

```
SELECT * FROM jobs WHERE min_salary > :min_sal
```

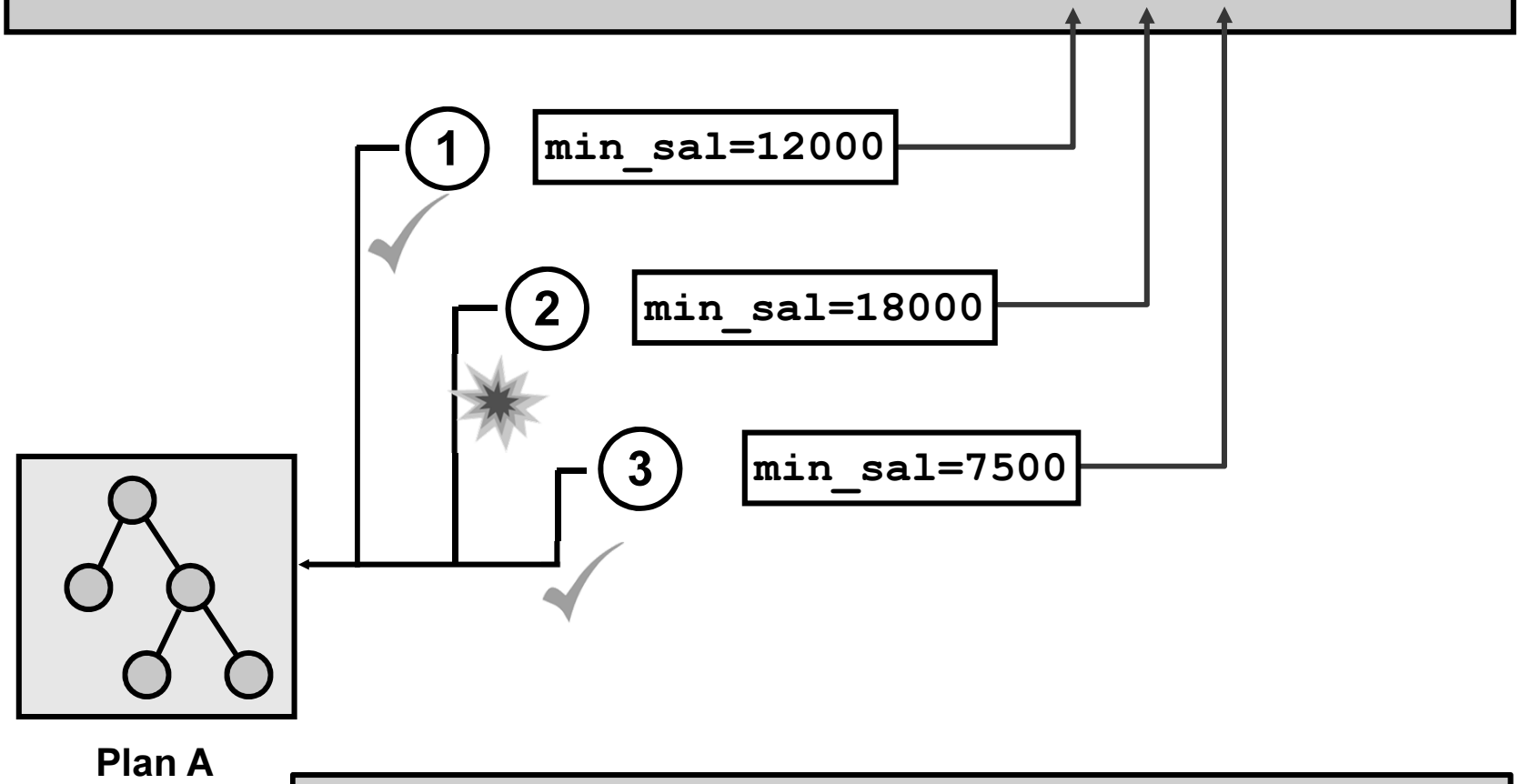

One plan not always appropriate for all bind values

Copyright © 2010, Oracle and/or its affiliates. All rights reserved.

Cursor Sharing Enhancements

- Oracle8*i* introduced the possibility of sharing SQL statements that differ only in literal values.
- Oracle9*i* extends this feature by limiting it to similar statements only, instead of forcing it.
- Similar: Regardless of the literal value, same execution plan

```
SQL> SELECT * FROM employees
  2  WHERE employee_id = 153;
```

- Not similar: Possible different execution plans for different literal values

```
SQL> SELECT * FROM employees
  2  WHERE department_id = 50;
```


Copyright © 2010, Oracle and/or its affiliates. All rights reserved.

Copyright © 2010, Oracle and/or its affiliates. All rights reserved.

The CURSOR_SHARING Parameter

- The CURSOR_SHARING parameter values:
  - FORCE
  - EXACT (default)
  - SIMILAR
- CURSOR_SHARING can be changed using:
  - ALTER SYSTEM
  - ALTER SESSION
  - Initialization parameter files
- The CURSOR_SHARING_EXACT hint

Copyright © 2010, Oracle and/or its affiliates. All rights reserved.

Forcing Cursor Sharing: Example

```
SQL> alter session set cursor_sharing = FORCE;
```

```
SELECT * FROM jobs WHERE min_salary > 12000;
SELECT * FROM jobs WHERE min_salary > 18000;
SELECT * FROM jobs WHERE min_salary > 7500;
```

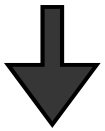

```
SELECT * FROM jobs WHERE min_salary > :"SYS_B_0"
```

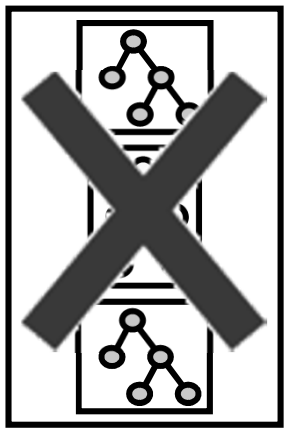

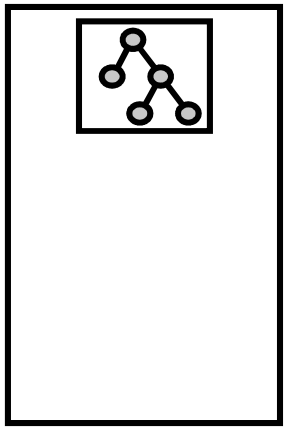

System-generated bind variable

Copyright © 2010, Oracle and/or its affiliates. All rights reserved.

Adaptive Cursor Sharing: Overview

Adaptive cursor sharing:

- Allows for intelligent cursor sharing for statements that use bind variables
- Is used to compromise between cursor sharing and optimization
- Has the following benefits:
  - Automatically detects when different executions would benefit from different execution plans
  - Limits the number of generated child cursors to a minimum
  - Provides an automated mechanism that cannot be turned off

Copyright © 2010, Oracle and/or its affiliates. All rights reserved.