SITRAK

# SITRAK-C9H

## 6x4 PRIME MOVER

# SITRAK-C9H 6x4 PRIME MOVER

| | | | |
|---|---|---|---|
| Weight Parameters | Kerb Weight (kg) | | 9400 |
| | Axle load（kg） | Front Axle | 5150 |
| | | Rear Axle | 4250 |
| | GVM(kg) | | 25000 |
| | GCM(kg) | | 90000 |
| | Design Axle Load(kg) | Front Axle | 7000 |
| | | Rear Axle | 18000 |
| Capability | Max speed (km/h) | | 100 |
| | Min. turning diameter (m) | | 18.5 |
| | Max gradeability (%) | | ≥35 |
| | Max parking grade (%) | | ≥20 |
| | fuel tank capacity (L) | | 1000 |
| Dimensions | Dimension | Long (mm) | 7042 |
| | | Width (mm) | 2500 |
| | | Hight (mm) ( Unload) | 3980 |
| | Wheelbase (mm) | | 3200+1400 |
| | wheel track (mm) | Front | 2041 |
| | | Rear | 1830 |
| | Approach angle (°) | | 14 |
| | Departure angle (°) | | 26 |
| | Front overhang (mm) | | 1492 |
| | Rear overhang (mm) | | 950 |
| | height of fifth wheel ground clearance (mm)（unload） | | 1240 |
| | Front/Rear fitting radius(mm) | | 2260/2010 |
| Cabin | Model | | C9H-E |
| | Passenger capacity | | 2 |
| | Turing radius (mm) | | 3040 |
| Engine | Model | | WP15H660E62A |
| | Displacement (L) | | 15.3 |
| | Power rating kW/(r/min) | | 485/1800 |
| | Max torque Nm/(r/min) | | 3200/1200-1400 |
| Clutch | Model | | 430 diaphragm model |
| | Operation | | Electronically Controlled Pneumatic Power Assist Operation |

| | | | |
|---|---|---|---|
| Transmission | Model | | ZF 12TX3221TO |
| | Ratio (forward) | | 12.924,9.982,7.688,5.938,4.565, 3.526,2.831,2.187,1.684,1.301, 1.000,0.772; |
| | Ratio (reverse) | | 12.033,9.293 |
| Driving axle | Model | | MCY13BES |
| | Main drive Ratio | Ratio | 3.08 |
| | Diff. lock | | interwheel & interaxle diff. lock |
| Front axle | Model | | VPD75ES |
| Tire | Rim | | Front 22.5×9.0，Rear 22.5×8.25 |
| | Types | | Front 295/80R22.5 Rear 11R22.5 |
| Frame | Model | | ladder framework |
| | Main beam cross-section (mm) | | C type 270×85×8 |
| | Side beam cross section (mm) | | - |
| | Width of frame (mm) | | Front 940 Rear 760 |
| Suspension | Model | | Non-independence suspension |
| | Front | Parabolic springs | 3 |
| | Rear | air suspension | 8 air springs |
| Steering | Model | | Recirculating ball hydraulic power Steering wheel |
| | Ratio | | 17 ～ 20:1 |
| | Max pressure of pump (kPa) | | 18300 |
| | Steering way | | Steering wheel |
| Braking system | Working pressure (kPa) | | 1250 |
| | Service Braking type | | Dual circuit compressed air brake |
| | Brake power adjust type | | EBS+ESC+HSA |
| | Parking brake type | | Spring stored energy air cut brake |
| Electrics | Circuit type | | dual |
| | Operating voltage (V) | | 24 |
| | Generator power (kW) | | 3 |
| | Batteries (V/Ah) | | 2×12/240 |
| other specification | NH/4c PTO（matched with ZF Traxon transmission/gear ratio1.11/430Nm/direct drive） ACC+AEBS+LDW | | |
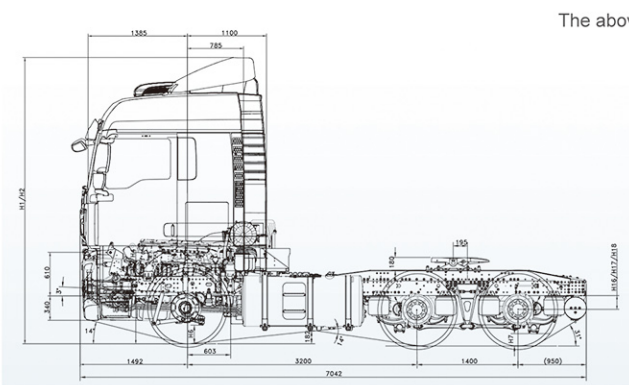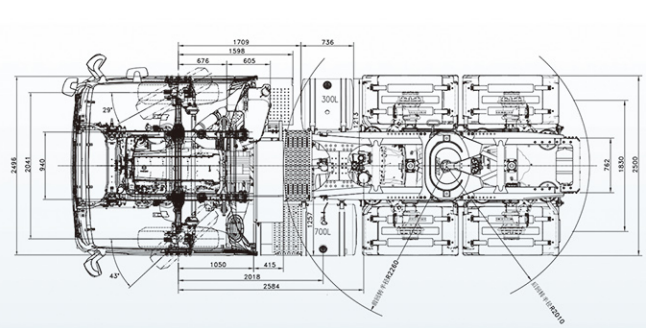
The above technical parameters are for reference only. Any changes will not be notified separately