SITRAK

SITRAK-G5S

4x2 Cargo Cab & Chassis

SITRAK-G5S 4x2 Cargo

Weight Parameters	Kerb Weight (kg)		5760
	Axle load（kg）	Front Axle	3860
		Rear Axle	1900
	GVM(kg)		18000
	Design Axle Load(kg)	Front Axle	7000
		Rear Axle	11000
Capability	Max speed (km/h)		100
	Min. turning diameter (m)		19.4
	Max gradeability (%)		≥30
	Max parking grade (%)		≥20
	fuel tank capacity (L)		300
Dimensions	Dimension	Long (mm)	9290
		Width (mm)	2490
		Hight (mm)(Unload)	3145
	Wheelbase (mm)		6000
	wheel track (mm)	Front	2072
		Rear	1870
	Approach angle (°)		15
	Departure angle (°)		12
	Front overhang (mm)		1430
	Rear overhang (mm)		1860
	height of fifth wheel ground clearance (mm)（unload）		-
	Front/Rear fitting radius(mm)		-
Cabin	Model		G5S-M
	Passenger capacity		2
	Turing radius (mm)		2410
Engine	Model		MC07H.31-61
	Displacement (L)		7.36
	Power rating kW/(r/min)		228/2200
	Max torque Nm/(r/min)		1262/1200~1700
Clutch	Model		None
	Operation		/

Transmission	Model		Allison 3000
	Ratio (forward)		3.49，1.86，1.41，1.00，0.75，0.65
	Ratio (reverse)		5.03
Driving axle	Model		MCY11BES
	Main drive Ratio		Ratio
	Diff. lock		interwheel & interaxle diff. lock
Front axle	Model		VPD71DS
Tire	Rim		Front 22.5×9.0 aluminium，Rear 22.5×8.25 aluminium
	Types		Front 295/80R22.5-18PR Rear 11R22.5-16PR
Frame	Model		A trapezoidal frame with a wide front and narrow rear
	Main beam cross-section (mm)		Slot Type250×80×6
	Side beam cross section (mm)		Slot Type236×70×4
	Width of frame (mm)		Front 965 Rear 850
Suspension	Model		Non-independence suspension
	Front	Parabolic springs	3
	Rear	air suspension	4 air bag
Steering	Model		Recirculating ball hydraulic power Steering wheel
	Ratio		22.2 ～ 26.2:1
	Max pressure of pump (kPa)		20000
	Steering way		Steering wheel
Braking system	Working pressure (kPa)		1250
	Service Braking type		Dual circuit compressed air brake
	Brake power adjust type		EBS+ESC
	Parking brake type		Spring stored energy air cut brake
Electrics	Circuit type		dual
	Operating voltage (V)		24
	Generator power (kW)		3
	Batteries (V/Ah)		2×12/180
other specification	AEBS+LDW		
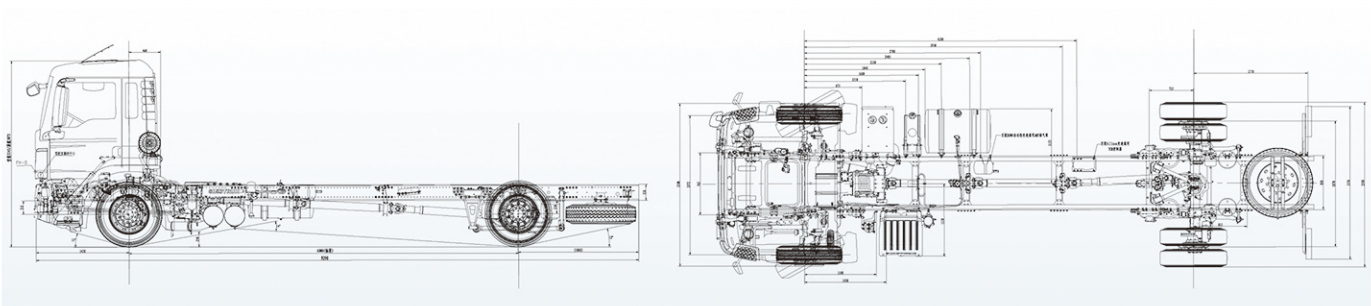
The above technical parameters are for reference only. Any changes will not be notified separately