SITRAK-G5S

6x4 Tipper Cab & Chassis

SITRAK-G5S 6x4 Tipper

Weight Parameters	Kerb Weight (kg)		7250	Transmission	Model	Allison 3200P	
	Axle load（kg）	Front Axle	4150		Ratio (forward)	3.49，1.86，1.41，1.00，0.75，0.65	
		Rear Axle	3100				
	GVM(kg)		24000		Ratio (reverse)	5.03	
	Design Axle Load(kg)	Front Axle	7000 (Total)		Model	MCY11BES	
		Rear Axle	18000 (Total)	Driving axle	Main drive Ratio	Ratio	5.29
Capability	Max speed (km/h)		100		Diff. lock	Interwheel & Interaxle diff lock	
	Min. turning diameter (m)		18	Front axle	Model	VPD71DS	
	Max gradeability (%)		≥25	Tire	Rim	Front 22.5×9.0 aluminium，Rear 22.5×8.25 aluminium	
	Max parking grade (%)		≥18				
	fuel tank capacity (L)		300		Types	Front 295/80R22.5-18PR Rear 11R22.5-16PR	
Dimensions	Dimension	Long (mm)	7450	Frame	Model	A trapezoidal frame with a wide front and narrow rear	
		Width (mm)tt	2488				
		Hight (mm)(Unload)	3155		Main beam cross-section (mm)	Slot Type 280×80×8	
	Wheelbase (mm)		3600+1400		Side beam cross section (mm)	-	
	wheel track (mm)	Front	2065		Width of frame (mm)	Front 940 Rear 850	
		Rear	1850	Suspension	Model	Non-independence suspension	
	Approach angle (°)		13		Front	Parabolic springs	3
	Departure angle (°)		33		Rear	air suspension	2+-/2+-
	Front overhang (mm)		1450	Steering	Model	Recirculating ball hydraulic power Steering wheel	
	Rear overhang (mm)		1000		Ratio	22.2 ～ 26.2:1	
	height of fifth wheel ground clearance (mm)（unload）		-		Max pressure of pump (kPa)	20000	
	Front/Rear fitting radius(mm)		-		Steering way	Steering wheel	
Cabin	Model		G5S-M	Braking system	Working pressure (kPa)	1250	
	Passenger capacity		2		Service Braking type	Dual circuit compressed air brake	
	Turing radius (mm)		2410		Brake power adjust type	EBS+ESC+HSA	
Engine	Model		MC07H.31-61		Parking brake type	Spring stored energy air cut brake	
	Displacement (L)		7.36	Electrics	Circuit type	dual	
	Power rating kW/(r/min)		225/2200		Operating voltage (V)	24	
	Max torque Nm/(r/min)		1250/1200-1700		Generator power (kW)	3.08	
Clutch	Model		/		Batteries (V/Ah)	2×12/180	
	Operation		/	other specification	AEBS+LDW		
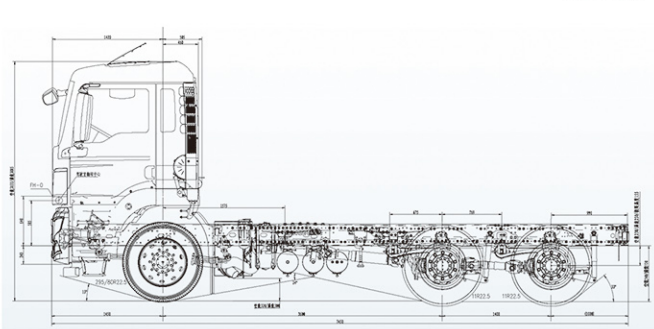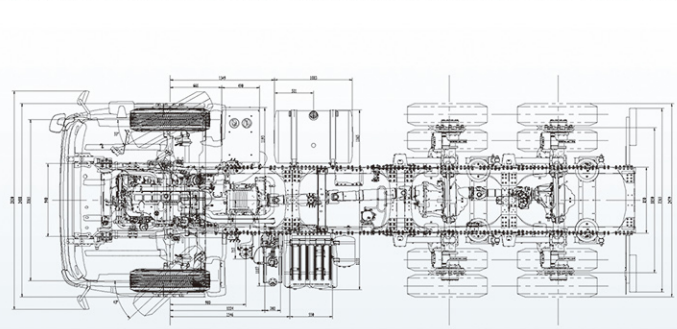
The above technical parameters are for reference only. Any changes will not be notified separately