SITRAK

SITRAK-G5S

8x4 Tipper Cab & Chassis

SITRAK-G5S 8x4 Tipper

Weight Parameters	Kerb Weight (kg)		8290
	Axle load（kg）	Front Axle	5482
		Rear Axle	2808
	GVM(kg)		31000
	Design Axle Load(kg)	Front Axle	13000(Total)
		Rear Axle	18000(Total)
Capability	Max speed (km/h)		100
	Min. turning diameter (m)		22.5
	Max gradeability (%)		≥25
	Max parking grade (%)		≥18
	fuel tank capacity (L)		220
Dimensions	Dimension	Long (mm)	8775
		Width (mm)	2489
		Hight (mm)(Unload)	3155
	Wheelbase (mm)		1800+3300+1400
	wheel track (mm)	Front	2065
		Rear	1850
	Approach angle (°)		13
	Departure angle (°)		33
	Front overhang (mm)		1450
	Rear overhang (mm)		825
	height of fifth wheel ground clearance (mm)（unload）		-
	Front/Rear fitting radius(mm)		-
Cabin	Model		G5S-M
	Passenger capacity		2
	Turing radius (mm)		2410
Engine	Model		MC07H.35-61
	Displacement (L)		7.36
	Power rating kW/(r/min)		254/2200
	Max torque Nm/(r/min)		1400/(1200~1600)
Clutch	Model		/
	Operation		/

Transmission	Model		Allison 4430P
	Ratio (forward)		4.70,2.21,1.53,1.00,0.76,0.67
	Ratio (reverse)		5.55
Driving axle	Model		MCY11BES
	Main drive Ratio	Ratio	5.29
	Diff. lock		Interwheel & Interaxle diff lock
Front axle	Model		VPD71DS
Tire	Rim		Front 22.5×9.0 aluminium, Rear 22.5×8.25 aluminium
	Types		Front 295/80R22.5-18PR Rear 11R22.5-16PR
Frame	Model		A trapezoidal frame with a wide front and narrow rear
	Main beam cross-section (mm)		Slot Type 280×80×8
	Side beam cross section (mm)		-
	Width of frame (mm)		Front 940 Rear 850
Suspension	Model		Non-independence suspension
	Front	Parabolic springs	3/3
	Rear	air suspension	2+-/2+-
Steering	Model		Recirculating ball hydraulic power Steering wheel
	Ratio		22.2 ～ 26.2:1
	Max pressure of pump (kPa)		20000
	Steering way		Steering wheel
Braking system	Working pressure (kPa)		1250
	Service Braking type		Dual circuit compressed air brake
	Brake power adjust type		EBS+ESC+HSA
	Parking brake type		Spring stored energy air cut brake
Electrics	Circuit type		dual
	Operating voltage (V)		24
	Generator power (kW)		3.08
	Batteries (V/Ah)		2×12/180
other specification	AEBS+LDW		
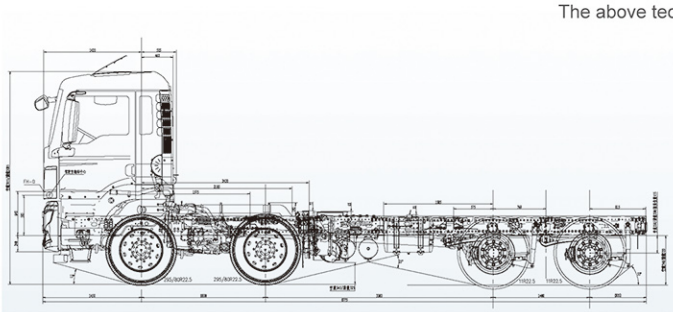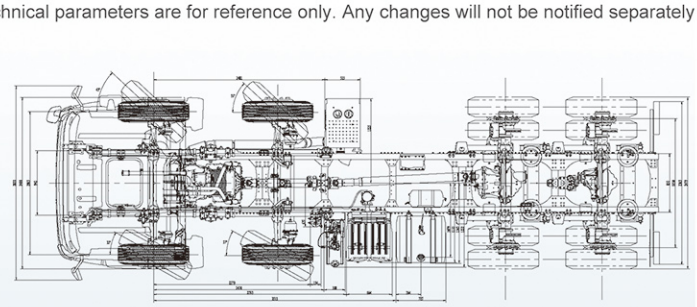
The above technical parameters are for reference only. Any changes will not be notified separately