SITRAK-G7S

6x4 PRIME MOVER

SITRAK-G7S 6x4 PRIME MOVER

Weight Parameters	Kerb Weight (kg)		8800
	Axle load（kg）	Front Axle	4820
		Rear Axle	3980
	GVM(kg)		25000
	Design Axle Load(kg)	Front Axle	7000
		Rear Axle	18000
Capability	Max speed (km/h)		100
	Min. turning diameter (m)		15.5
	Max gradeability (%)		≥30
	Max parking grade (%)		≥20
	fuel tank capacity (L)		700+240
Dimensions	Dimension	Long (mm)	7042
		Width (mm)	2500
		Hight (mm)(Unload)	3980
	Wheelbase (mm)		3200+1400
	wheel track (mm)	Front	2041
		Rear	1842
	Approach angle (°)		19
	Departure angle (°)		22
	Front overhang (mm)		1492
	Rear overhang (mm)		950
	height of fifth wheel ground clearance (mm)（unload）		1250
	Front/Rear fitting radius(mm)		2280/1961
Cabin	Model		G7S-E
	Passenger capacity		2
	Turing radius (mm)		3040
Engine	Model		MC13.54-61
	Displacement (L)		12.42
	Power rating kW/(r/min)		400/1800
	Max torque Nm/(r/min)		2500/950-1400
Clutch	Model		430 Push-Type Diaphragm Spring Clutch
	Operation		Electronically Controlled Pneumatic Power Assist Operation

Transmission	Model		ZF 12TX2621TD
	Ratio (forward)		16.688,12.924,9.926,7.688,5.895,4.656,3.655,2.831,2.174,1.684,1.291,1.00
	Ratio (reverse)		15.537,12.033
Driving axle	Model		MCY13BES
	Main drive Ratio	Ratio	3.08/3.36/3.7
	Diff. lock		interwheel & interaxle diff. lock
Front axle	Model		VPD71DS
Tire	Rim		Front 22.5×9.0 aluminium alloy，Rear 22.5×8.25 aluminium alloy
	Types		Front 295/80R22.5 Rear 11R22.5
Frame	Model		A trapezoidal frame with a wide front and narrow rear
	Main beam cross-section (mm)		Slot Type 270×85×8
	Side beam cross section (mm)		-
	Width of frame (mm)		Front 942 Rear 762
Suspension	Model		Non-independence suspension
	Front	Parabolic springs	3
	Rear	air suspension	8 air springs
Steering	Model		Recirculating ball hydraulic power Steering wheel
	Ratio		17 ～ 20:1
	Max pressure of pump (kPa)		20000
	Steering way		Steering wheel
Braking system	Working pressure (kPa)		1250
	Service Braking type		Dual circuit compressed air brake
	Brake power adjust type		EBS+ESC+HSA
	Parking brake type		Spring stored energy air cut brake
Electrics	Circuit type		dual
	Operating voltage (V)		24
	Generator power (kW)		3
	Batteries (V/Ah)		2×12/240
other specification	NH/4c PTO（matched with ZF Traxon transmission/gear ratio0.78/430Nm/direct drive） ACC+AEBS+LDW		
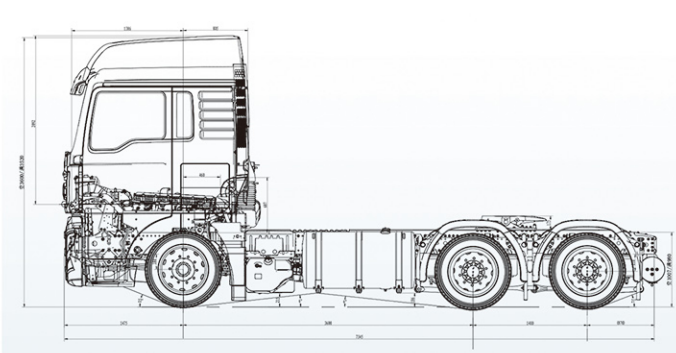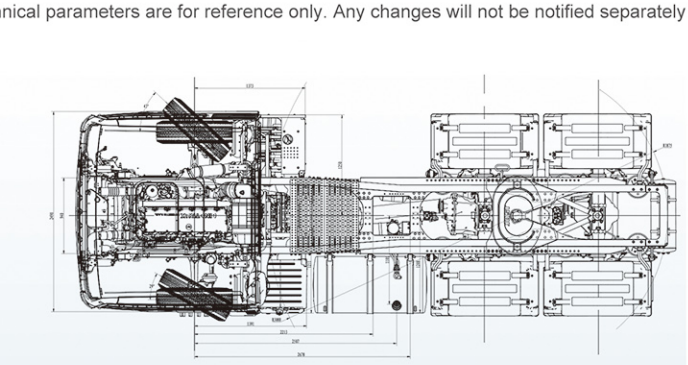
The above technical parameters are for reference only. Any changes will not be notified separately