SITRAK

SITRAK-G7S

6x4 Tipper Cab & Chassis

SITRAK-G7S 6x4 Tipper

Weight Parameters	Kerb Weight (kg)		9400
	Axle load（kg）	Front Axle	5400
		Rear Axle	4000
	GVM(kg)		25000
	Design Axle Load(kg)	Front Axle	7000
		Rear Axle	18000
Capability	Max speed (km/h)		100
	Min. turning diameter (m)		17.8
	Max gradeability (%)		25
	Max parking grade (%)		18
	fuel tank capacity (L)		600
Dimensions	Dimension	Long (mm)	7492
		Width (mm)	2492
		Hight (mm)(Unload)	3471
	Wheelbase (mm)		3600+1400
	wheel track (mm)	Front	2045
		Rear	1872
	Approach angle (°)		16
	Departure angle (°)		24
	Front overhang (mm)		1492
	Rear overhang (mm)		1000
	height of fifth wheel ground clearance (mm)（unload）		-
	Front/Rear fitting radius(mm)		-
Cabin	Model		G7S-P
	Passenger capacity		2
	Turing radius (mm)		2807
Engine	Model		MC13.54-61 TD
	Displacement (L)		12.419
	Power rating kW/(r/min)		400/1800
	Max torque Nm/(r/min)		2500/1000-1400
Clutch	Model		430 Push-Type Diaphragm Spring Clutch
	Operation		Electronically Controlled Pneumatic Power Assist Operation

Transmis-sion	Model		ZF 12TX2621TD
	Ratio (forward)		16.688，12.924，9.926，7.688，5.895，4.565，3.655，2.831，2.174，1.684，1.291，1.000
	Ratio (reverse)		15.537，12.033
Driving axle	Model		MCY13BES
	Main drive Ratio	Ratio	3.08
	Diff. lock		Interwheel & Interaxle diff lock
Front axle	Model		VPD71DS
Tire	Rim		Front 22.5×9.0 aluminium alloy，Rear 22.5×8.25 aluminium alloy
	Types		Front 295/80R22.5-18PR Rear 11R22.5-16PR
Frame	Model		A trapezoidal frame with a wide front and narrow rear
	Main beam cross-section (mm)		Slot Type 300×80×8
	Side beam cross section (mm)		-
	Width of frame (mm)		Front 940 Rear 850
Suspension	Model		Non-independence suspension
	Front	Parabolic springs	3
	Rear	air suspension	8 air bag
Steering	Model		Recirculating ball hydraulic power Steering wheel
	Ratio		17 ～ 20:1
	Max pressure of pump (kPa)		18300
	Steering way		Steering wheel
Braking system	Working pressure (kPa)		1250
	Service Braking type		Dual circuit compressed air brake
	Brake power adjust type		EBS+ESC+HSA
	Parking brake type		Spring stored energy air cut brake
Electrics	Circuit type		dual
	Operating voltage (V)		24
	Generator power (kW)		3
	Batteries (V/Ah)		2×12/240
other specification	ACC+AEBS+LDW		
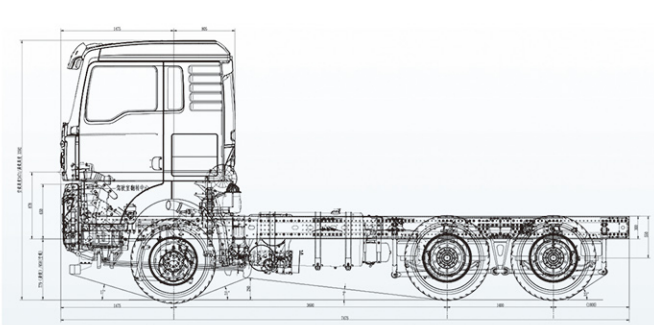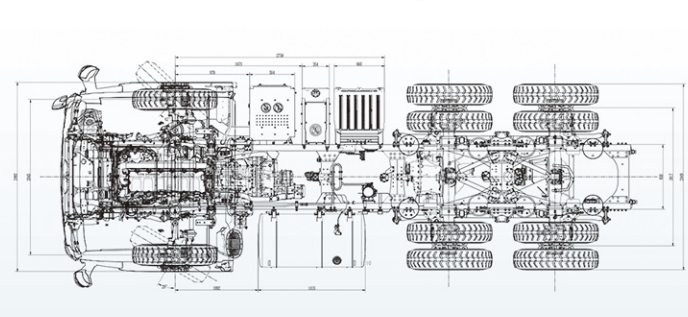
The above technical parameters are for reference only. Any changes will not be notified separately