RevNo	Revision note	Date	Signature	Checked

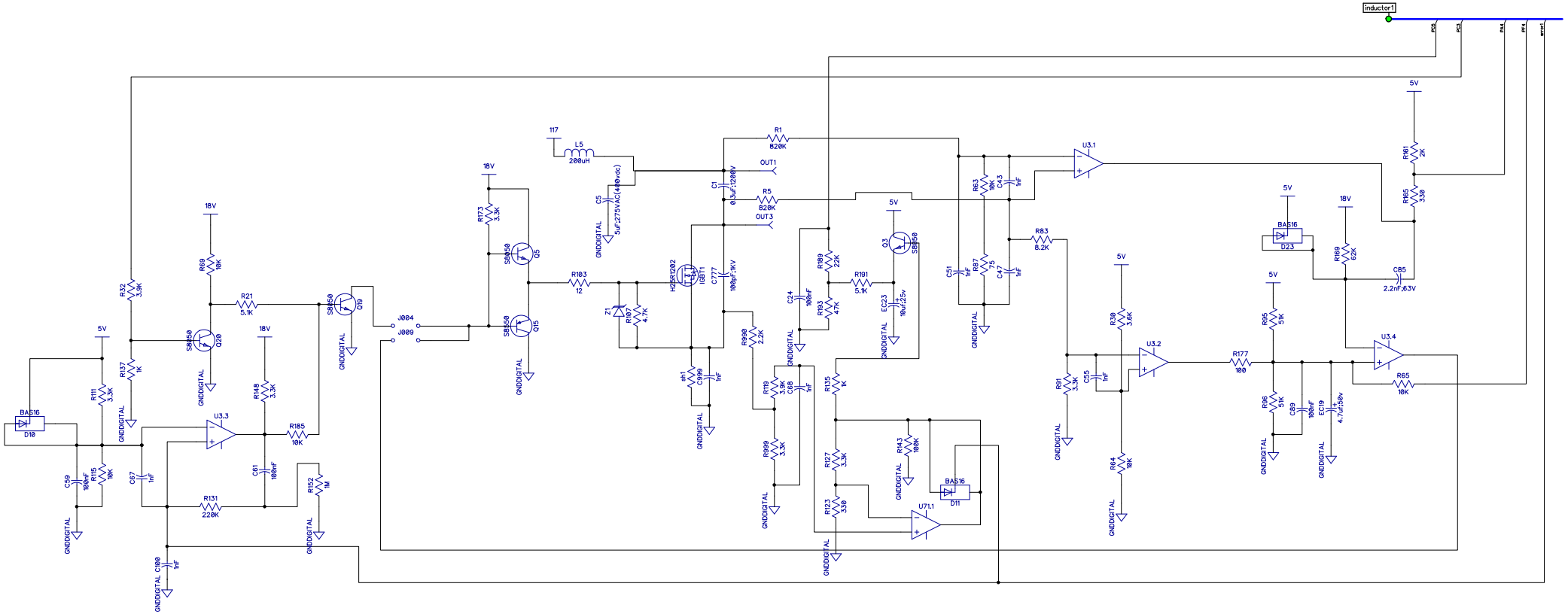

Itemref	Quantity	Title/Name, designation, material, dimension etc		Article No./Reference	
Designed by	Checked by	Approved by - date - 00/00/00	File name	Date 00/00/00	Scale 1:1
				Edition 0	Sheet 1/1

RevNo	Revision note	Date	Signature	Checked

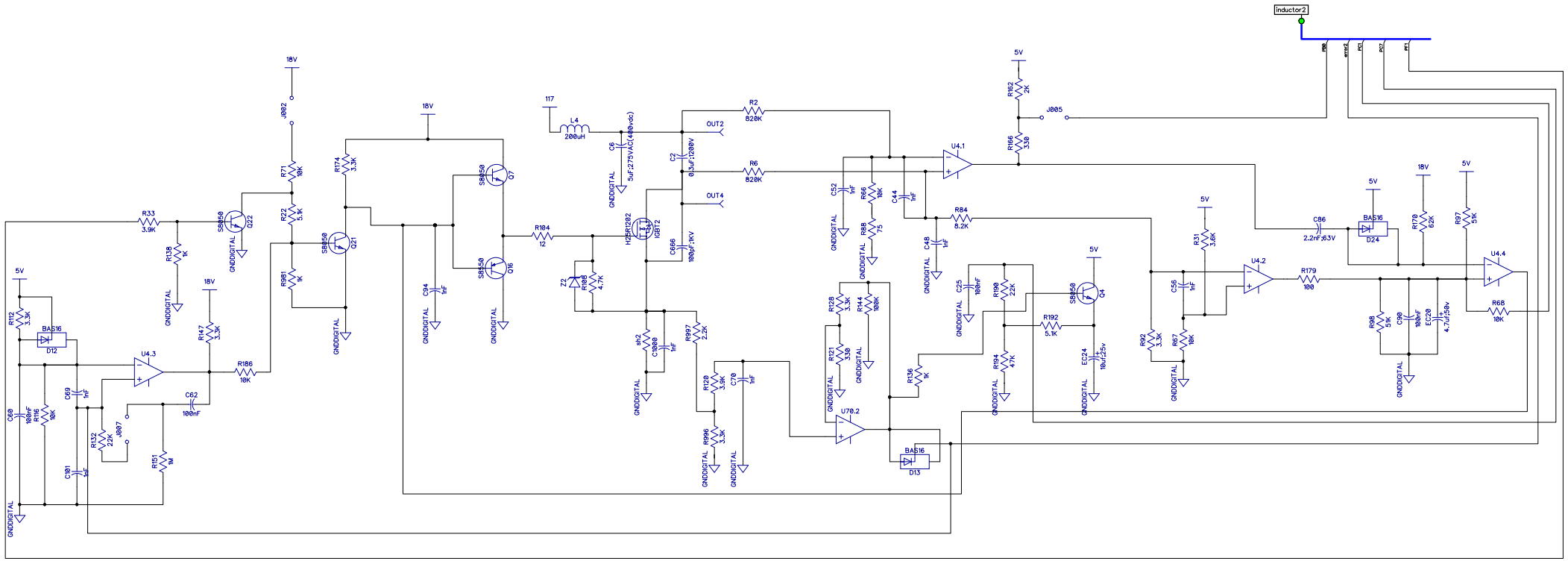

Itemref	Quantity	Title/Name, designation, material, dimension etc		Article No./Reference	
Designed by	Checked by	Approved by - date - 00/00/00	File name	Date 00/00/00	Scale 1:1
				Edition 0	Sheet 1/1

RevNo	Revision note	Date	Signature	Checked

PC3 - индукция включение индуктор 1

PF1 - индукция включение индуктор 2

PF4 - PWM A индуктор 1

PC1 - PWM B индуктор 2

RT1 select PF7 port analog in PC0 Ain12

RT2 select PF6 port analog in PC0 Ain12

CN3 analog in PF0 Ain8

CN4 analog in PD1 Ain1

I IGBT1 ain 14 PC5

I IGBT2 ain 15 PC7

U recifler Ain 0 PD0

Pb0 ind2 pan

PA4 ind1 pan !!!!! change to PB4

q5 q15 q7 q16 change ir4427

r174 r173 add capacitor 1000pf gnd

rt1 rt2 thermistor mounts reworked through copper plate

r990 r997 2.2k change 1.3k

q3 q4 change to dl4418 bat85

r191 r192 change 3.9k

r161 r162 2k change to 2,2k

r165 r166 330 change to 120

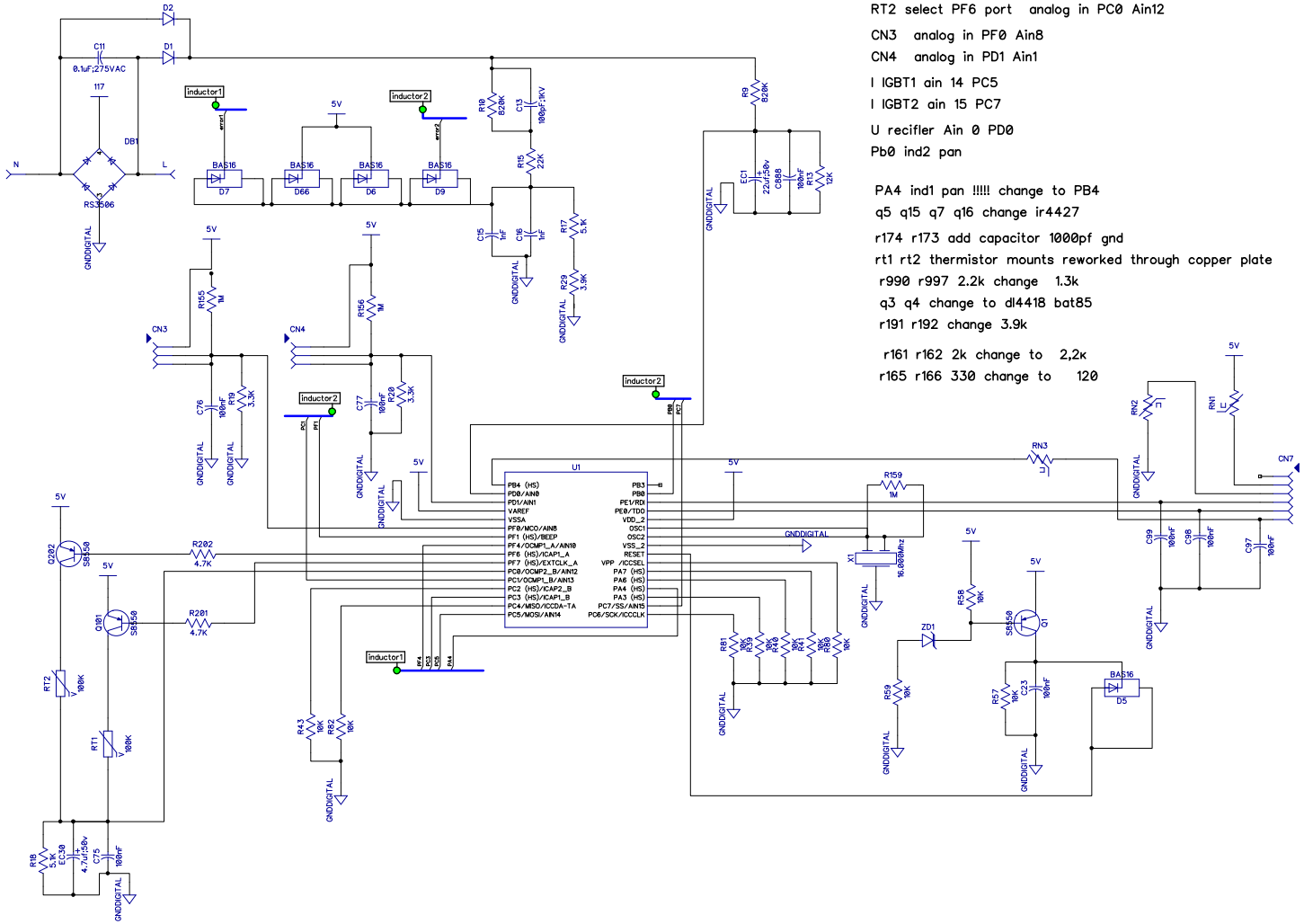

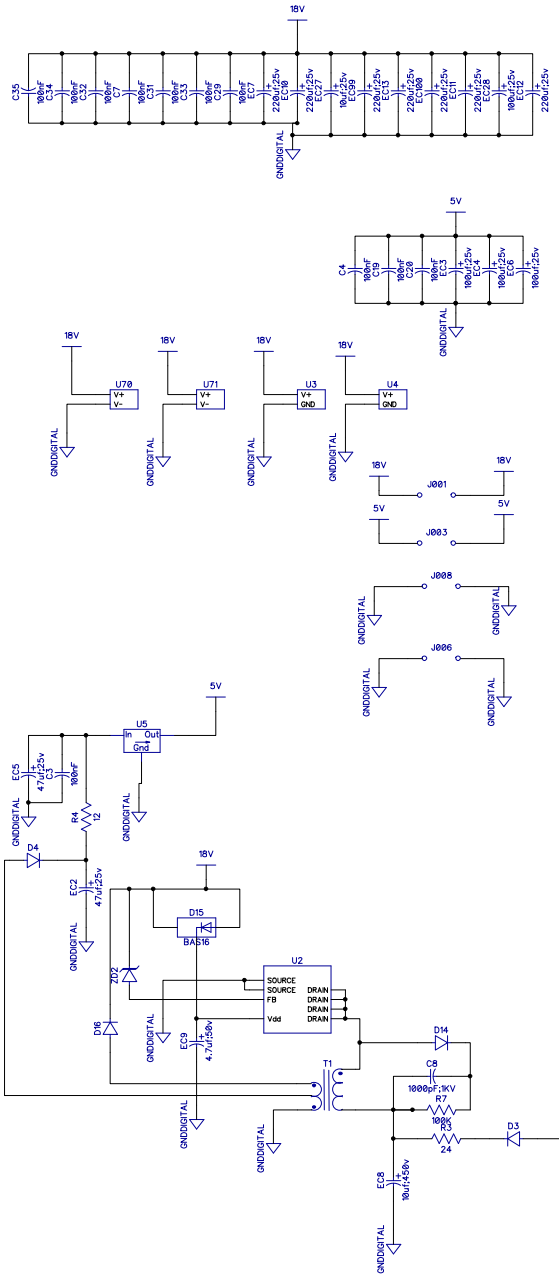

Itemref	Quantity	Title/Name, designation, material, dimension etc		Article No./Reference	
Designed by	Checked by	Approved by - date - 00/00/00	File name	Date 00/00/00	Scale 1:1
				Edition 0	Sheet 1/1