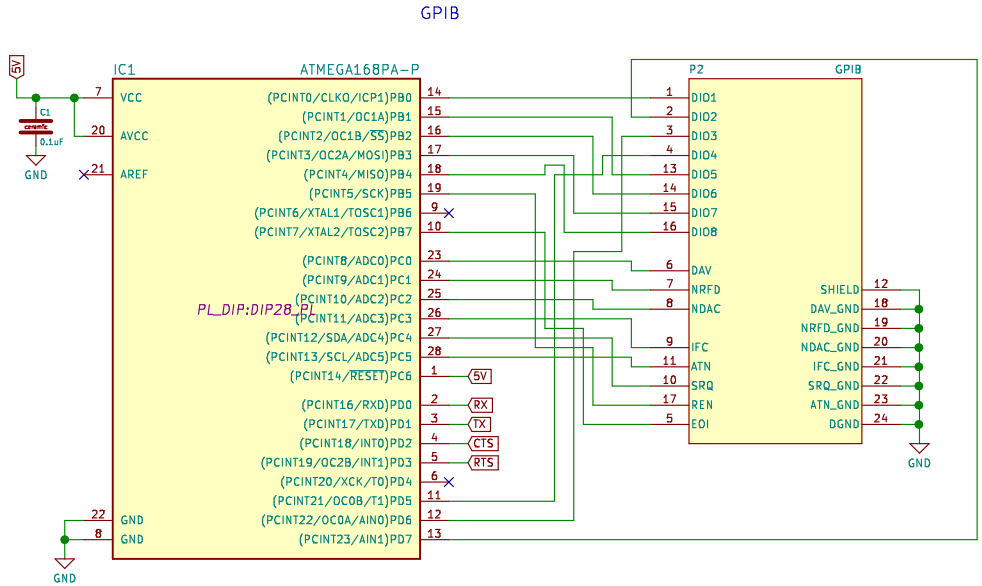


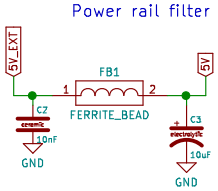


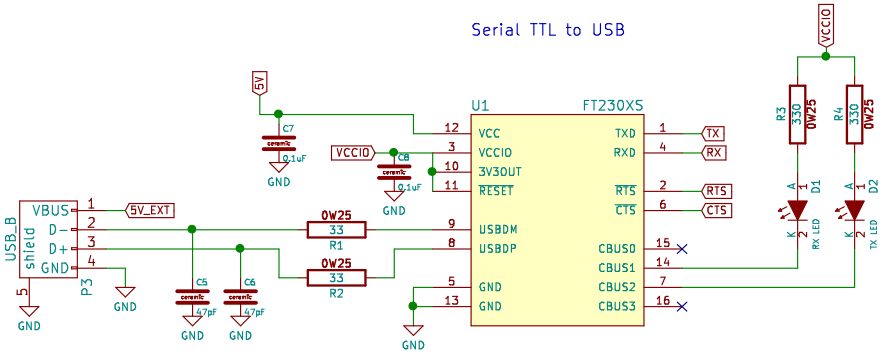


Sheet: /
File: atmega-gpib.sch

**Title:**

| Size: A4 | Date: | Rev: |
|---|---|---|
| KiCad E.D.A. kicad 4.0.5+dfsg1-4bpo8+1 | | Id: 1/1 |