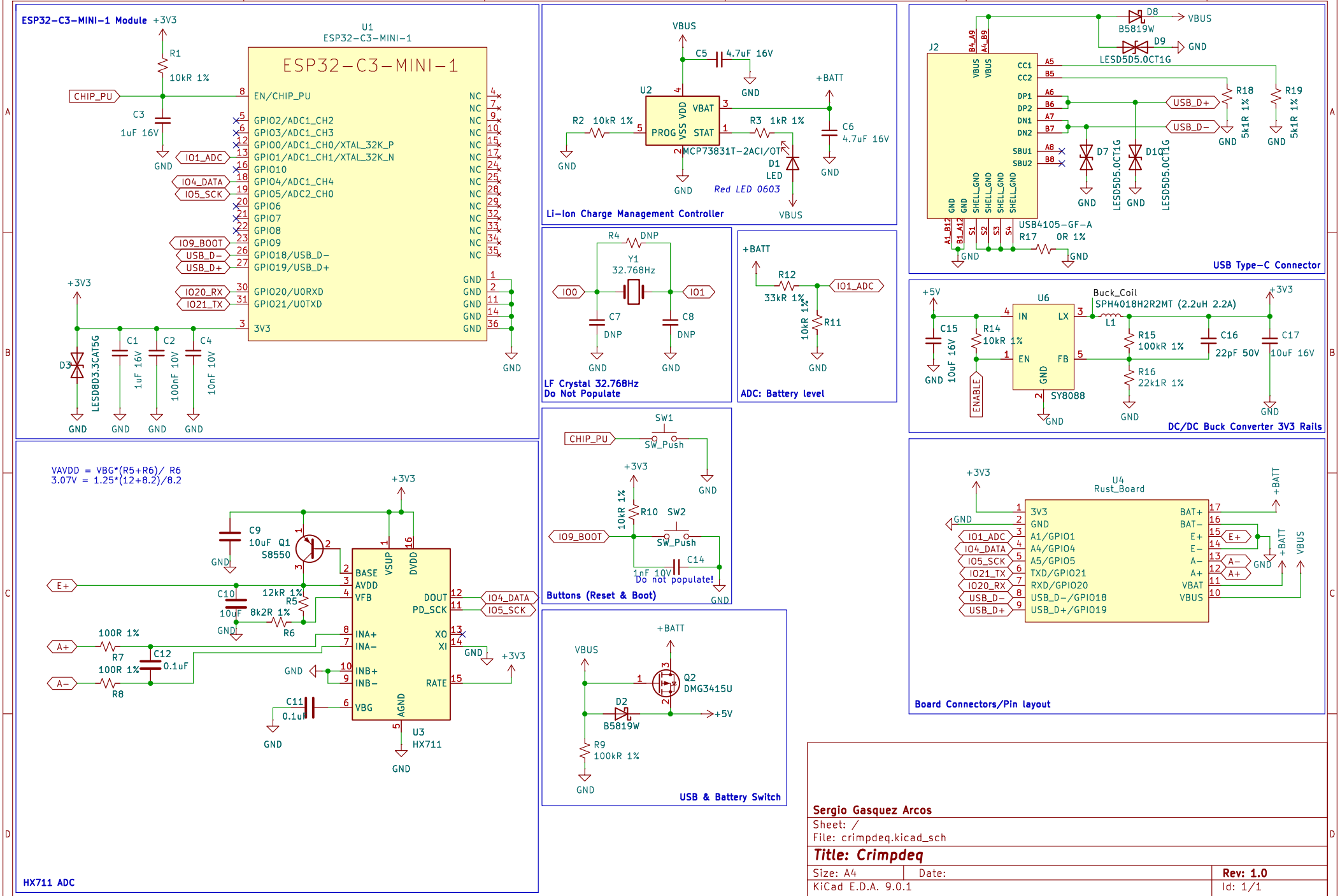
ESP32-C3-MINI-1 Module
U1
ESP32-C3-MINI-1
EN/CHIP_PU
GPIO2/ADC1_CH2
GPIO3/ADC1_CH3
GPIO0/ADC1_CH0/XTAL_32K_P
GPIO1/ADC1_CH1/XTAL_32K_N
GPIO10
GPIO4/ADC1_CH4
GPIO5/ADC2_CH0
GPIO6
GPIO7
GPIO8
GPIO9
GPIO18/USB_D-
GPIO19/USB_D+
GPIO20/U0RXD
GPIO21/U0TXD
3V3
CHIP_PU
IO1_ADC
IO4_DATA
IO5_SCK
IO9_BOOT
USB_D-
USB_D+
IO20_RX
IO21_TX
R1 10kR 1%
C3 1uF 16V
D3 LESD8D3.3CAT5G
C1 1uF 16V
C2 100nF 10V
C4 10nF 10V
Li-Ion Charge Management Controller
U2
MCP73831T-2ACI/OT
VBUS
C5 4.7uF 16V
R2 10kR 1%
R3 1kR 1%
C6 4.7uF 16V
D1 LED
Red LED 0603
+BATT
LF Crystal 32.768Hz
Do Not Populate
Y1 32.768Hz
R4 DNP
C7 DNP
C8 DNP
ADC: Battery level
R12 33kR 1%
R11 10kR 1%
USB Type-C Connector
J2
USB4105-GF-A
D8 B5819W
D9 LESD5D5.0CT1G
D7 LESD5D5.0CT1G
D10 LESD5D5.0CT1G
R18 5k1R 1%
R19 5k1R 1%
R17 0R 1%
DC/DC Buck Converter 3V3 Rails
U6
SY8088
Buck_Coil
SPH4018H2R2MT (2.2uH 2.2A)
L1
C15 10uF 16V
R14 10kR 1%
R15 100kR 1%
R16 22k1R 1%
C16 22pF 50V
C17 10uF 16V
ENABLE
Buttons (Reset & Boot)
SW1
SW_Push
R10 10kR 1%
SW2
C14 1nF 10V
Do not populate!
USB & Battery Switch
Q2 DMG3415U
D2 B5819W
R9 100kR 1%
Board Connectors/Pin layout
U4
Rust_Board
HX711 ADC
VAVDD = VBG*(R5+R6)/ R6
3.07V = 1.25*(12+8.2)/8.2
C9 10uF
Q1 S8550
R5 12kR 1%
R6 8k2R 1%
C10 10uF
R7 100R 1%
R8 100R 1%
C12 0.1uF
C11 0.1uF
U3 HX711
BASE
AVDD
VFB
VSUP
DVDD
DOUT
PD_SCK
INA+
INA-
INB+
INB-
XO
XI
RATE
VBG
AGND
Sergio Gasquez Arcos
Sheet: /
File: crimpdeq.kicad_sch
Title: Crimpdeq
Size: A4
Date:
Rev: 1.0
KiCad E.D.A. 9.0.1
Id: 1/1