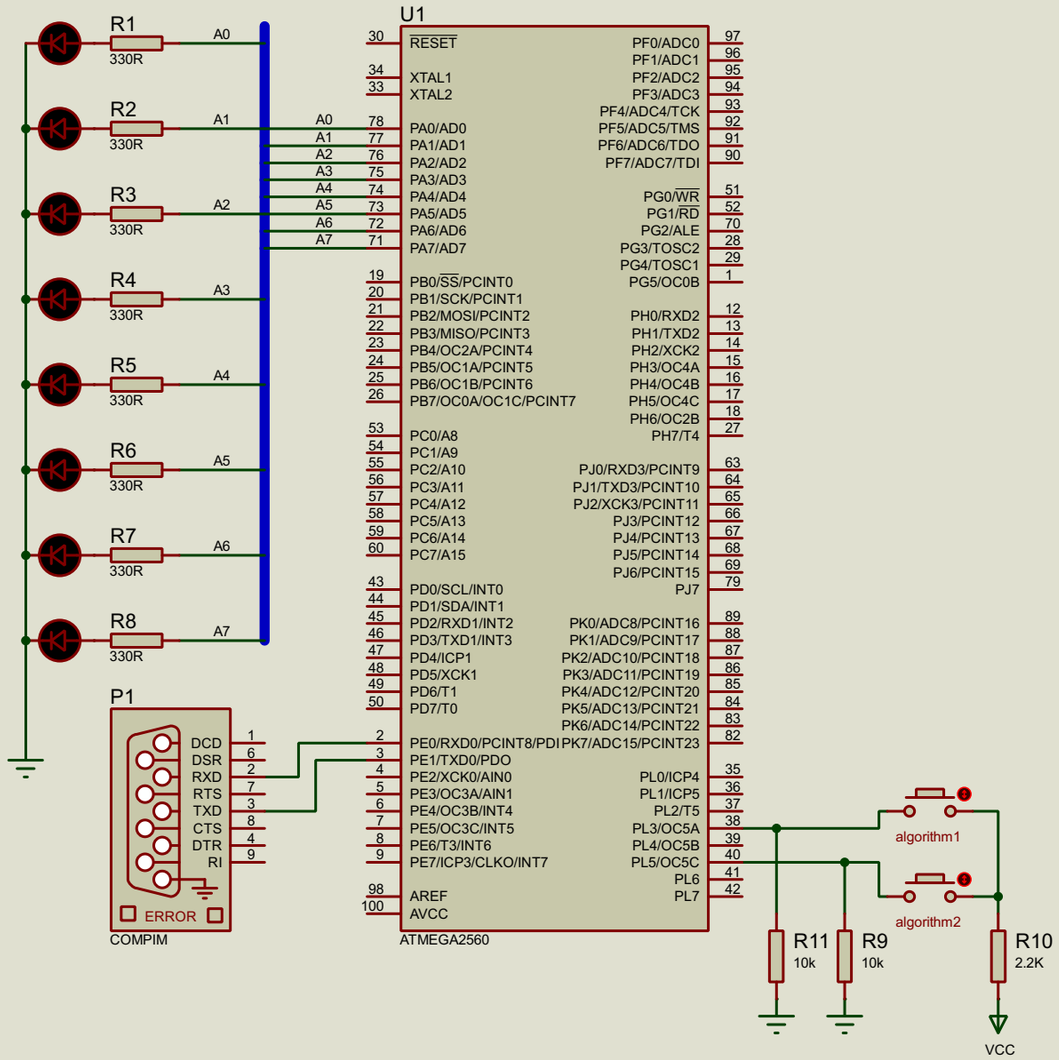

FILE NAME: Lab_2_Atmega2560.pdsprj	DATE: 24.02.2020
DESIGN TITLE: Lab_2_Atmega2560.pdsprj	PAGE: 1 OF 1
PATH: D:\Internet of Things\Semestr #4\Microcontrollers\Labs\Lab2\Lab_2	
BY: @AUTHOR REV:@REV	TIME: 0:33:43