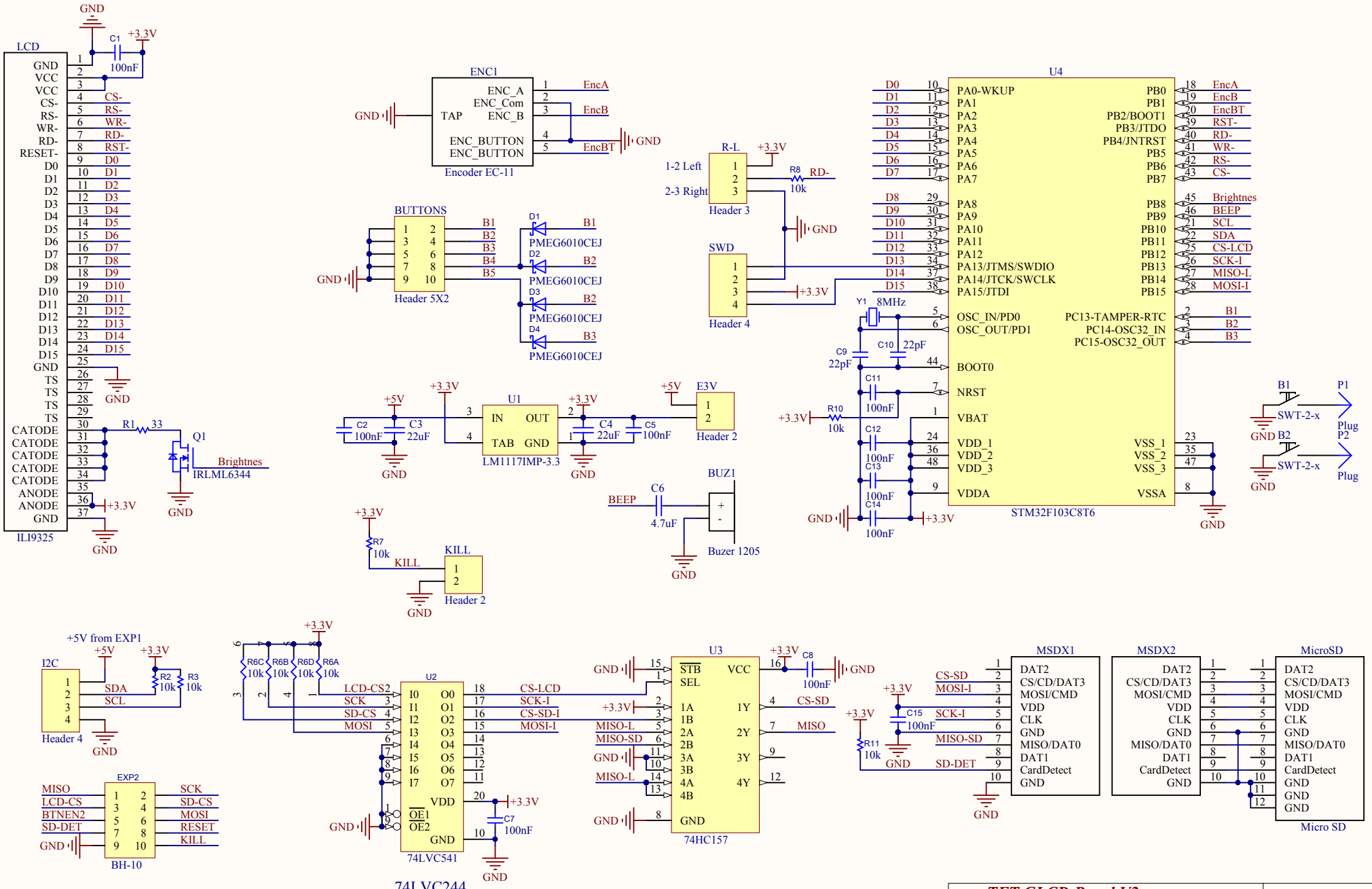
LCD
ILI9325
GND
VCC
CS-
RS-
WR-
RD-
RESET-
D0
D1
D2
D3
D4
D5
D6
D7
D8
D9
D10
D11
D12
D13
D14
D15
TS
CATODE
ANODE
C1
100nF
+3.3V
R1
33
Q1
IRLML6344
Brightnes
ENC1
Encoder EC-11
ENC_A
ENC_Com
ENC_B
TAP
ENC_BUTTON
EncA
EncB
EncBT
BUTTONS
Header 5X2
B1
B2
B3
B4
B5
PMEG6010CEJ
R-L
1-2 Left
2-3 Right
Header 3
R8
10k
RD-
SWD
Header 4
U4
STM32F103C8T6
PA0-WKUP
PA1
PA2
PA3
PA4
PA5
PA6
PA7
PA8
PA9
PA10
PA11
PA12
PA13/JTMS/SWDIO
PA14/JTCK/SWCLK
PA15/JTDI
PB0
PB1
PB2/BOOT1
PB3/JTDO
PB4/JNTRST
PB5
PB6
PB7
PB8
PB9
PB10
PB11
PB12
PB13
PB14
PB15
OSC_IN/PD0
OSC_OUT/PD1
PC13-TAMPER-RTC
PC14-OSC32_IN
PC15-OSC32_OUT
BOOT0
NRST
VBAT
VDD_1
VDD_2
VDD_3
VDDA
VSS_1
VSS_2
VSS_3
VSSA
Brightnes
BEEP
CS-LCD
CS-I
MISO-I
Y1
8MHz
C9
22pF
C10
22pF
C11
100nF
C12
100nF
C13
100nF
C14
100nF
R10
10k
U1
LM1117IMP-3.3
IN
OUT
TAB
C2
100nF
C3
22uF
C4
22uF
C5
100nF
E3V
Header 2
BUZ1
Buzer 1205
C6
4.7uF
R7
10k
KILL
Header 2
B1
B2
SWT-2-x
P1
P2
Plug
+5V from EXP1
I2C
Header 4
SDA
SCL
R2
10k
R3
10k
R6C
R6B
R6D
R6A
U2
74LVC541
LCD-CS2
SCK
SD-CS
MOSI
CS-LCD
SCK-I
CS-SD-I
MOSI-I
VDD
OE1
OE2
C7
100nF
EXP2
BH-10
MISO
LCD-CS
BTNEN2
SD-DET
SCK
SD-CS
MOSI
RESET
KILL
U3
74HC157
STB
SEL
VCC
1A
1B
2A
2B
3A
3B
4A
4B
1Y
2Y
3Y
4Y
MISO-L
MISO-SD
CS-SD
MISO
C8
100nF
C15
100nF
R11
10k
MSDX1
MSDX2
MicroSD
Micro SD
DAT2
CS/CD/DAT3
MOSI/CMD
VDD
CLK
GND
MISO/DAT0
DAT1
CardDetect
SD-DET
74LVC244
74LVC245
74LVC125
Title
TFT GLCD Panel V2
Size: A4
Number:
Revision: 2.0
Date: 03/09/2020
Time: 14:41:03
Sheet 1 of 1
File: TFT-GLCD.SchDoc
Engineer: Serj_K