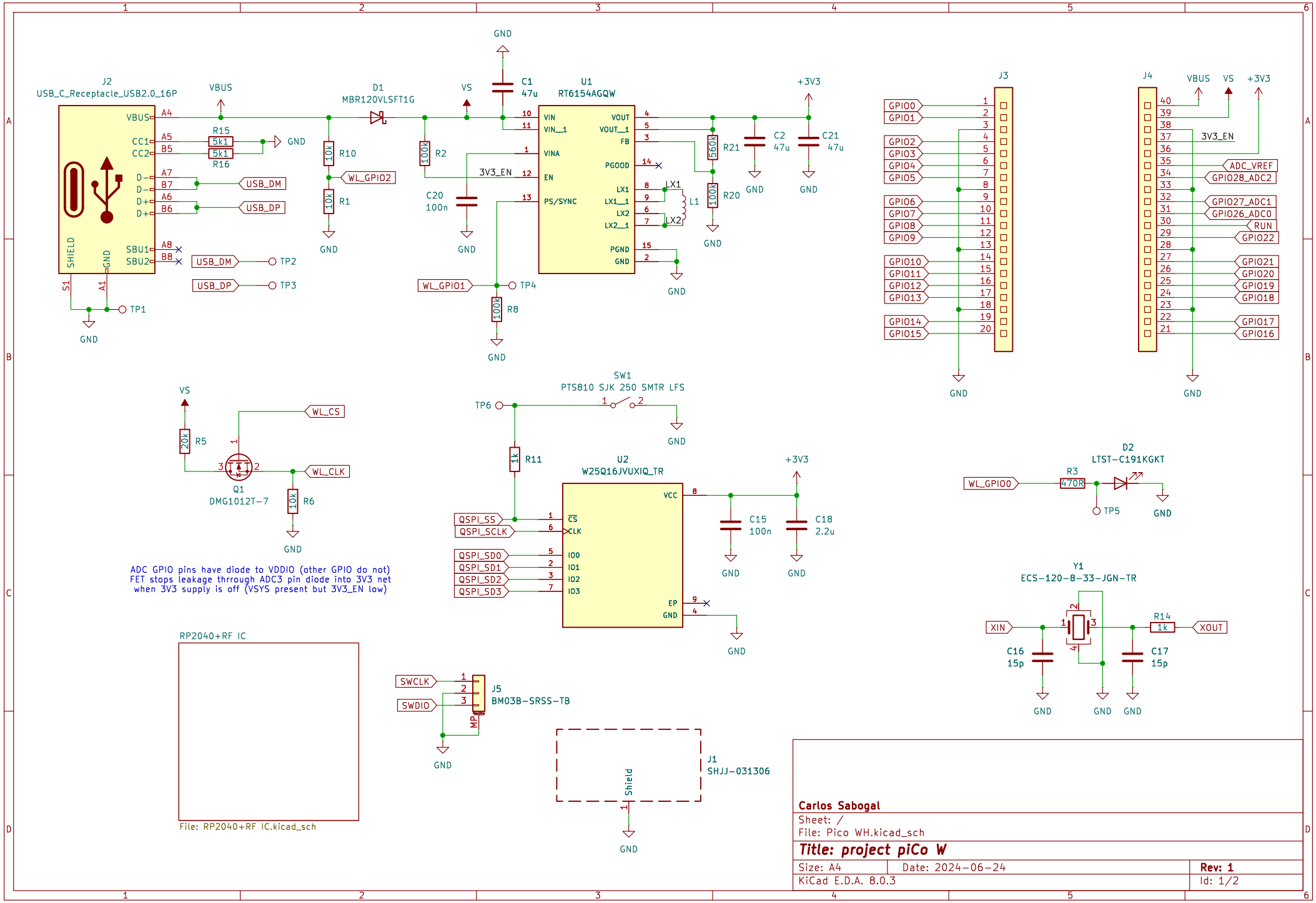

Carlos Sabogal

Sheet: /

File: Pico WH.kicad_sch

Title: project piCo W

Size: A4	Date: 2024−06−24	**Rev: 1**
KiCad E.D.A. 8.0.3		Id: 1/2

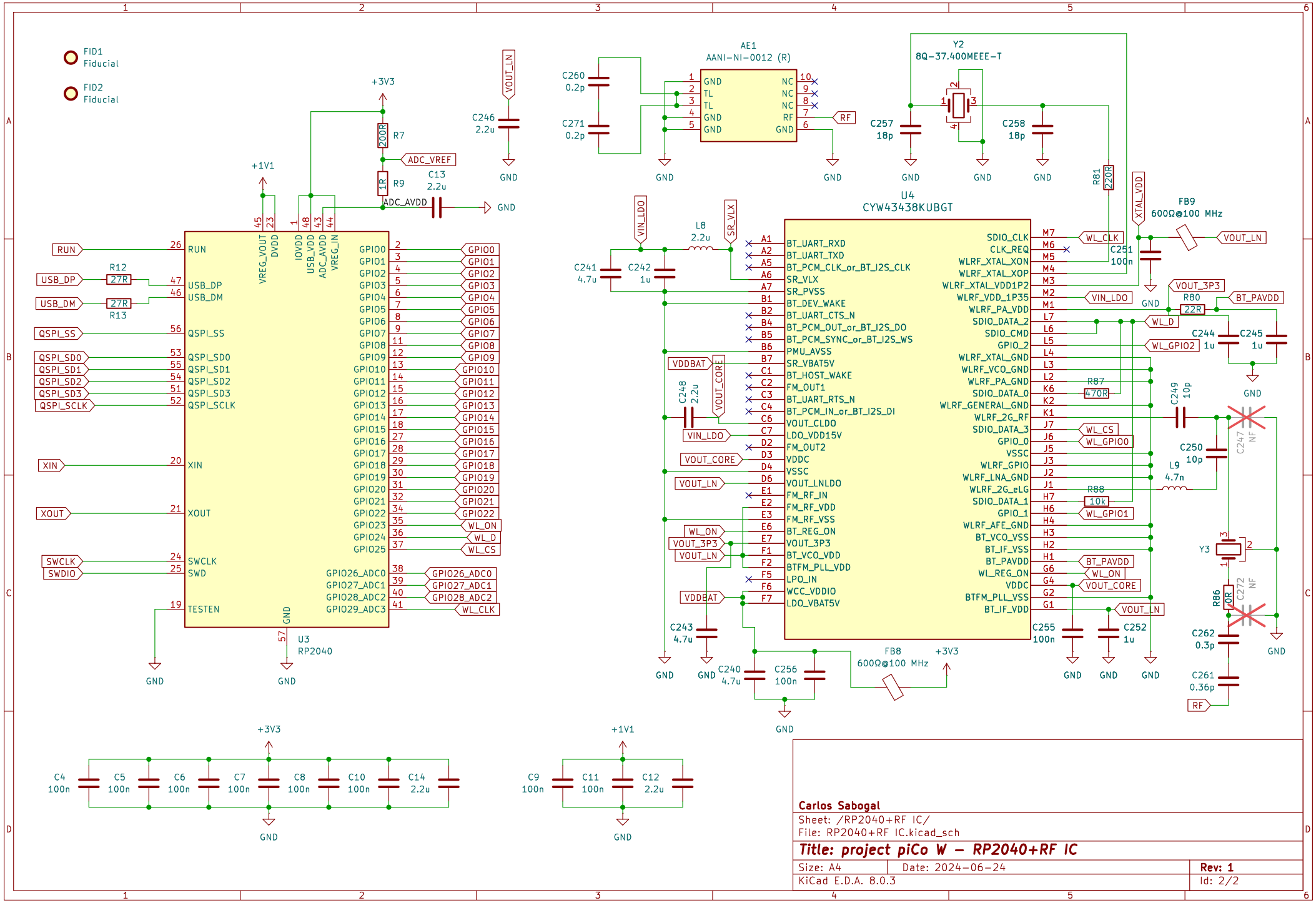

Carlos Sabogal

Sheet: /RP2040+RF IC/

File: RP2040+RF IC.kicad_sch

Title: project piCo W – RP2040+RF IC

Size: A4	Date: 2024-06-24	Rev: 1
KiCad E.D.A. 8.0.3		Id: 2/2