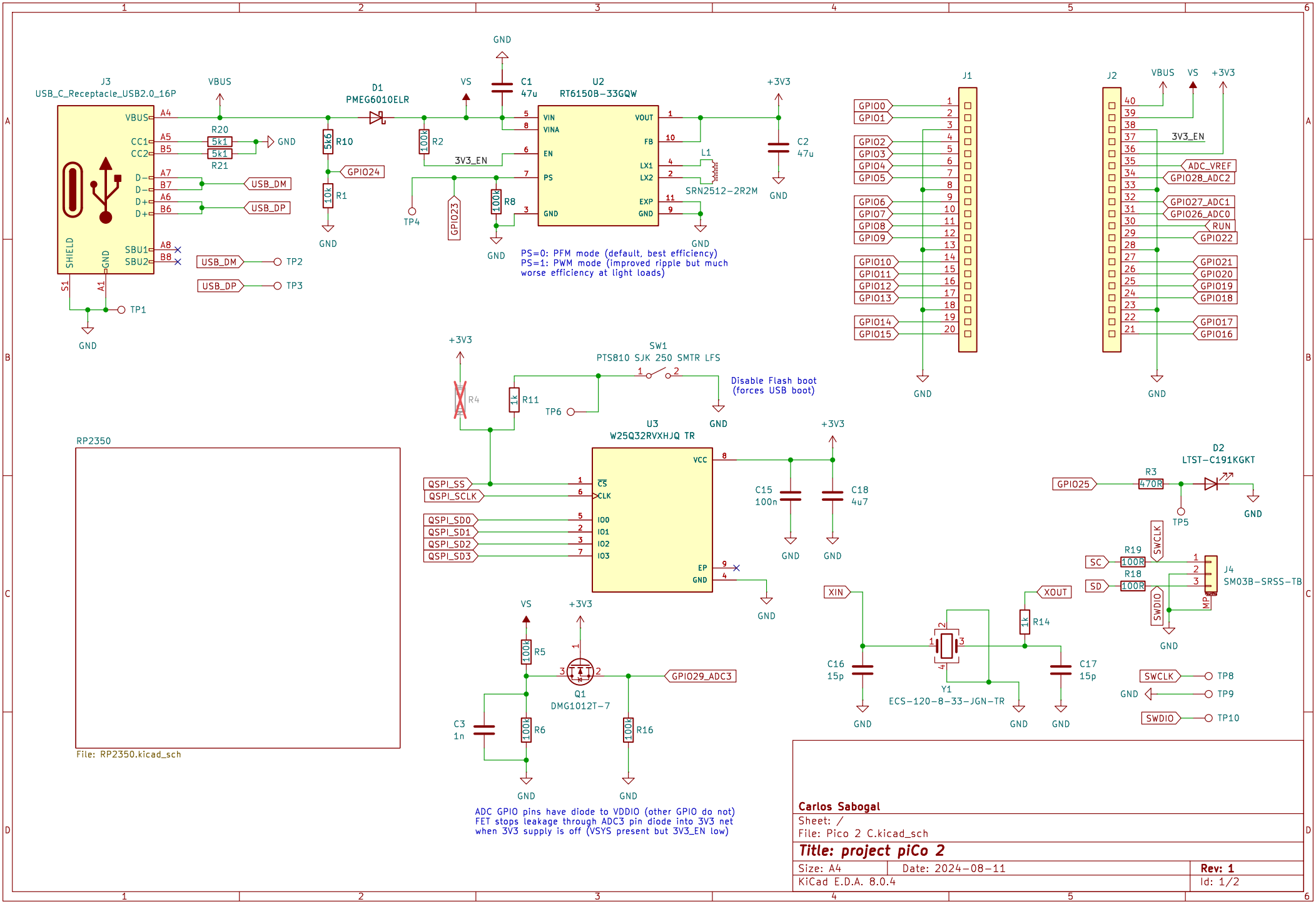

Carlos Sabogal

Sheet: /

File: Pico 2 C.kicad_sch

Title: project piCo 2

Size: A4	Date: 2024−08−11	**Rev: 1**
KiCad E.D.A. 8.0.4		Id: 1/2

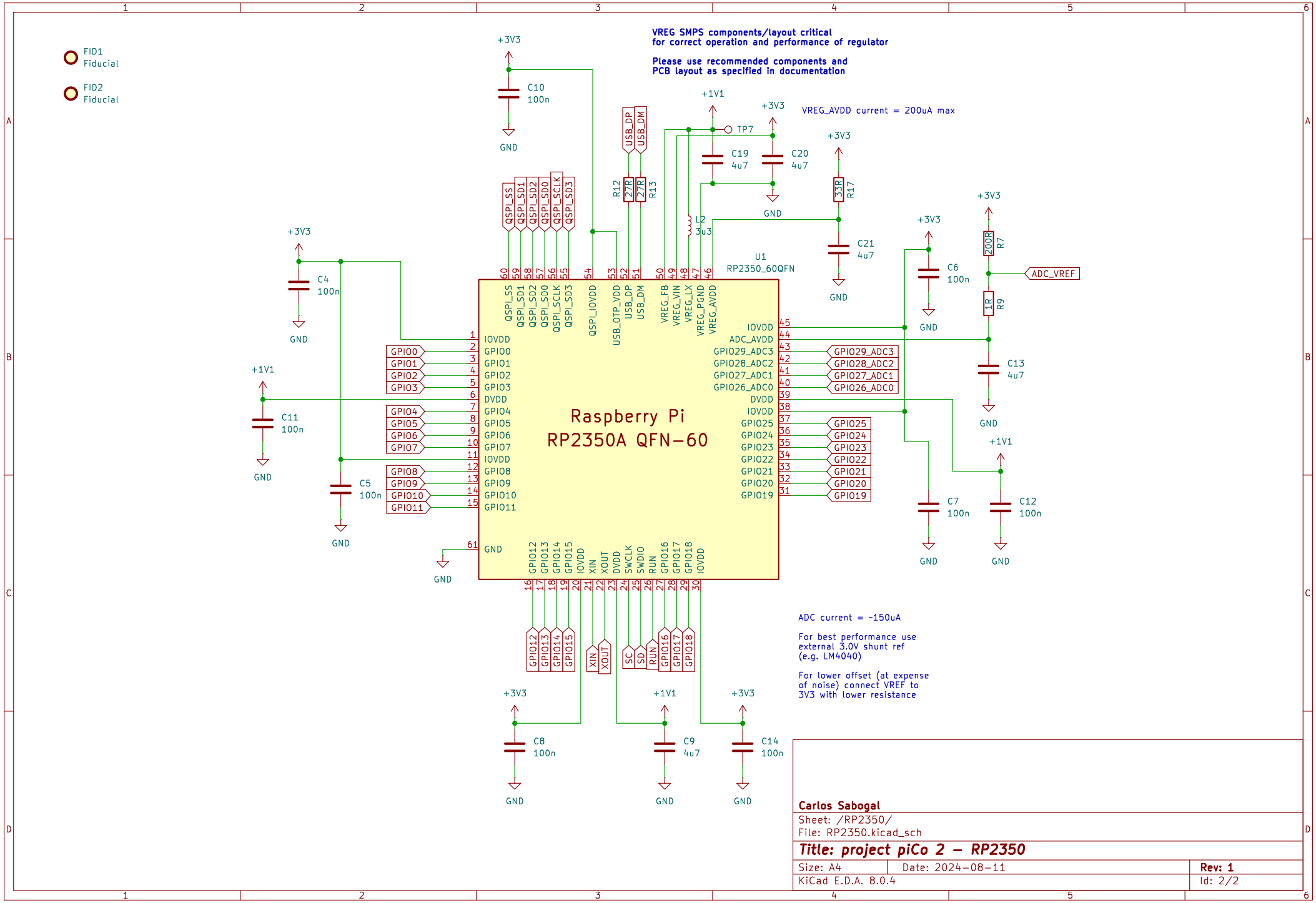

Carlos Sabogal

Sheet: /RP2350/

File: RP2350.kicad_sch

Title: project piCo 2 – RP2350

Size: A4	Date: 2024-08-11	Rev: 1
KiCad E.D.A. 8.0.4		Id: 2/2