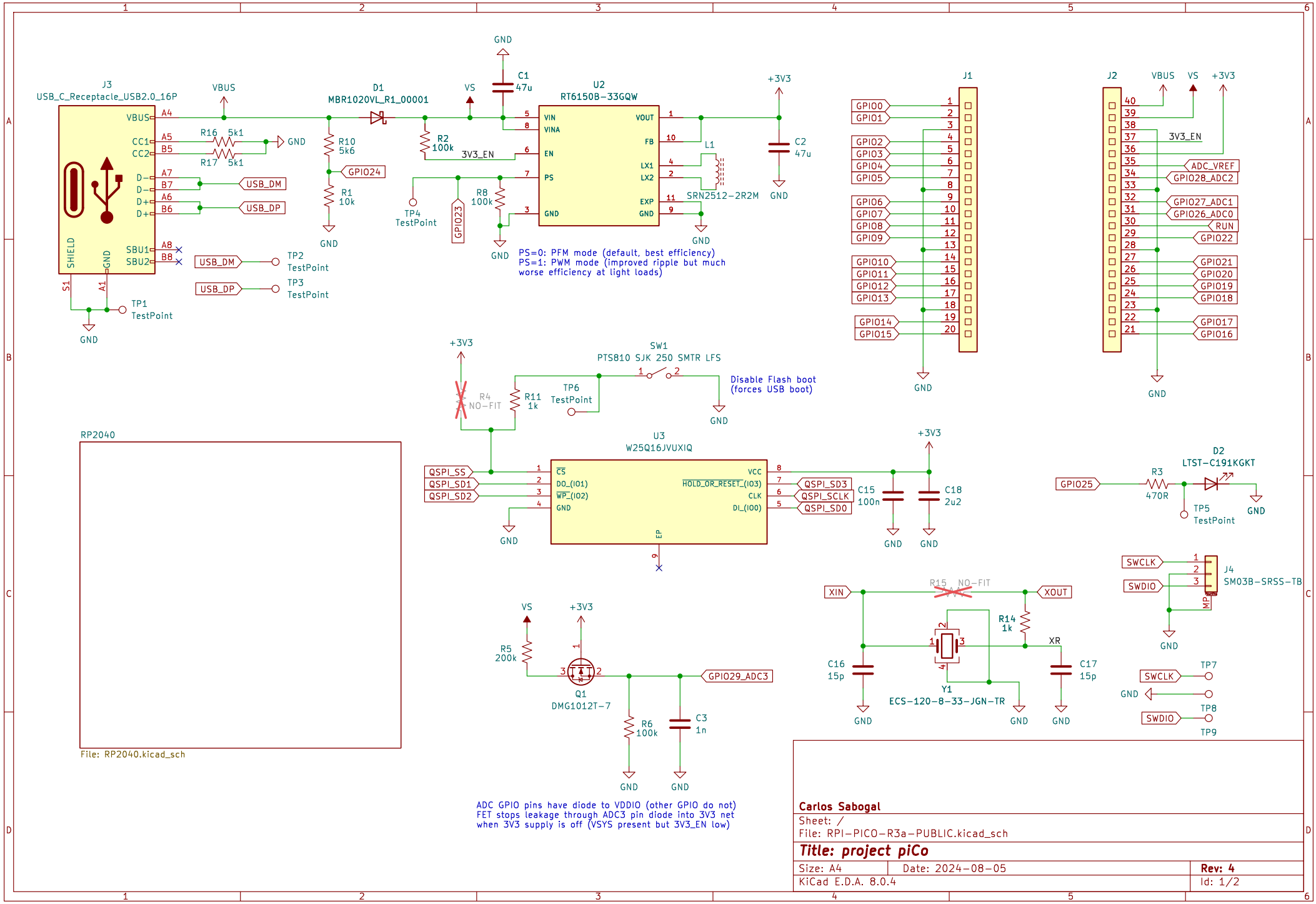
J3
USB_C_Receptacle_USB2.0_16P
VBUS
CC1
CC2
D−
D+
SHIELD
GND
SBU1
SBU2
R16 5k1
R17 5k1
USB_DM
USB_DP
TP1 TestPoint
TP2 TestPoint
TP3 TestPoint
D1
MBR1020VL_R1_00001
R10 5k6
R1 10k
GPIO24
R2 100k
3V3_EN
VS
C1 47u
U2
RT6150B−33GQW
VIN
VINA
EN
PS
GND
VOUT
FB
LX1
LX2
EXP
L1
SRN2512−2R2M
C2 47u
+3V3
R8 100k
TP4 TestPoint
GPIO23
PS=0: PFM mode (default, best efficiency)
PS=1: PWM mode (improved ripple but much worse efficiency at light loads)
J1
GPIO0
GPIO1
GPIO2
GPIO3
GPIO4
GPIO5
GPIO6
GPIO7
GPIO8
GPIO9
GPIO10
GPIO11
GPIO12
GPIO13
GPIO14
GPIO15
J2
VBUS
VS
+3V3
3V3_EN
ADC_VREF
GPIO28_ADC2
GPIO27_ADC1
GPIO26_ADC0
RUN
GPIO22
GPIO21
GPIO20
GPIO19
GPIO18
GPIO17
GPIO16
SW1
PTS810 SJK 250 SMTR LFS
Disable Flash boot (forces USB boot)
R4 NO−FIT
R11 1k
TP6 TestPoint
RP2040
File: RP2040.kicad_sch
U3
W25Q16JVUXIQ
QSPI_SS
QSPI_SD1
QSPI_SD2
CS
DO_(IO1)
WP_(IO2)
VCC
HOLD_OR_RESET_(IO3)
CLK
DI_(IO0)
QSPI_SD3
QSPI_SCLK
QSPI_SD0
C15 100n
C18 2u2
D2
LTST−C191KGKT
GPIO25
R3 470R
TP5 TestPoint
SWCLK
SWDIO
J4
SM03B−SRSS−TB
MP
TP7
TP8
TP9
XIN
XOUT
R15 NO−FIT
R14 1k
XR
C16 15p
C17 15p
Y1
ECS−120−8−33−JGN−TR
R5 200k
Q1
DMG1012T−7
GPIO29_ADC3
R6 100k
C3 1n
ADC GPIO pins have diode to VDDIO (other GPIO do not)
FET stops leakage through ADC3 pin diode into 3V3 net when 3V3 supply is off (VSYS present but 3V3_EN low)
Carlos Sabogal
Sheet: /
File: RPI−PICO−R3a−PUBLIC.kicad_sch
Title: project piCo
Size: A4
Date: 2024−08−05
Rev: 4
KiCad E.D.A. 8.0.4
Id: 1/2

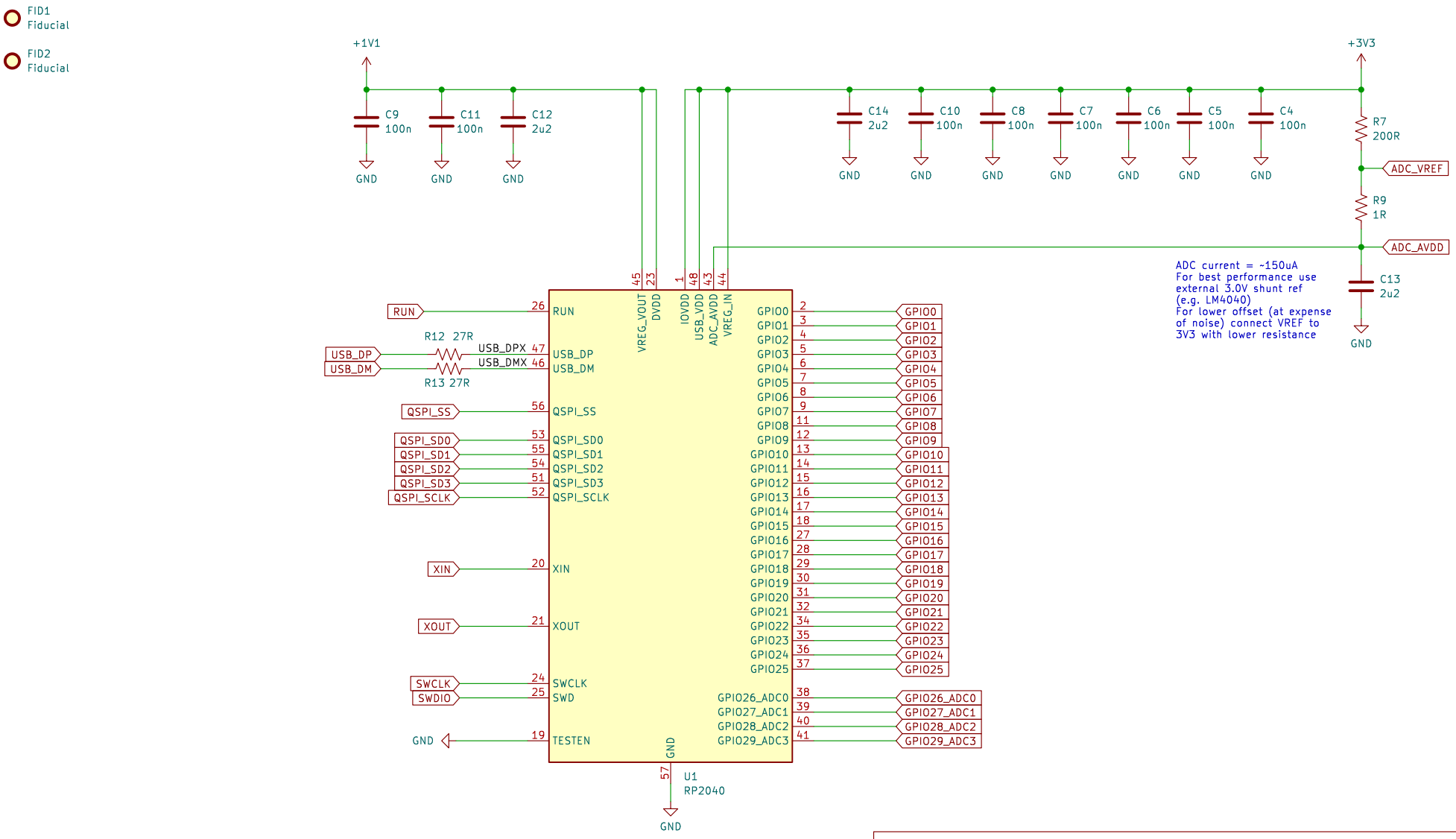

Carlos Sabogal

Sheet: /RP2040/
File: RP2040.kicad_sch

Title: project piCo – RP2040

Size: A4	Date: 2024-08-05	**Rev: 4**
KiCad E.D.A. 8.0.4		Id: 2/2