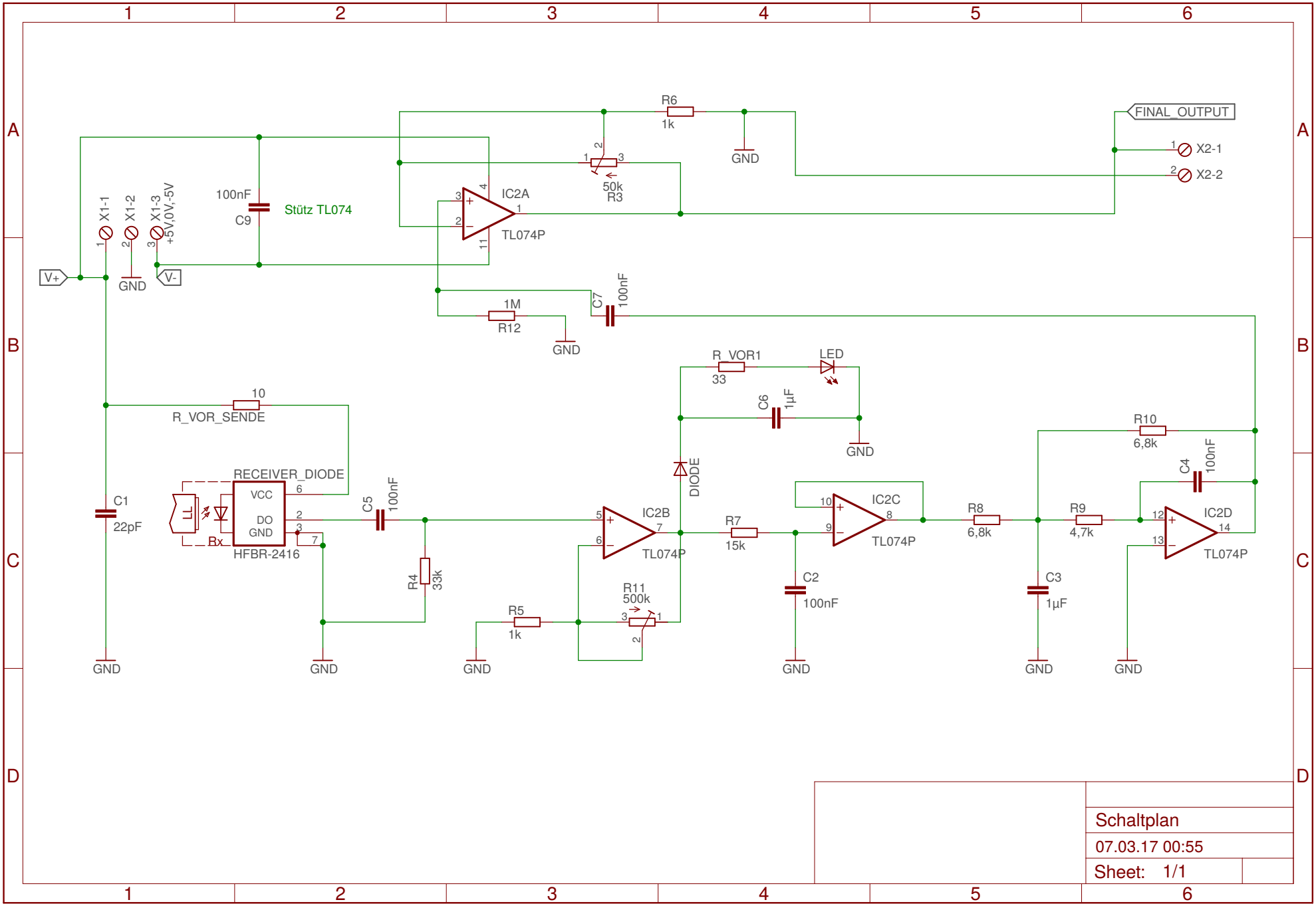
R6
1k
GND
FINAL_OUTPUT
X2-1
X2-2
50k
R3
IC2A
TL074P
100nF
C9
Stütz TL074
X1-1
X1-2
X1-3
+5V,0V,-5V
V+
V-
GND
C7
100nF
1M
R12
GND
R_VOR1
33
LED
C6
1µF
GND
10
R_VOR_SENDE
R10
6,8k
C4
100nF
RECEIVER_DIODE
VCC
DO
GND
Rx
HFBR-2416
C1
22pF
C5
100nF
DIODE
IC2B
TL074P
IC2C
TL074P
R7
15k
R8
6,8k
R9
4,7k
IC2D
TL074P
R4
33k
R11
500k
R5
1k
C2
100nF
C3
1µF
GND
GND
GND
GND
GND
GND
GND
Schaltplan
07.03.17 00:55
Sheet: 1/1