SNx4AHCT125 Quadruple Bus Buffer Gates With 3-State Outputs

1 Features

- Inputs are TTL-voltage compatible
- Latch-up performance exceeds 250mA per JESD 17

2 Applications

- Enable or disable a digital signal
- Controlling an indicator LED
- Debounce a switch
- Eliminate slow or noisy input signals

3 Description

The ’AHCT125 devices are quadruple bus buffer gates featuring independent line drivers with 3-state outputs. Each output is disabled when the associated output-enable ($\overline{OE}$) input is high. When $\overline{OE}$ is low, the respective gate passes the data from the A input to its Y output.

For the high-impedance state during power up or power down, $\overline{OE}$ should be tied to V_{CC} through a pullup resistor; the minimum value of the resistor is determined by the current-sinking capability of the driver.

Device Information

PART NUMBER	RATING	PACKAGE(1)
SN54AHCT125	Military	J (CDIP, 14)
		W (CFP, 14)
		FK (LCCC, 20)
SN74AHCT125	Commercial	D (SOIC, 14)
		DB (SSOP, 14)
		DGV (TVSOP, 14)
		N (PDIP, 14)
		NS (SOP, 14)
		PW (SOP, 14)
		RGY (VQFN, 14)
		BQA (WQFN, 14)

(1) For more information, see Section 11.

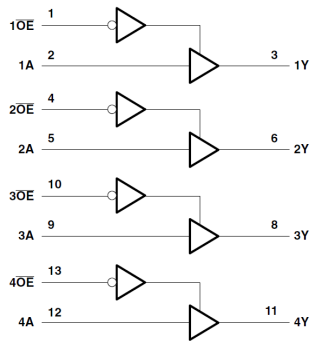

Pin numbers are for D, DB, DGV, J, N, NS, PW, RGY, and W packages.

Logic Diagram (Positive Logic)

An IMPORTANT NOTICE at the end of this data sheet addresses availability, warranty, changes, use in safety-critical applications, intellectual property matters and other important disclaimers. PRODUCTION DATA.

Table of Contents

1 Features....1
2 Applications....1
3 Description....1
4 Pin Configuration and Functions....3
5 Specifications....5
5.1 Absolute Maximum Ratings....5
5.2 Recommended Operating Conditions[1]....5
5.3 Thermal Information....5
5.4 Electrical Characteristics....6
5.5 Switching Characteristics....6
5.6 Noise Characteristics....7
5.7 Operating Characteristics....7
6 Parameter Measurement Information....8
7 Detailed Description....9
7.1 Overview....9
7.2 Functional Block Diagram....9
7.3 Feature Description....9
7.4 Device Functional Modes....9
8 Application and Implementation....10
8.1 Application Information....10
8.2 Typical Application....10
8.3 Power Supply Recommendations....11
8.4 Layout....12
9 Device and Documentation Support....13
9.1 Receiving Notification of Documentation Updates....13
9.2 Support Resources....13
9.3 Trademarks....13
9.4 Electrostatic Discharge Caution....13
9.5 Glossary....13
10 Revision History....13
11 Mechanical, Packaging, and Orderable Information....13

Copyright © 2024 Texas Instruments Incorporated

4 Pin Configuration and Functions

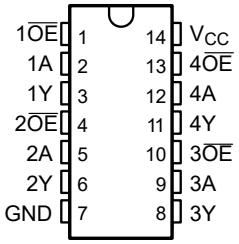

Figure 4-1. SN54AHCT125 J or W Package, SN74AHCT125 D, DB, DGV, N, NS, or PW Package (Top View)

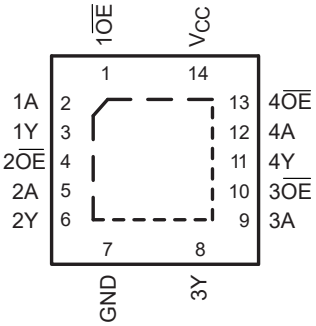

Figure 4-2. SN74AHCT125 RGY or BQA Package (Top View)

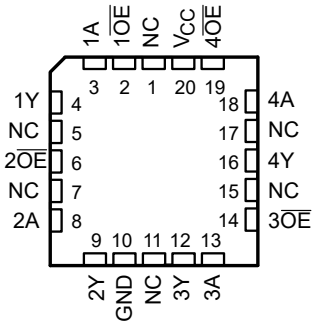

NC − No internal connection

Figure 4-3. SN54AHCT125 FK Package, (Top View)

Table 4-1. Pin Functions

PIN			I/O	DESCRIPTION
NAME	D, DB, DGV, N, NS, J, W, PW, RGY or BQA	FK		
1 $\overline{OE}$	1	2	I	Output enable for gate 1
1A	2	3	I	Gate 1 input
1Y	3	4	O	Gate 1 output
2 $\overline{OE}$	4	6	I	Output enable for gate 2
2A	5	8	I	Gate 2 input
2Y	6	9	O	Gate 2 output
3 $\overline{OE}$	10	14	I	Output enable for gate 3
3A	9	13	I	Gate 3 input
3Y	8	12	O	Gate 3 output
4 $\overline{OE}$	13	19	I	Output enable for gate 4
4A	12	18	I	Gate 4 input
4Y	11	16	O	Gate 4 output
GND	7	10	—	Ground pin
NC	—	1, 5, 7, 11, 15, 17	—	No internal connection
V_{CC}	14	20	—	Power pin

Copyright © 2024 Texas Instruments Incorporated

5 Specifications

5.1 Absolute Maximum Ratings

over operating free-air temperature range (unless otherwise noted) [1]

			MIN	MAX	UNIT
V_{CC}	Supply voltage range		–0.5	7	V
V_I	Input voltage range[2]		–0.5	7	V
V_O	Output voltage range[2]		–0.5	V_{CC} + 0.5	V
I_{IK}	Input clamp current	$V_I < 0$		–20	mA
I_{OK}	Output clamp current	$V_O < 0$ or $V_O > V_{CC}$		±20	mA
I_O	Continuous output current	$V_O = 0$ to V_{CC}		±25	mA
	Continuous current through V_{CC} or GND			±50	mA
T_{stg}	Storage temperature range		–65	150	°C

(1) Stresses beyond those listed under *Absolute Maximum Ratings* may cause permanent damage to the device. These are stress ratings only, and functional operation of the device at these or any other conditions beyond those indicated under *Recommended Operating Conditions* is not implied. Exposure to absolute-maximum-rated conditions for extended periods may affect device reliability.
(2) The input and output voltage ratings may be exceeded if the input and output current ratings are observed.

5.2 Recommended Operating Conditions[1]

		SN54AHCT125		SN74AHCT125		UNIT
		MIN	MAX	MIN	MAX	
V_{CC}	Supply voltage	4.5	5.5	4.5	5.5	V
V_{IH}	High-level input voltage	2		2		V
V_{IL}	Low-level input voltage		0.8		0.8	V
V_I	Input voltage	0	5.5	0	5.5	V
V_O	Output voltage	0	V_{CC}	0	V_{CC}	V
I_{OH}	High-level output current		–8		–8	mA
I_{OL}	Low-level output current		8		8	mA
Δt/Δv	Input transition rise or fall rate		20		20	ns/V
T_A	Operating free-air temperature	–55	125	–40	85	°C

(1) All unused inputs of the device must be held at V_{CC} or GND to ensure proper device operation. Refer to the TI application report, *Implications of Slow or Floating CMOS Inputs*, literature number SCBA004.

5.3 Thermal Information

THERMAL METRIC[1]		SNx4AHCT125								UNIT
		D (SOIC)	DB (SSOP)	DGV (TVSOP)	N (PDIP)	NS (SO)	PW (TSSOP)	RGY (VQFN)	BQA (WQFN)	
		14	14	14	14	14	14	14	14	
θ_{JA}	Package thermal impedance	124.5	96	127	80	76	147.7	87.1	88.3	°C/W

(1) For more information about traditional and new thermal metrics, see the *Semiconductor and IC package thermal metrics* application report.

Copyright © 2024 Texas Instruments Incorporated

5.4 Electrical Characteristics

over operating free-air temperature range (unless otherwise noted)

PARAMETER	TEST CONDITIONS	V_{CC}	T_A = 25°C			SN54AHCT125		SN74AHCT125		UNIT
			MIN	TYP	MAX	MIN	MAX	MIN	MAX	
V_{OH}	I_{OH} = –50 µA	4.5 V	4.4	4.5		4.4		4.4		V
	I_{OH} = –8 mA		3.94			3.8		3.8		
V_{OL}	I_{OL} = 50 µA	4.5 V			0.1		0.1		0.1	V
	I_{OL} = 8 mA				0.36		0.44		0.44	
I_I	V_I = 5.5 V or GND	0 V to 5.5 V			±0.1		±1[(1)]		±1	µA
I_{OZ}	V_O = V_{CC} or GND	5.5 V			±0.25		±2.5		±2.5	µA
I_{CC}	V_I = V_{CC} or GND, I_O = 0	5.5 V			2		20		20	µA
ΔI_{CC} [(2)]	One input at 3.4 V, Other inputs at V_{CC} or GND	5.5 V			1.35		1.5		1.5	mA
C_i	V_I = V_{CC} or GND	5 V		4	10				10	pF
C_o	V_O = V_{CC} or GND	5 V		15						pF

(1) On products compliant to MIL-PRF-38535, this parameter is not production tested at V_{CC} = 0 V.
(2) This is the increase in supply current for each input at one of the specified TTL voltage levels, rather than 0 V or V_{CC}.

5.5 Switching Characteristics

over recommended operating free-air temperature range, V_{CC} = 5 V ± 0.5 V (unless otherwise noted) (see Figure 6-1)

PARAMETER	FROM (INPUT)	TO (OUTPUT)	LOAD CAPACITANCE	T_A = 25°C			SN54AHCT125		SN74AHCT125		UNIT
				MIN	TYP	MAX	MIN	MAX	MIN	MAX	
t_{PLH}	A	Y	C_L = 15 pF		3.8[(1)]	5.5[(1)]	1[(1)]	6.5[(1)]	1	6.5	ns
t_{PHL}					3.8[(1)]	5.5[(1)]	1[(1)]	6.5[(1)]	1	6.5	
t_{PZH}	$\overline{OE}$	Y	C_L = 15 pF		3.6[(1)]	5.1[(1)]	1[(1)]	6[(1)]	1	6	ns
t_{PZL}					3.6[(1)]	5.1[(1)]	1[(1)]	6[(1)]	1	6	
t_{PHZ}	$\overline{OE}$	Y	C_L = 15 pF		4.6[(1)]	6.8[(1)]	1[(1)]	8[(1)]	1	8	ns
t_{PLZ}					4.6[(1)]	6.8[(1)]	1[(1)]	8[(1)]	1	8	
t_{PLH}	A	Y	C_L = 50 pF		5.3	7.5	1	8.5	1	8.5	ns
t_{PHL}					5.3	7.5	1	8.5	1	8.5	
t_{PZH}	$\overline{OE}$	Y	C_L = 50 pF		5.1	7.1	1	8	1	8	ns
t_{PZL}					5.1	7.1	1	8	1	8	
t_{PHZ}	$\overline{OE}$	Y	C_L = 50 pF		6.1	8.8	1	10	1	10	ns
t_{PLZ}					6.1	8.8	1	10	1	10	
$t_{sk(o)}$			C_L = 50 pF			1[(2)]				1	ns

(1) On products compliant to MIL-PRF-38535, this parameter is not production tested.
(2) On products compliant to MIL-PRF-38535, this parameter does not apply.

Copyright © 2024 Texas Instruments Incorporated

5.6 Noise Characteristics

V_{CC} = 5 V, C_L = 50 pF, T_A = 25°C[1]

PARAMETER		SN74AHCT125		UNIT
		MIN	MAX	
$V_{OL(P)}$	Quiet output, maximum dynamic V_{OL}		0.8	V
$V_{OL(V)}$	Quiet output, minimum dynamic V_{OL}		–0.8	V
$V_{OH(V)}$	Quiet output, minimum dynamic V_{OH}	4.4		V
$V_{IH(D)}$	High-level dynamic input voltage	2		V
$V_{IL(D)}$	Low-level dynamic input voltage		0.8	V

(1) Characteristics are for surface-mount packages only.

5.7 Operating Characteristics

V_{CC} = 5 V, T_A = 25°C

PARAMETER		TEST CONDITIONS		TYP	UNIT
C_{pd}	Power dissipation capacitance	No load,	f = 1 MHz	14	pF