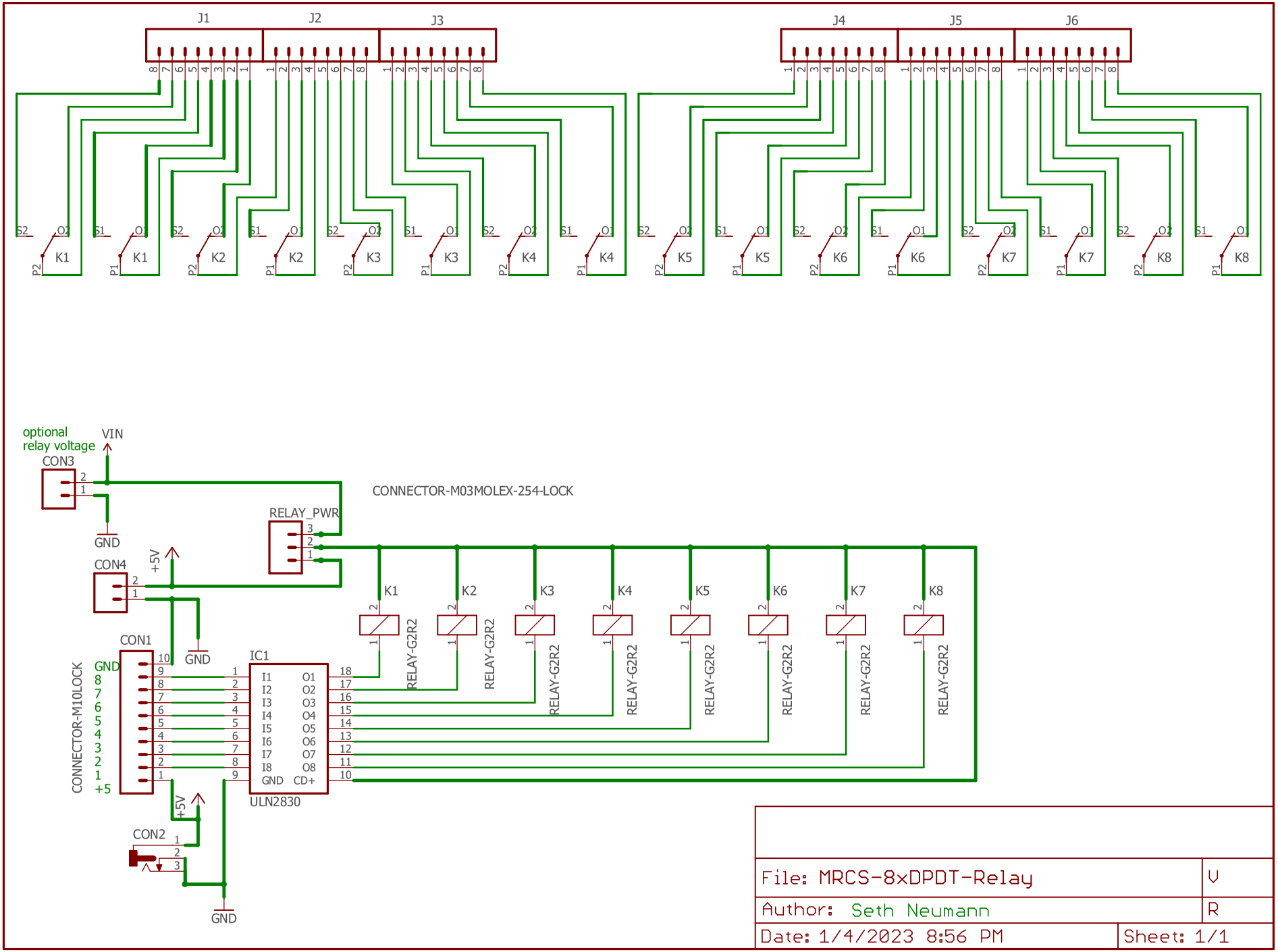
J1
J2
J3
J4
J5
J6
K1
K2
K3
K4
K5
K6
K7
K8
S2
O2
S1
O1
P2
P1
optional
relay voltage
VIN
CON3
GND
CONNECTOR-M03MOLEX-254-LOCK
RELAY_PWR
+5V
CON4
CON1
CONNECTOR-M10LOCK
GND
8
7
6
5
4
3
2
1
+5
IC1
I1
I2
I3
I4
I5
I6
I7
I8
GND
O1
O2
O3
O4
O5
O6
O7
O8
CD+
ULN2830
RELAY-G2R2
CON2
File: MRCS-8xDPDT-Relay
V
Author: Seth Neumann
R
Date: 1/4/2023 8:56 PM
Sheet: 1/1