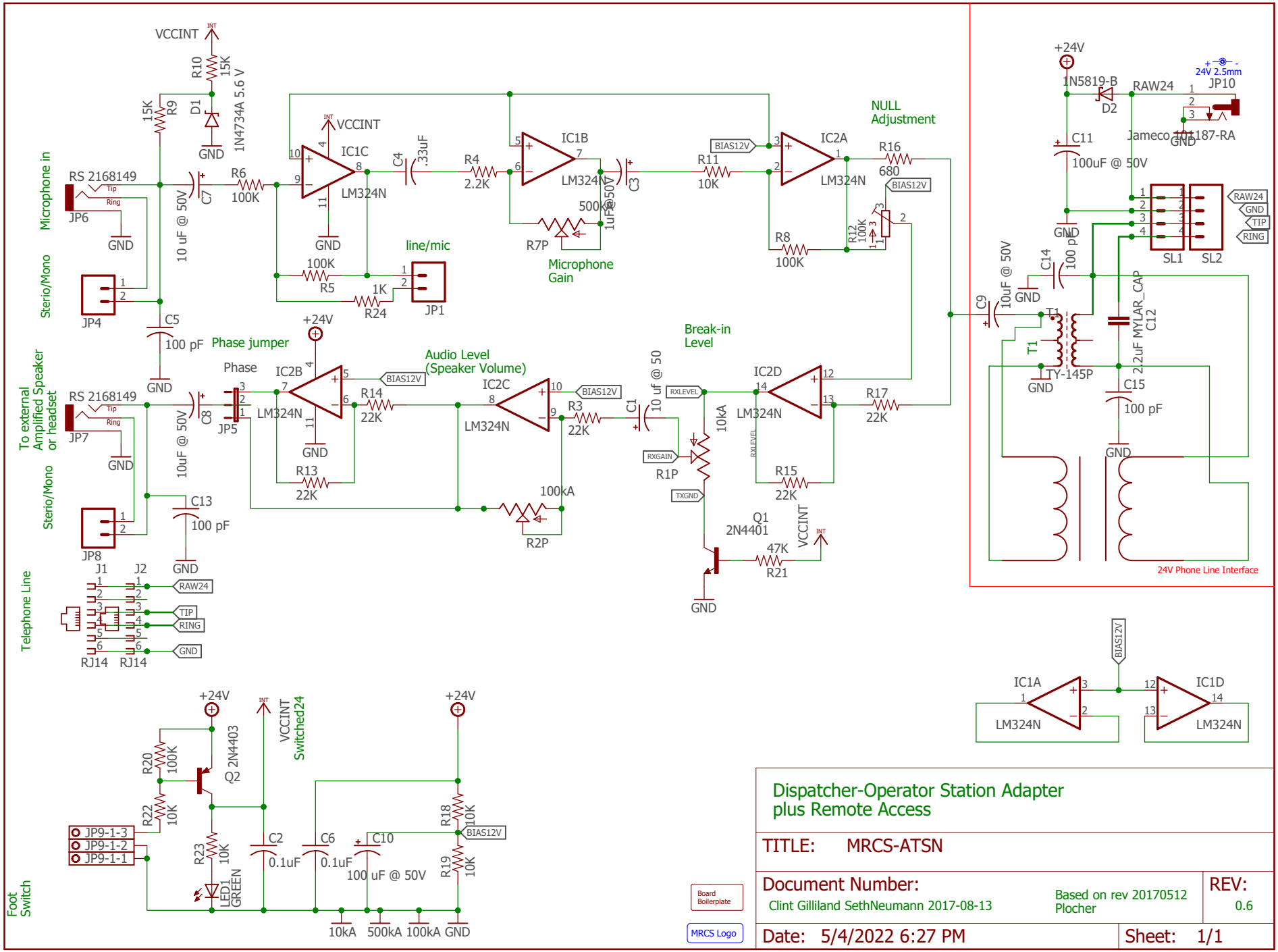

Dispatcher-Operator Station Adapter plus Remote Access

TITLE: MRCS-ATSN

Document Number:

Clint Gilliland SethNeumann 2017-08-13

Based on rev 20170512 Plocher

REV: 0.6

Date: 5/4/2022 6:27 PM

Sheet: 1/1