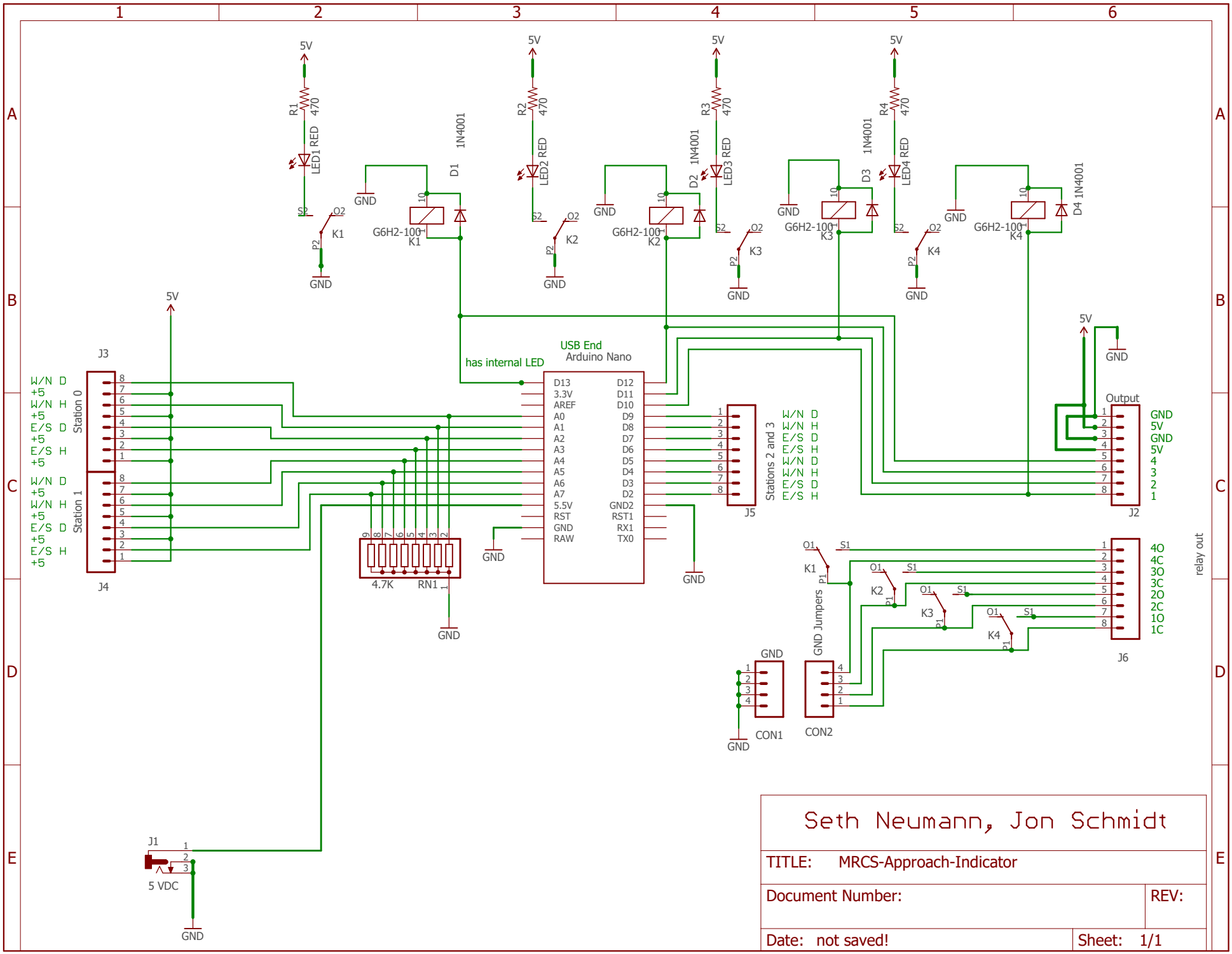

Seth Neumann, Jon Schmidt

TITLE: MRCS-Approach-Indicator

Document Number:

REV:

Date: not saved!

Sheet: 1/1