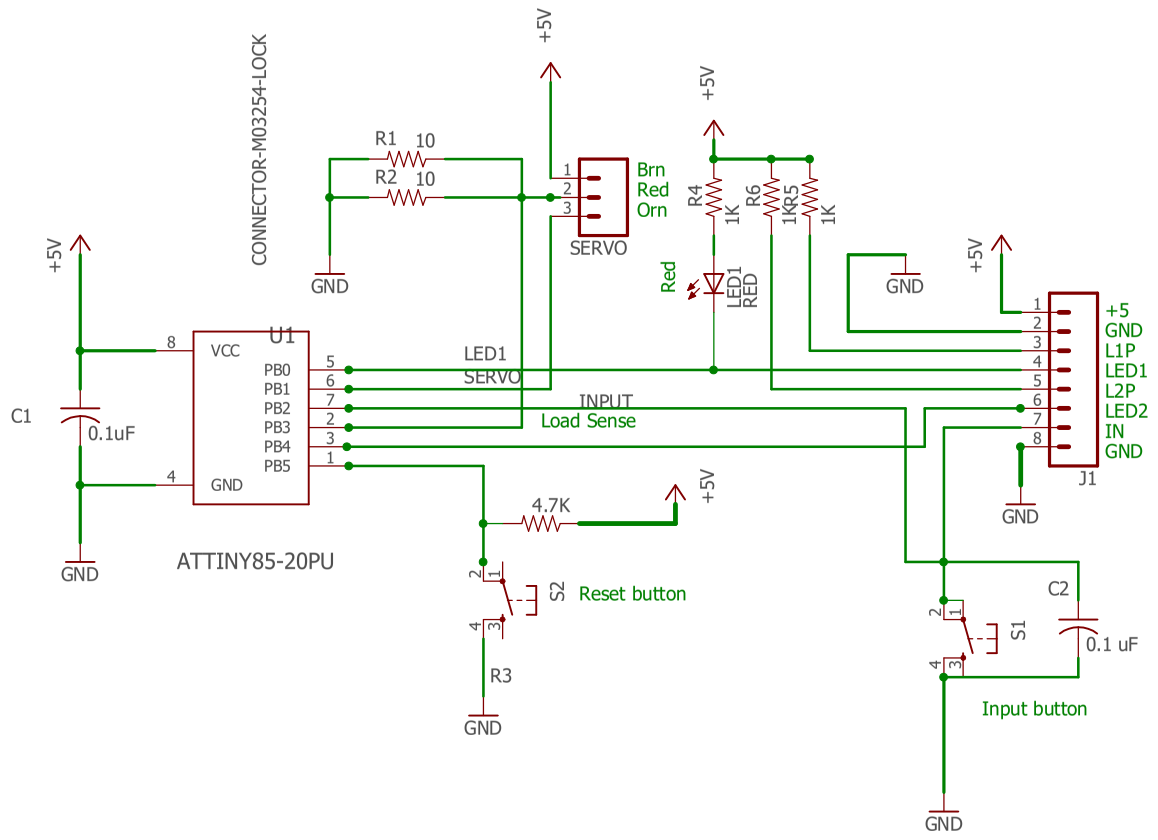

File: MRCS-Tiny85-Servo-Auto	V
Author: Seth Neumann	R
Date: 5/6/2022 4:18 PM	Sheet: 1/1