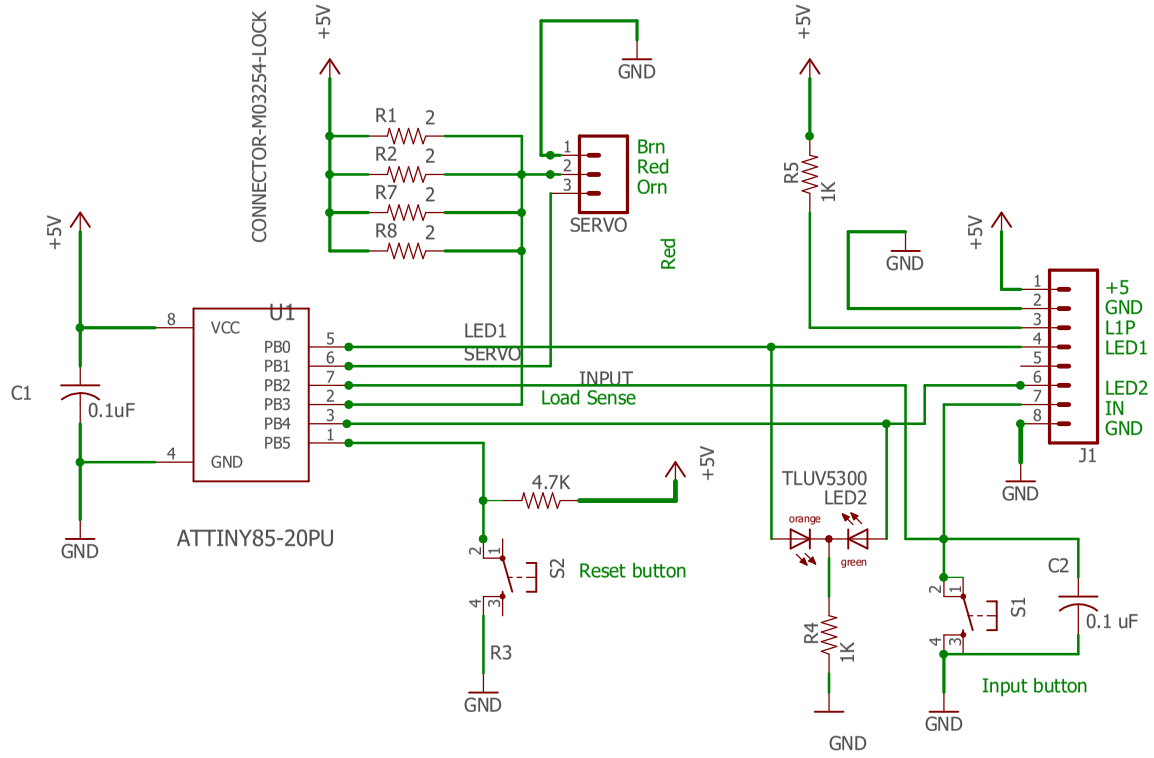

File: MRCS-Tiny85-Servo-Auto	V 1.1
Author: Seth Neumann	R
Date: not saved!	Sheet: 1/1