ECEN 324
Computer Architecture

Storage Technologies and Trends

Today

- **Storage technologies and trends**

Random-Access Memory (RAM)

- **Key features**
  - RAM is traditionally packaged as a chip.
  - Basic storage unit is normally a cell (one bit per cell).
  - Multiple RAM chips form a memory.

- **RAM comes in two varieties:**
  - SRAM (Static RAM)
  - DRAM (Dynamic RAM)

SRAM vs DRAM Summary

	Trans. per bit	Access time	Needs refresh?	Needs EDC?	Cost	Applications
SRAM	4 or 6	1X	No	Maybe	100x	Cache memories
DRAM	1	10X	Yes	Yes	1X	Main memories, frame buffers

Nonvolatile Memories

- **DRAM and SRAM are volatile memories**
  - Lose information if powered off.
- **Nonvolatile memories retain value even if powered off**
  - Read-only memory (ROM): programmed during production
  - Programmable ROM (PROM): can be programmed once
  - Eraseable PROM (EPROM): can be bulk erased (UV, X-Ray)
  - Electrically eraseable PROM (EEPROM): electronic erase capability
  - Flash memory: EEPROMs. with partial (block-level) erase capability
    - Wears out after about 100,000 erasings
- **Uses for Nonvolatile Memories**
  - Firmware programs stored in a ROM (BIOS, controllers for disks, network cards, graphics accelerators, security subsystems,…)
  - Solid state disks (replace rotating disks in thumb drives, smart phones, mp3 players, tablets, laptops,…)
  - Disk caches

Traditional Bus Structure Connecting CPU and Memory

- A bus is a collection of parallel wires that carry address, data, and control signals.
- Buses are typically shared by multiple devices.

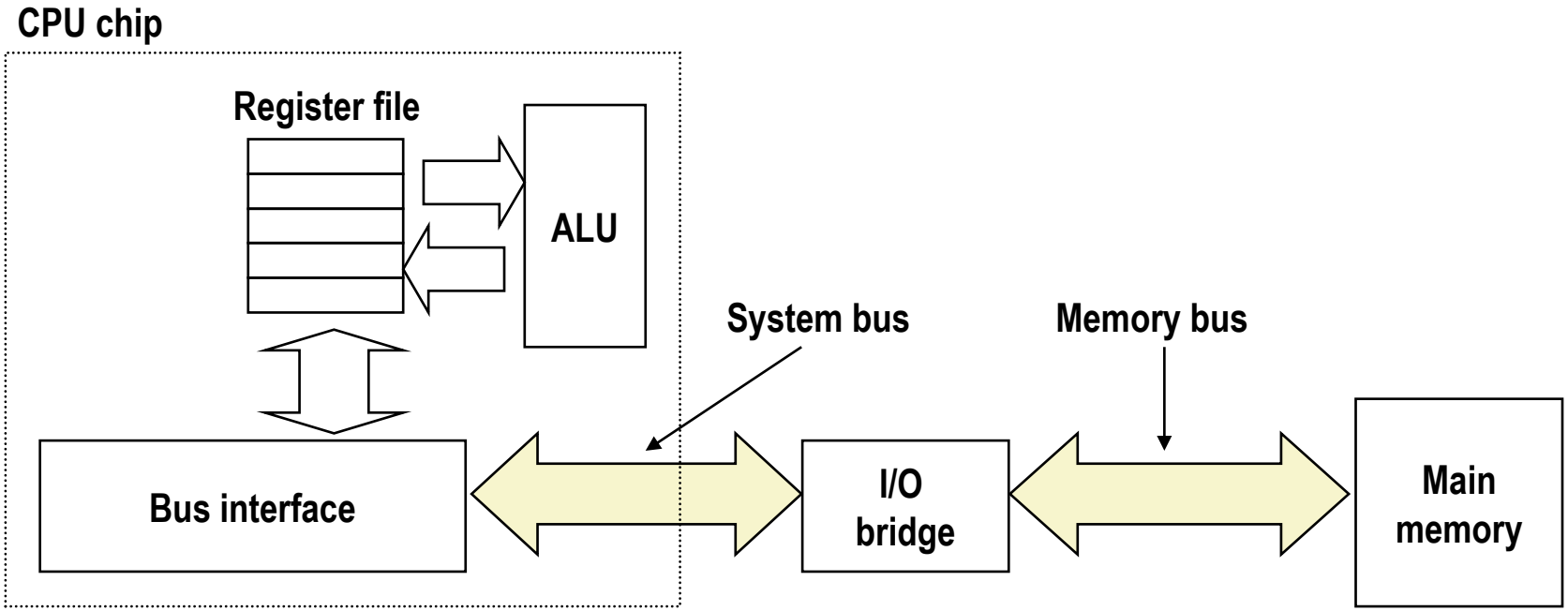

Memory Read Transaction (1)

- CPU places address A on the memory bus.

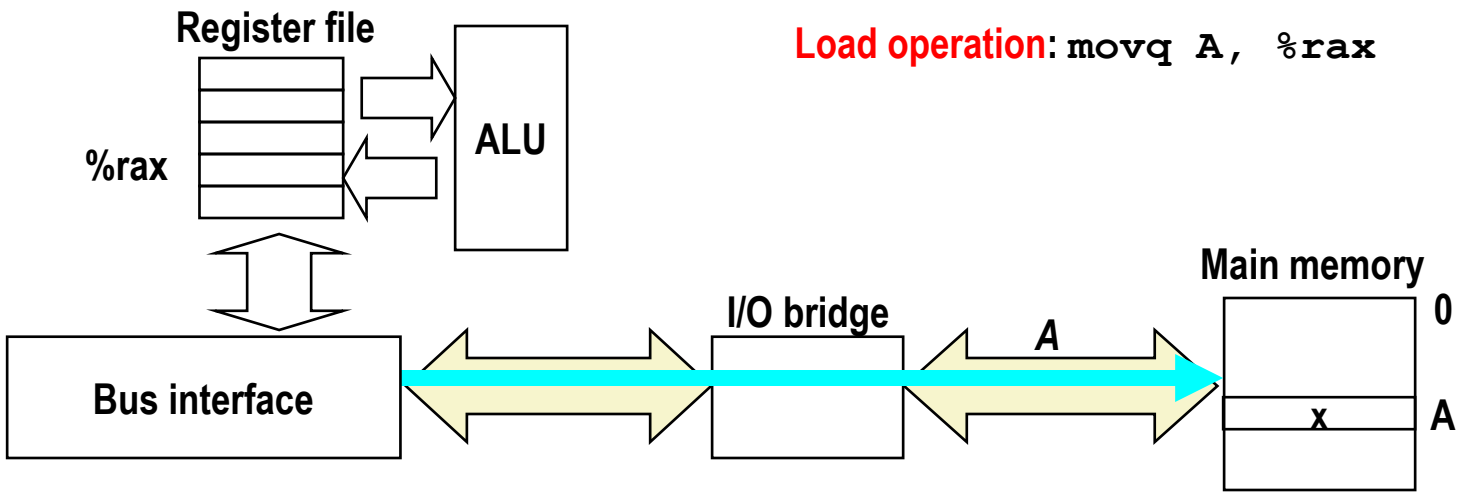

Memory Read Transaction (2)

- **Main memory reads address A from the memory bus, retrieves word x that is stored at address A, and places it on the bus.**

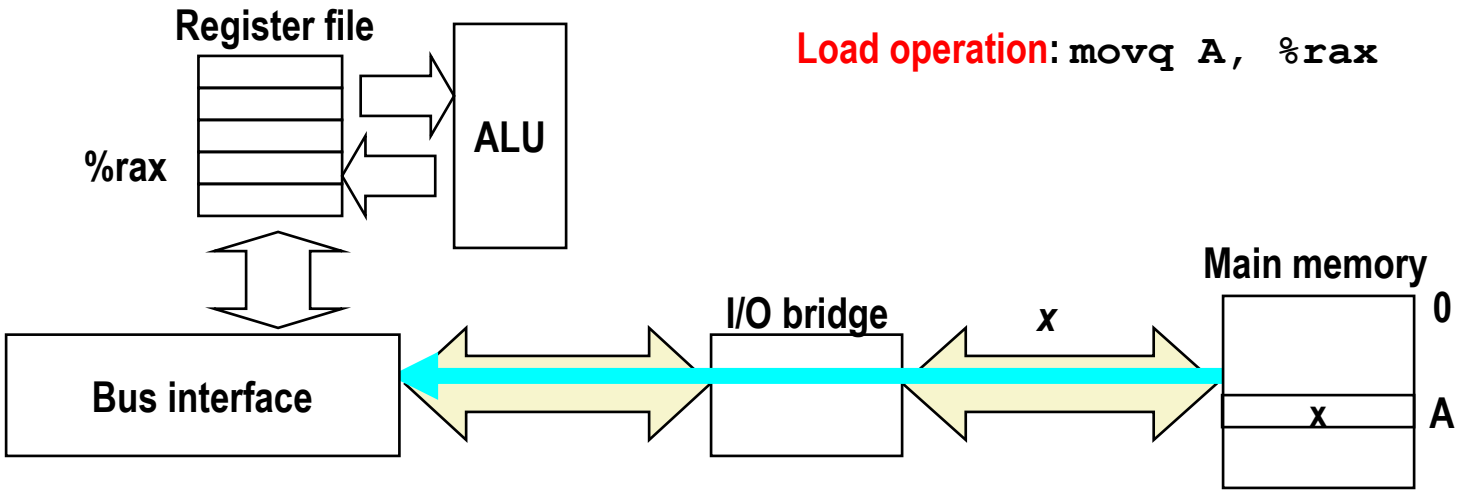

Memory Read Transaction (3)

- CPU reads word x from the bus and copies it into register %rax.

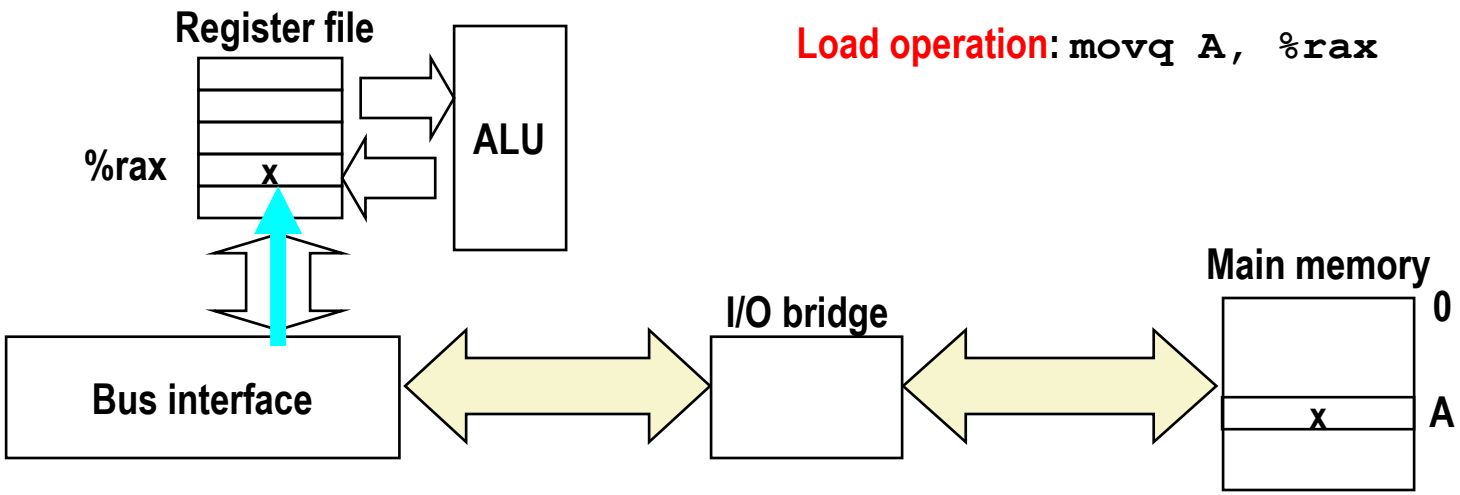

Memory Write Transaction (1)

- CPU places address A on bus. Main memory reads it and waits for the corresponding data word to arrive.

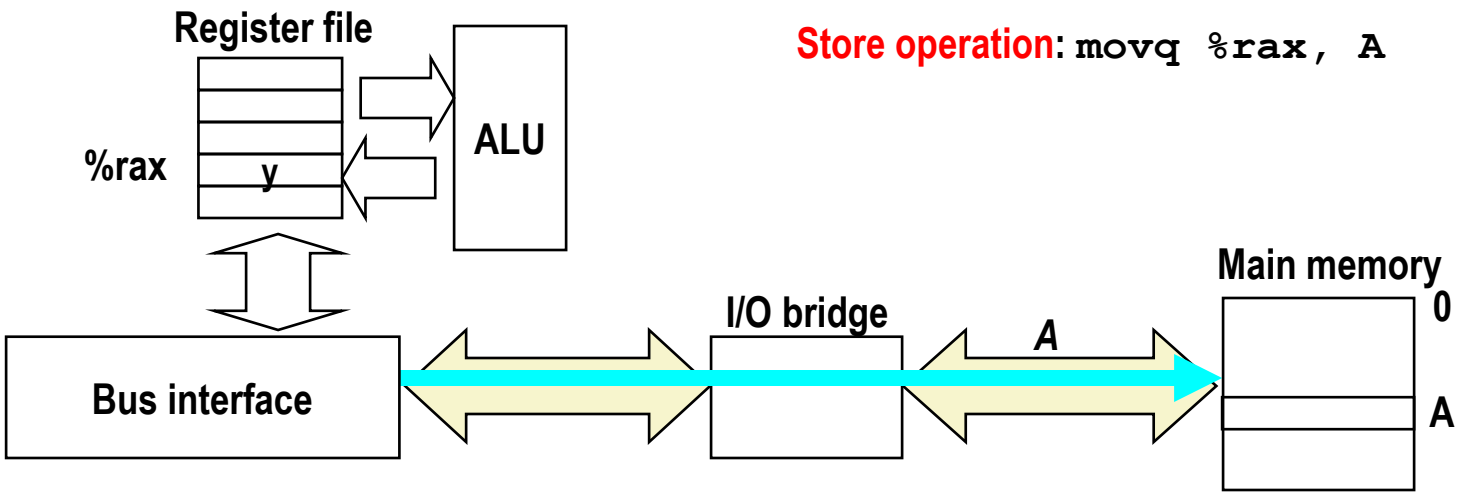

Memory Write Transaction (2)

- CPU places data word y on the bus.

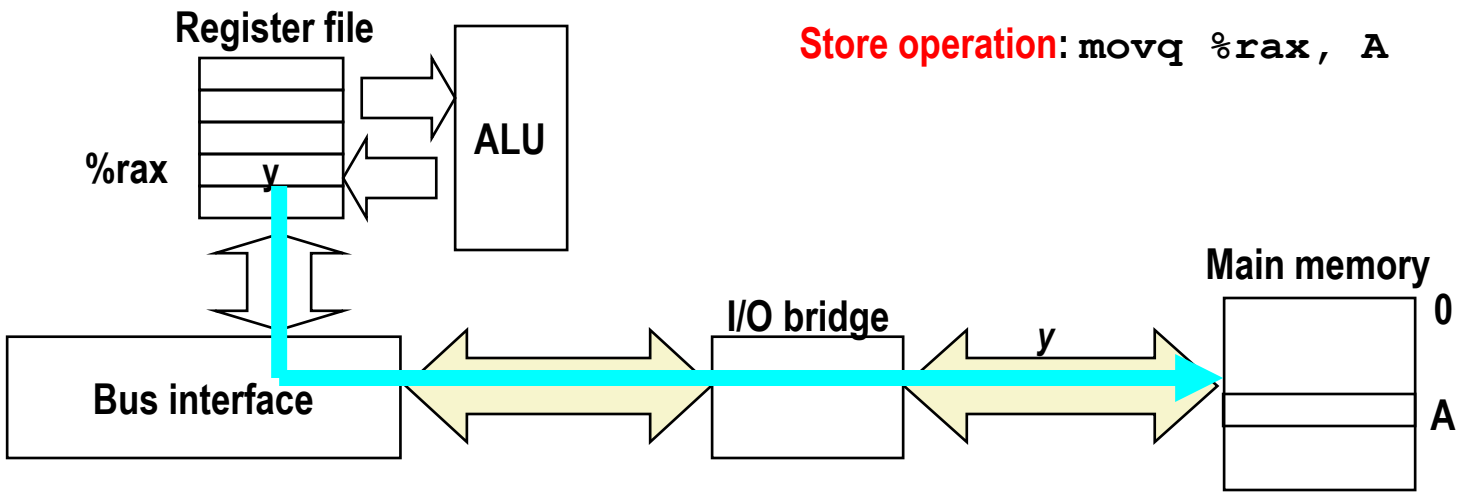

Memory Write Transaction (3)

- Main memory reads data word y from the bus and stores it at address A.

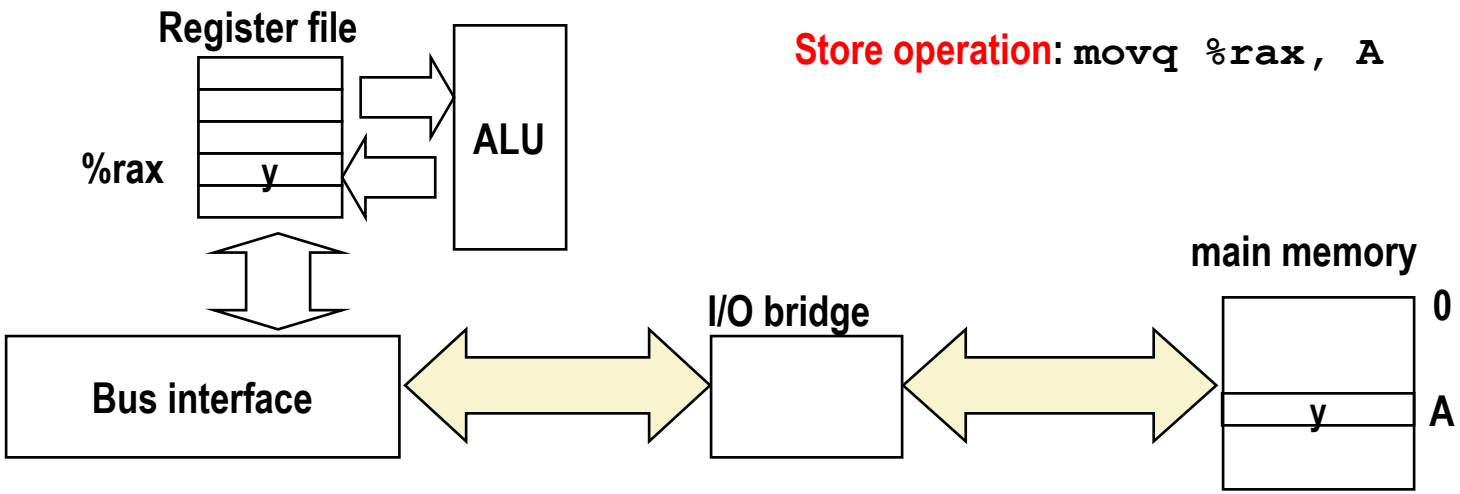

https://www.youtube.com/watch?v=hglrCQgfA6k (Intel integrated memory controller)

What's Inside A Disk Drive?

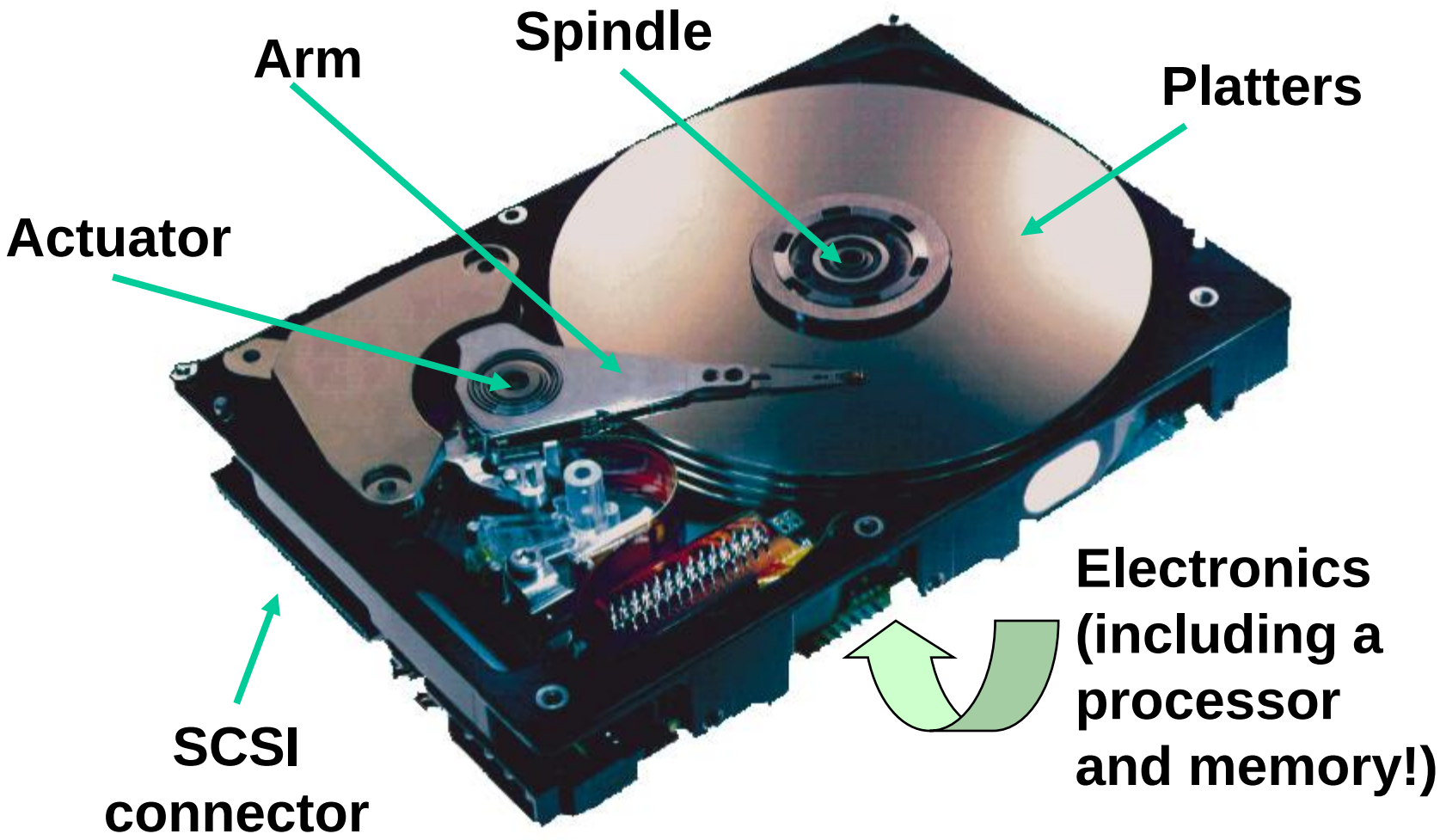

Image courtesy of Seagate Technology

Disk Geometry

- Disks consist of platters, each with two surfaces.
- Each surface consists of concentric rings called tracks.
- Each track consists of sectors separated by gaps.

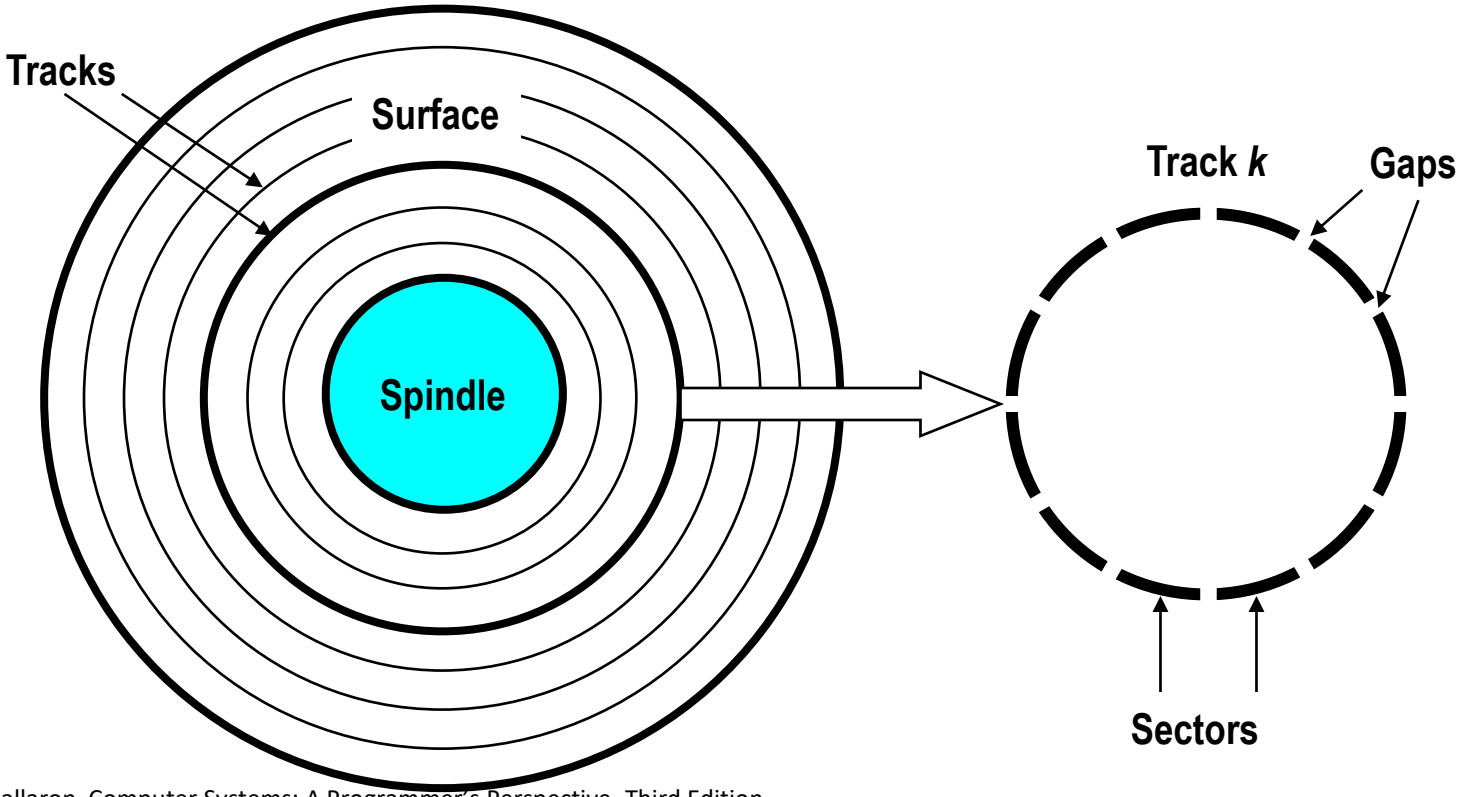

Disk Geometry (Muliple-Platter View)

- **Aligned tracks form a cylinder.**

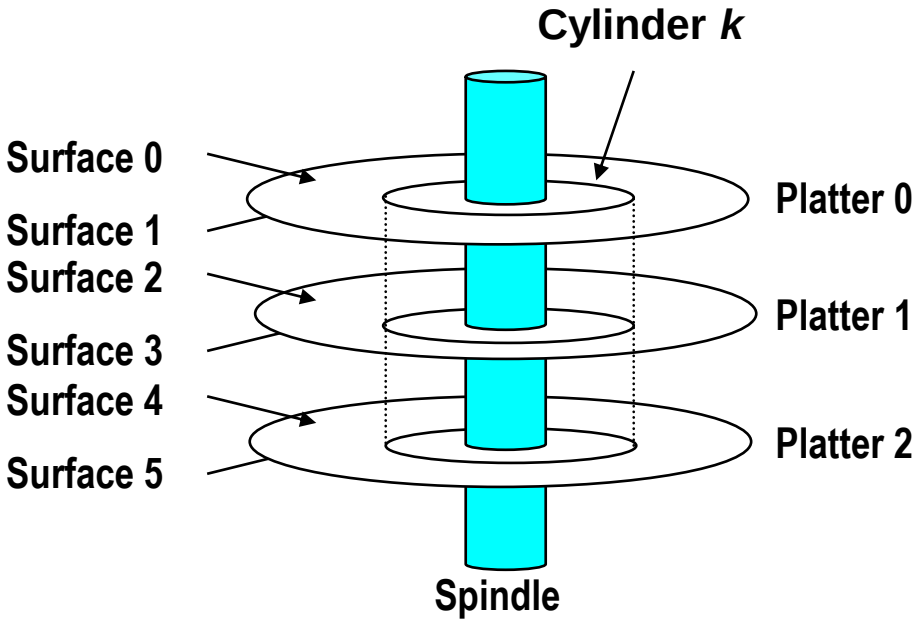

Disk Capacity

- **Capacity: maximum number of bits that can be stored.**
  - Vendors express capacity in units of gigabytes (GB), where 1 GB = 10^9 bytes, or terabytes (TB) where 1 TB = 10^{12} bytes.

- **Capacity is determined by these technology factors:**
  - Recording density (bits/in): number of bits that can be squeezed into a 1 inch segment of a track.
  - Track density (tracks/in): number of tracks that can be squeezed into a 1 inch radial segment.
  - Areal density (bits/in2): product of recording and track density.

Recording zones

- **Modern disks partition tracks into disjoint subsets called recording zones**
  - Each track in a zone has the same number of sectors, determined by the circumference of innermost track.
  - Each zone has a different number of sectors/track, outer zones have more sectors/track than inner zones.
  - So we use **average** number of sectors/track when computing capacity.

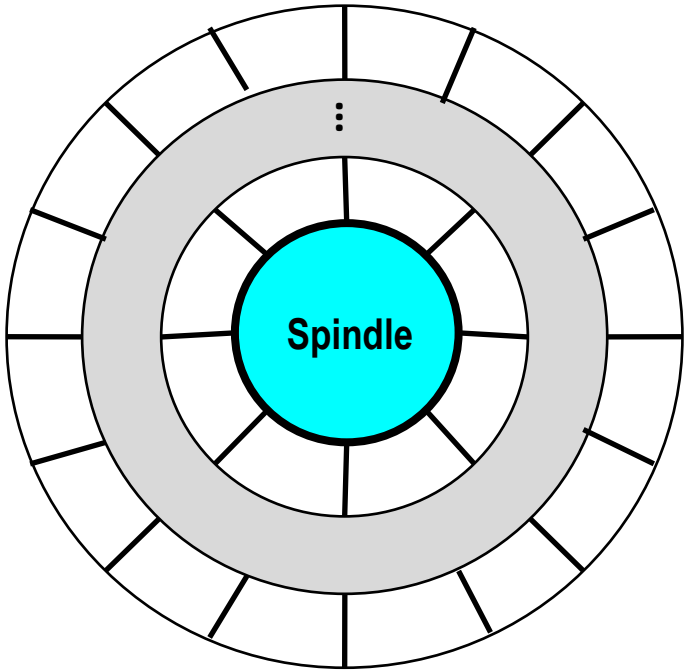

Disk Operation (Single-Platter View)

The disk surface spins at a fixed rotational rate

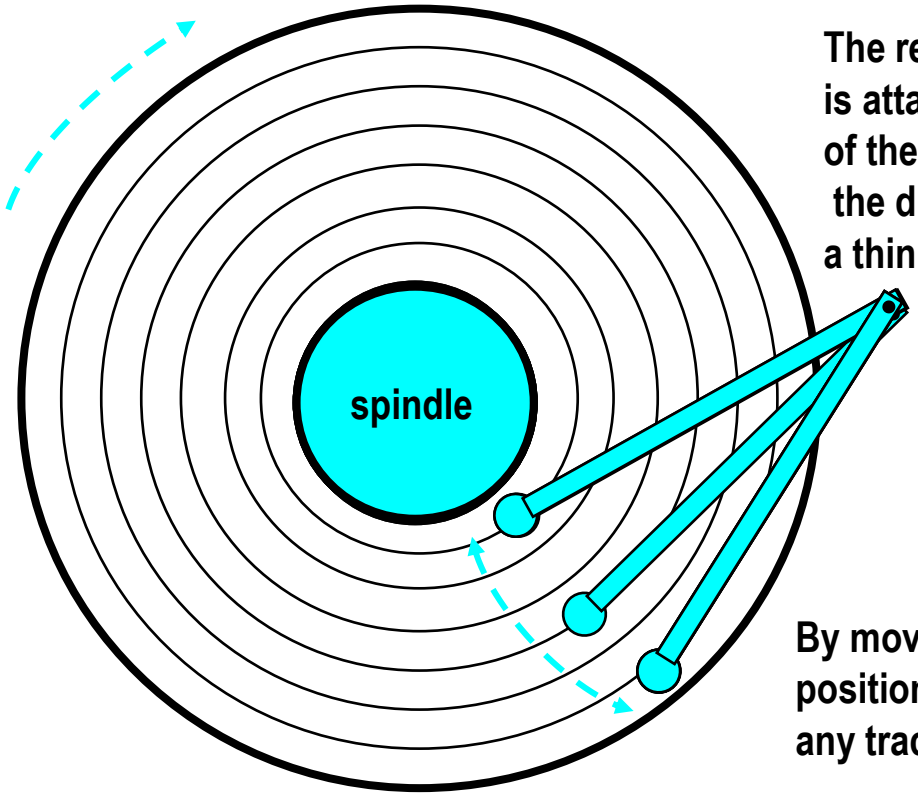

The read/write *head* is attached to the end of the *arm* and flies over the disk surface on a thin cushion of air.

By moving radially, the arm can position the read/write head over any track.

Disk Operation (Multi-Platter View)

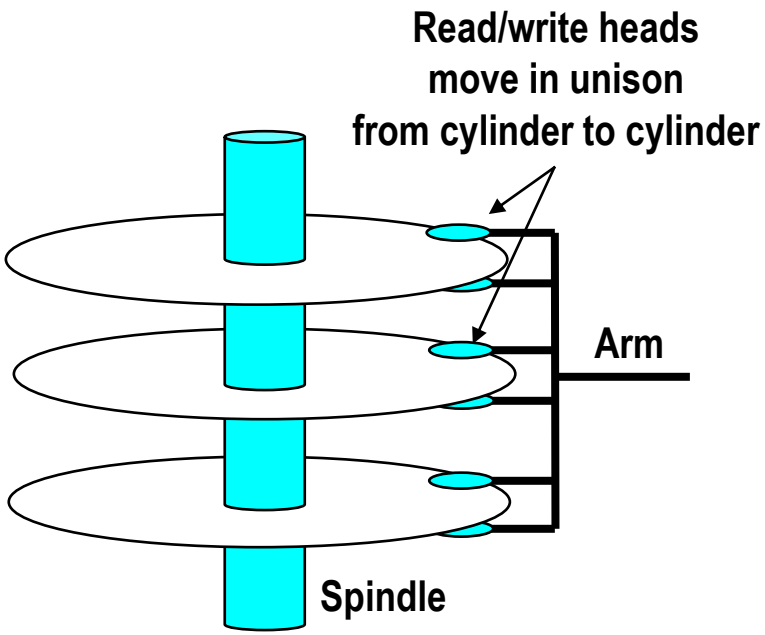

Disk Structure - top view of single platter

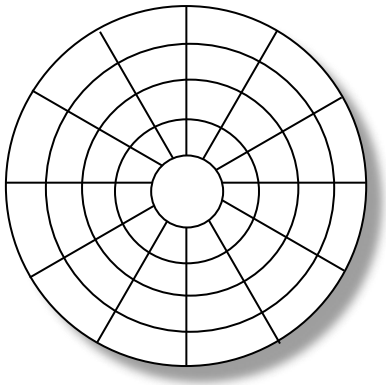

Surface organized into tracks

Tracks divided into sectors

Disk Access

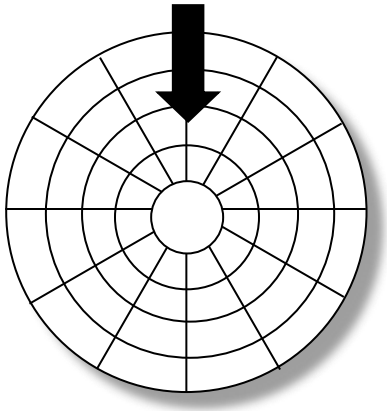

Head in position above a track

Disk Access

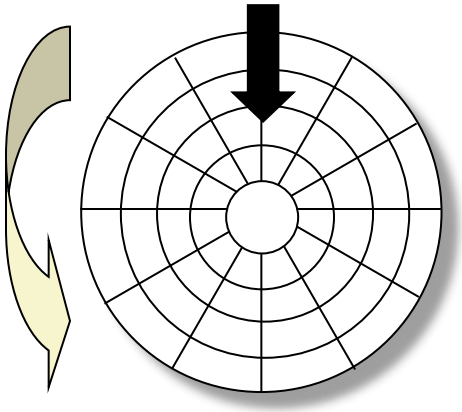

Rotation is counter-clockwise

Disk Access – Read

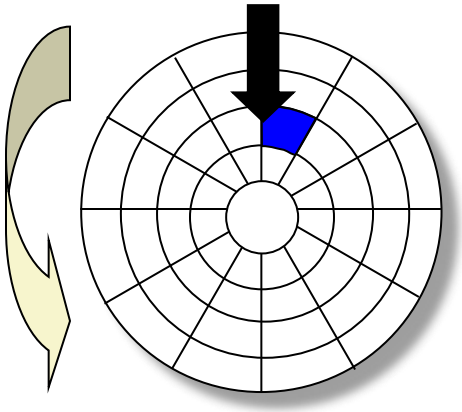

About to read blue sector

Disk Access – Read

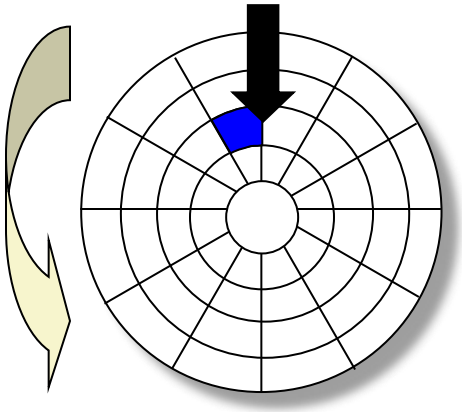

After BLUE read

After reading blue sector

Disk Access – Read

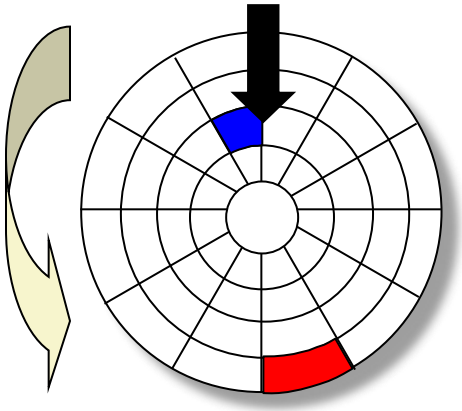

After BLUE read

Red request scheduled next

Disk Access – Seek

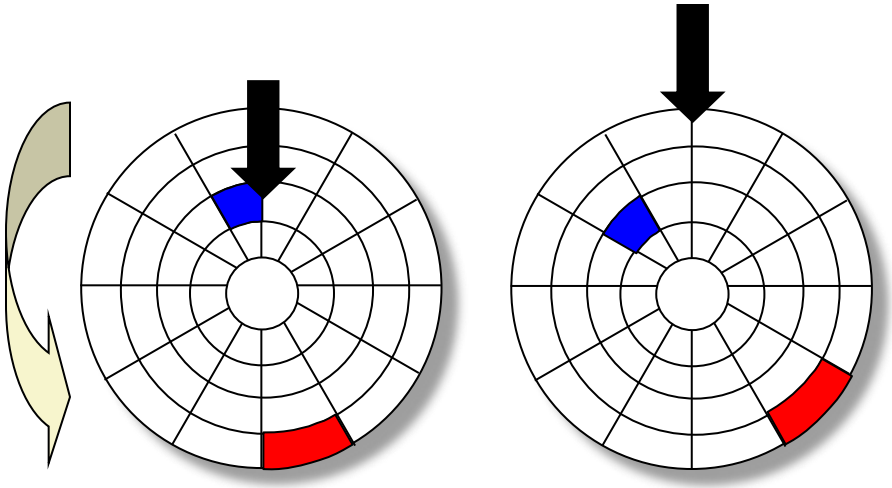

After BLUE read

Seek for RED

Seek to red's track

Disk Access – Rotational Latency

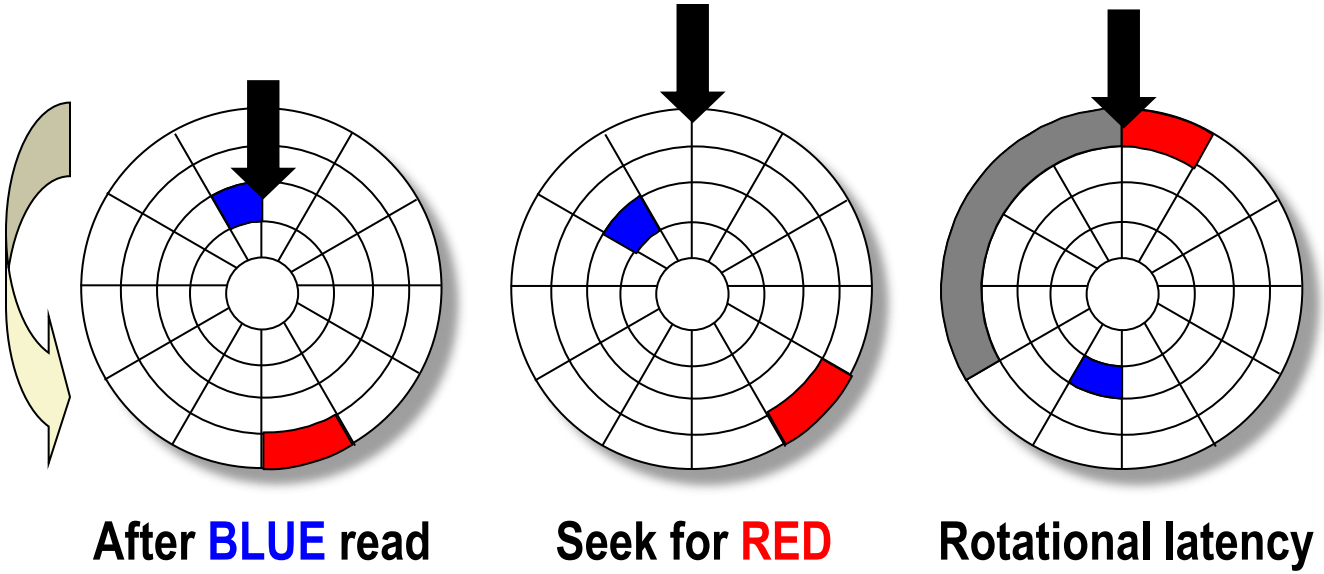

Wait for red sector to rotate around

Disk Access – Read

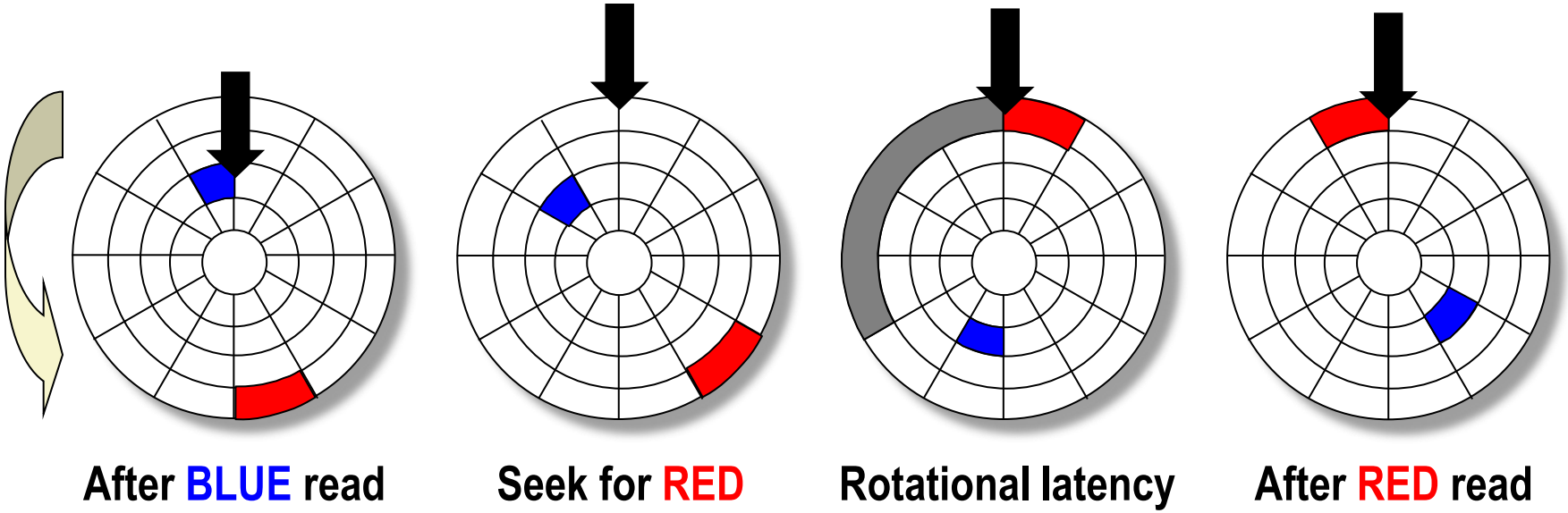

Complete read of red

Disk Access – Service Time Components

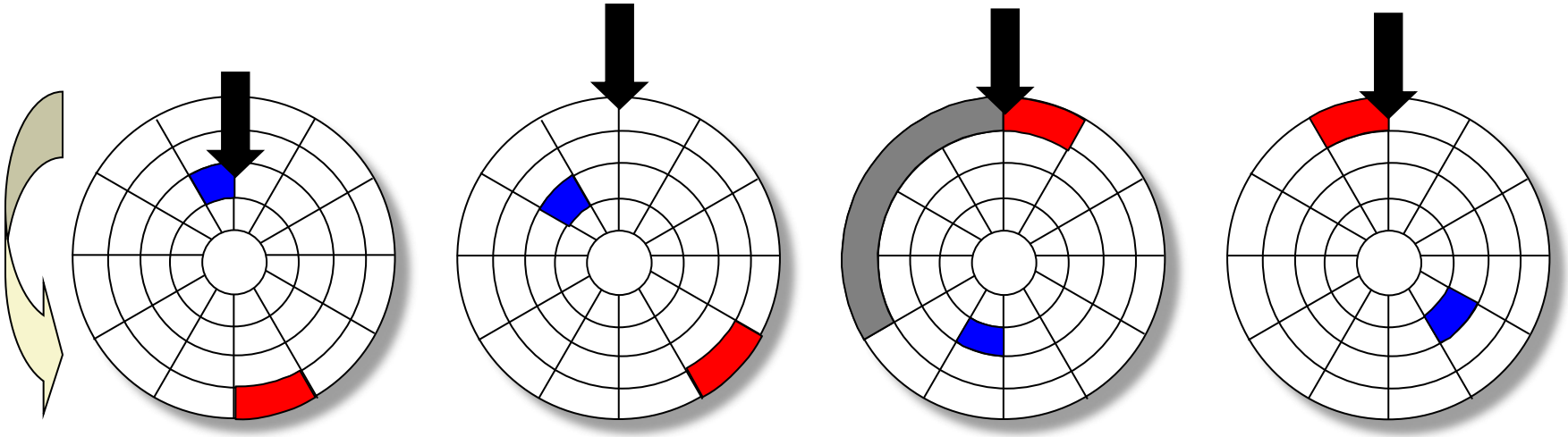

After BLUE read | Seek for RED | Rotational latency | After RED read

Data transfer | Seek | Rotational latency | Data transfer

http://www.engr.colostate.edu/~dga/video_demos/controls/ download or Brother Jones link: csuVideo

Disk Access Time

- **Average time to access some target sector approximated by :**
  - Taccess = Tavg seek + Tavg rotation + Tavg transfer
- **Seek time (Tavg seek)**
  - Time to position heads over cylinder containing target sector.
  - Typical Tavg seek is 3—9 ms
- **Rotational latency (Tavg rotation)**
  - Time waiting for first bit of target sector to pass under r/w head.
  - Tavg rotation = 1/2 x 1/RPMs x 60 sec/1 min
  - Typical Tavg rotation = 7200 RPMs
- **Transfer time (Tavg transfer)**
  - Time to read the bits in the target sector.
  - Tavg transfer = 1/RPM x 1/(avg # sectors/track) x 60 secs/1 min.

Disk Access Time Example

- **Given:**
  - Rotational rate = 7,200 RPM
  - Average seek time = 9 ms.
  - Avg # sectors/track = 400.
- **Derived:**
  - Tavg rotation = 1/2 x (60 secs/7200 RPM) x 1000 ms/sec = 4 ms.
  - Tavg transfer = 60/7200 RPM x 1/400 secs/track x 1000 ms/sec = 0.02 ms
  - Taccess = 9 ms + 4 ms + 0.02 ms
- **Important points:**
  - Access time dominated by seek time and rotational latency.
  - First bit in a sector is the most expensive, the rest are free.
  - SRAM access time is about 4 ns/doubleword, DRAM about 60 ns
    - Disk is about 40,000 times slower than SRAM,
    - 2,500 times slower then DRAM.

Logical Disk Blocks

- **Modern disks present a simpler abstract view of the complex sector geometry:**
  - The set of available sectors is modeled as a sequence of b-sized logical blocks (0, 1, 2, ...)
- **Mapping between logical blocks and actual (physical) sectors**
  - Maintained by hardware/firmware device called disk controller.
  - Converts requests for logical blocks into (surface,track,sector) triples.
- **Allows controller to set aside spare cylinders for each zone.**
  - Accounts for the difference in “formatted capacity” and “maximum capacity”.

I/O Bus

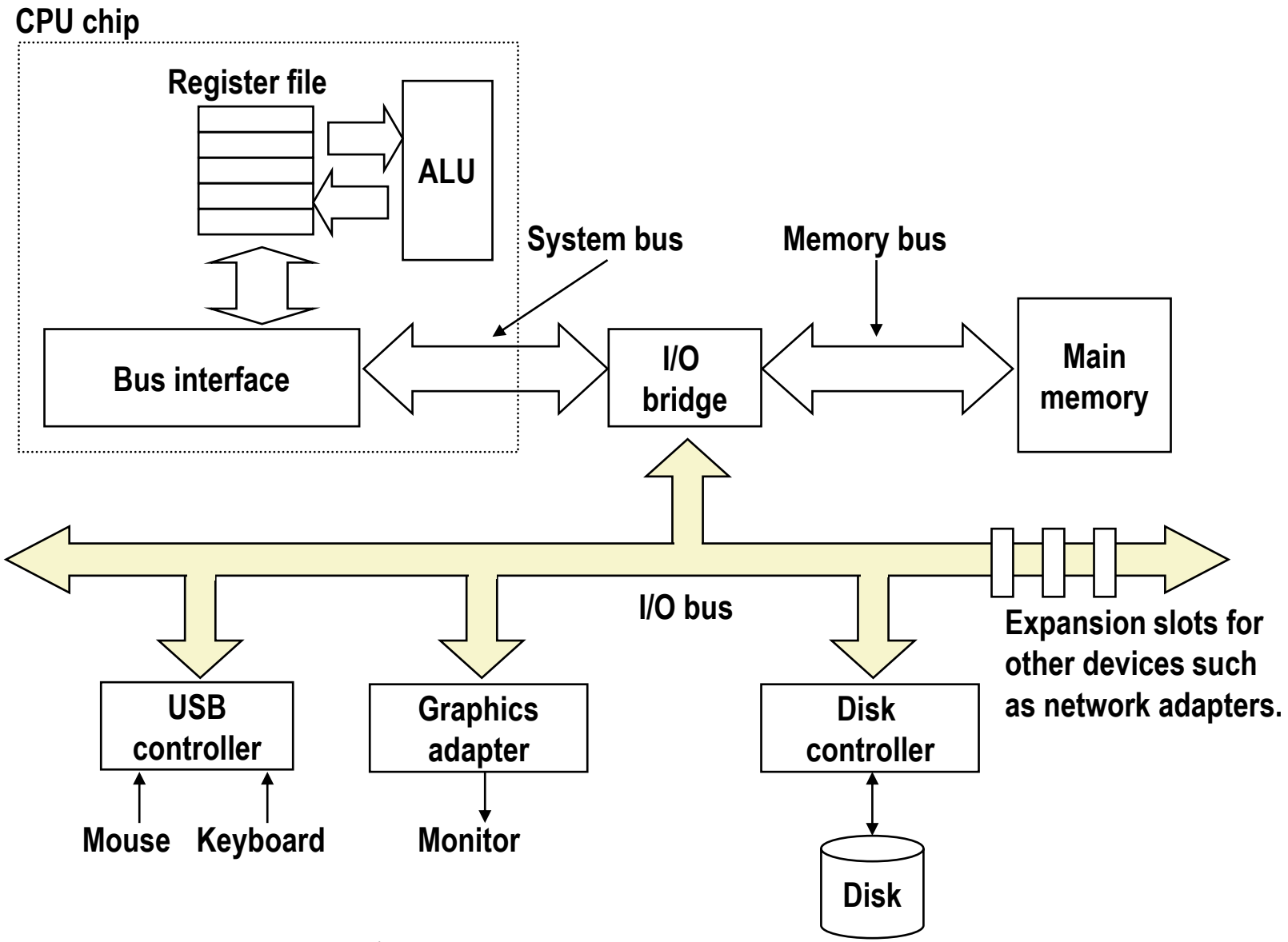
CPU chip
Register file
ALU
System bus
Memory bus
Bus interface
I/O bridge
Main memory
I/O bus
Expansion slots for other devices such as network adapters.
USB controller
Graphics adapter
Disk controller
Mouse
Keyboard
Monitor
Disk

Reading a Disk Sector (1)

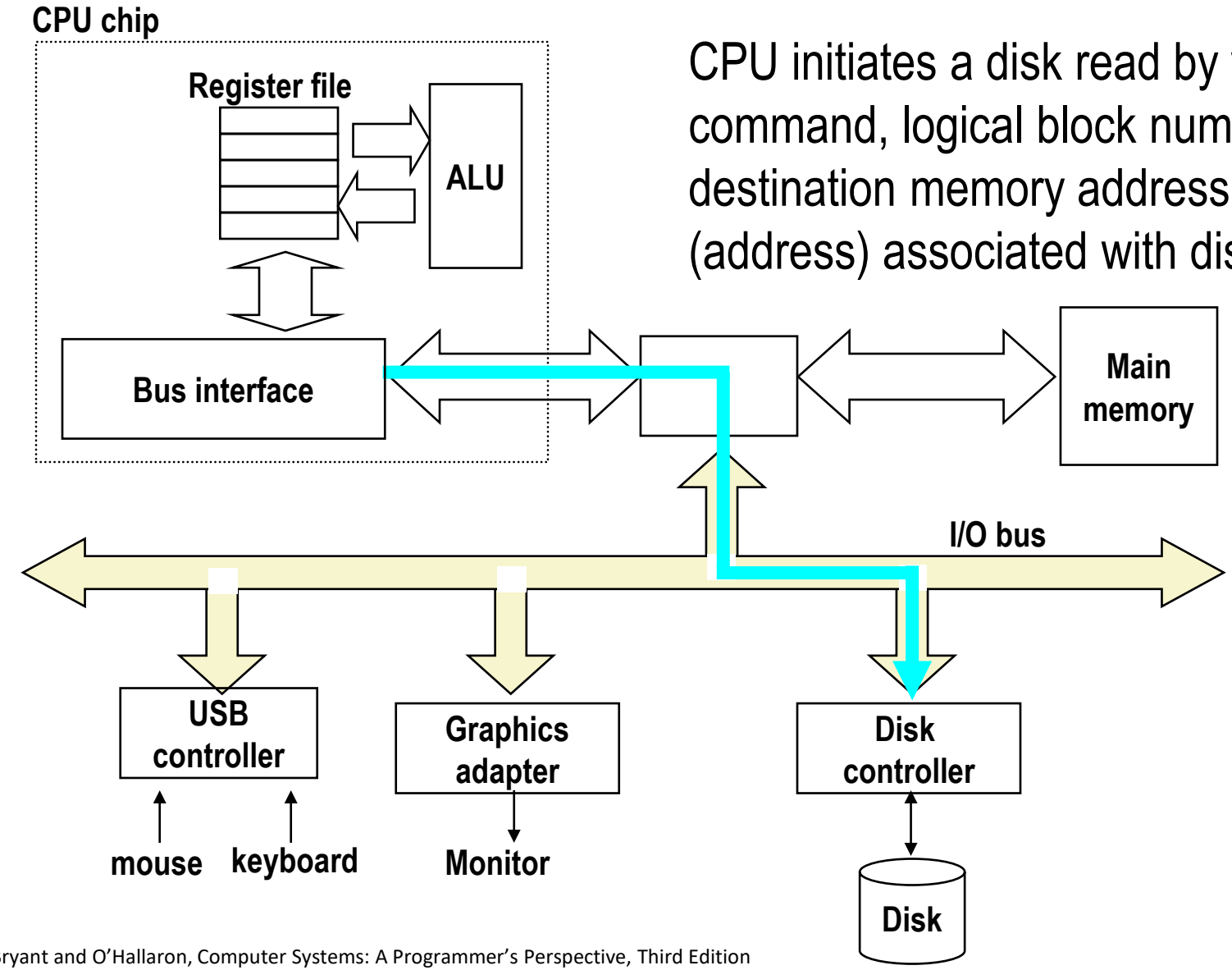

CPU initiates a disk read by writing a command, logical block number, and destination memory address to a port (address) associated with disk controller.

Reading a Disk Sector (2)

Disk controller reads the sector and performs a direct memory access (DMA) transfer into main memory.

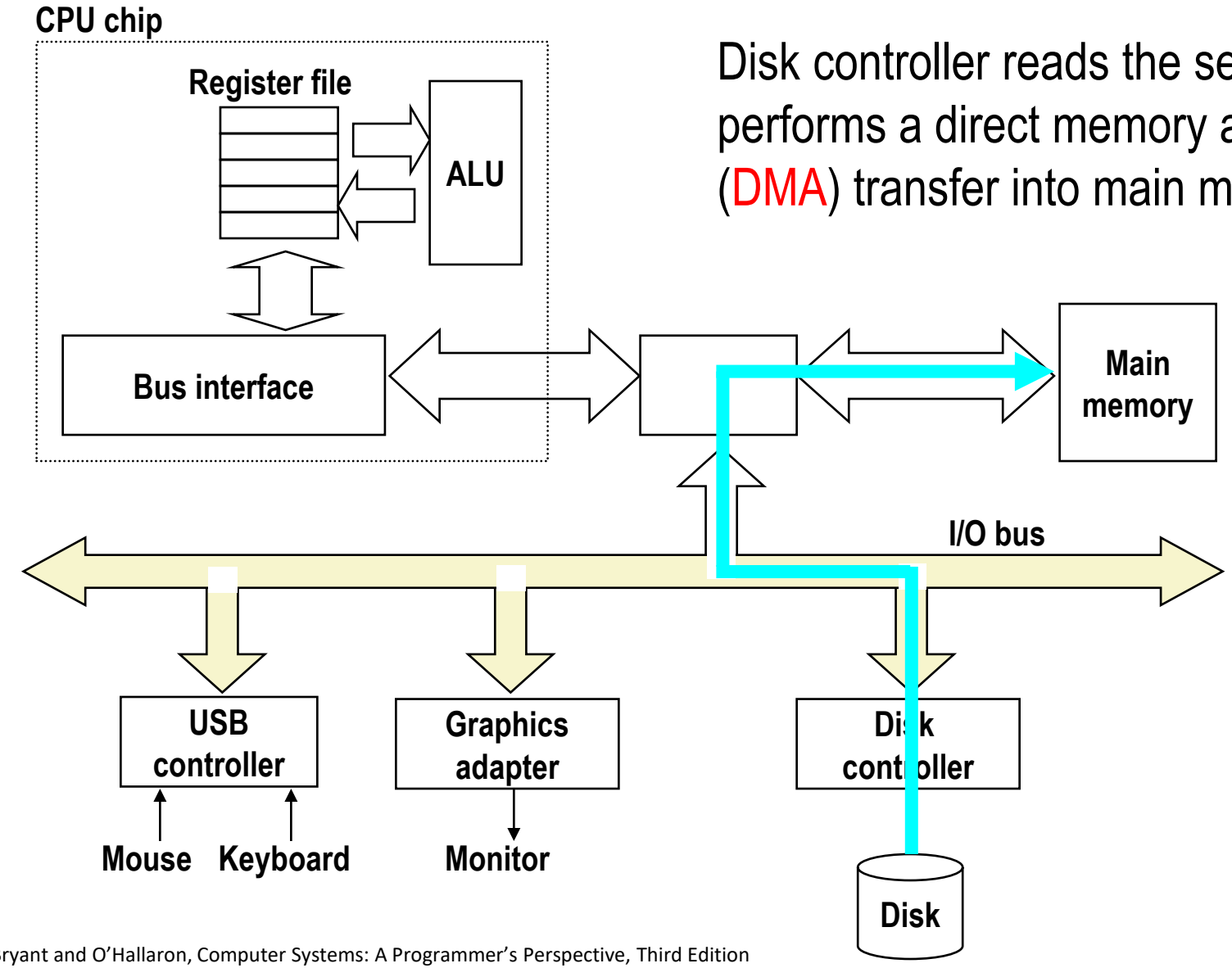

Reading a Disk Sector (3)

When the DMA transfer completes, the disk controller notifies the CPU with an *interrupt* (i.e., asserts a special "interrupt" pin on the CPU)

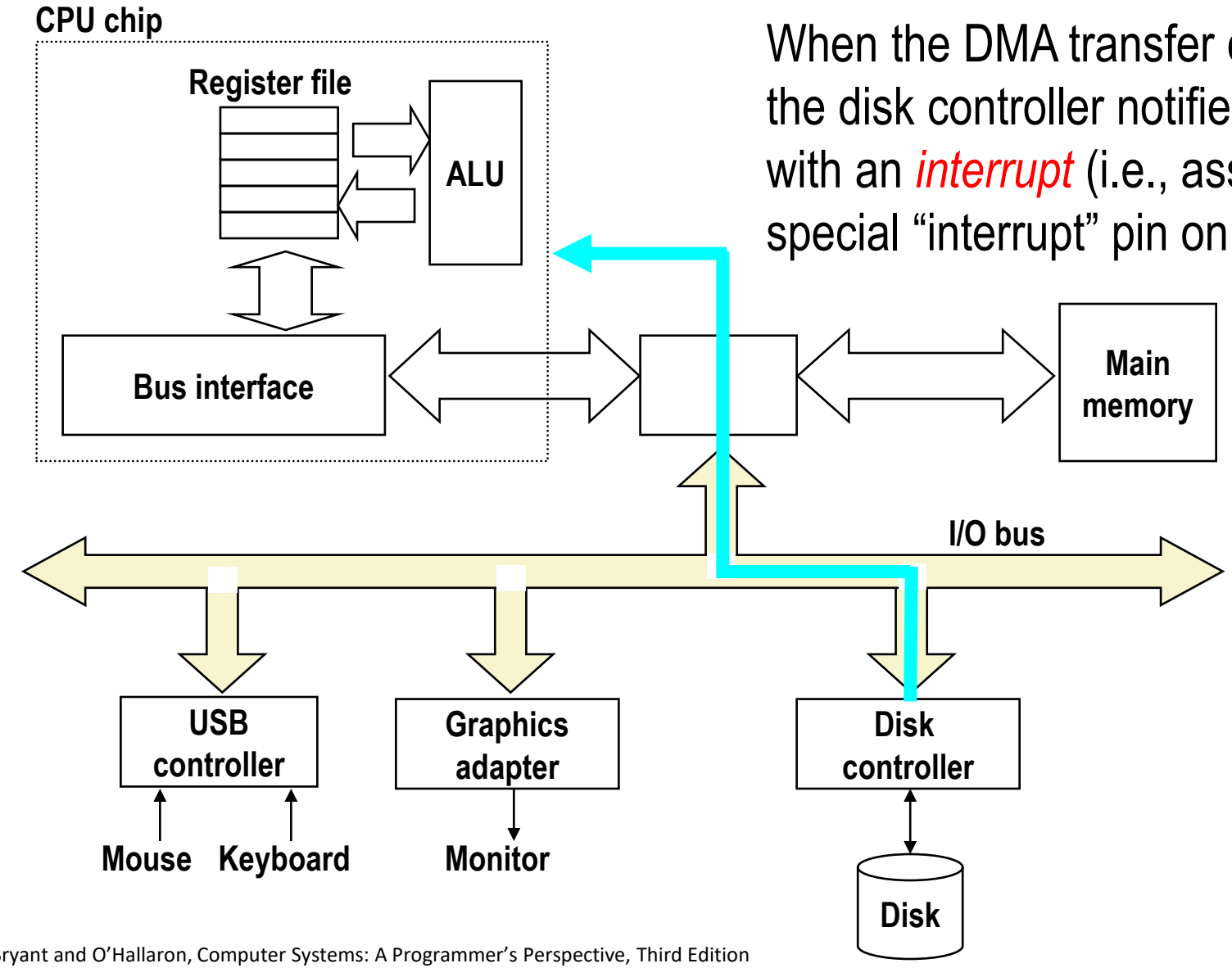

Solid State Disks (SSDs)

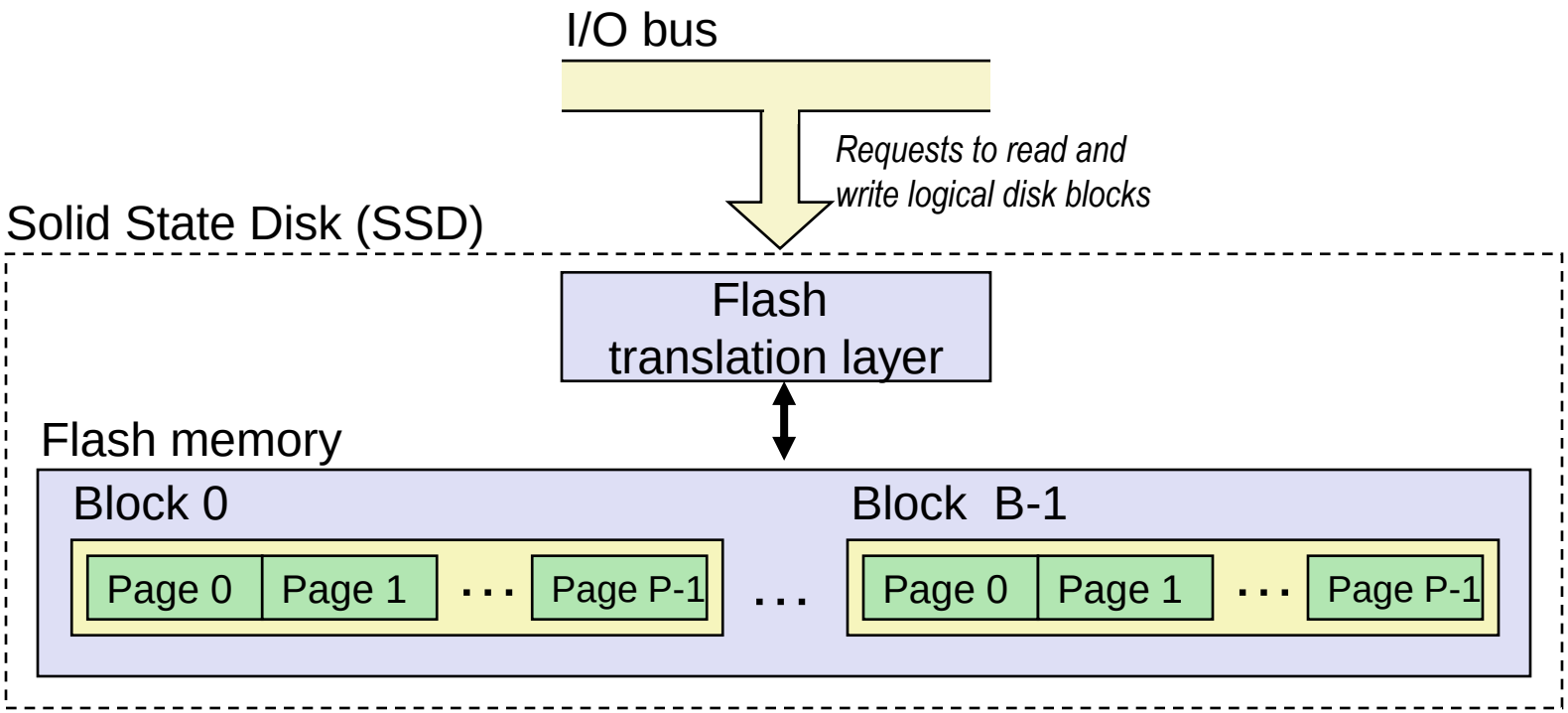

- **Pages: 512KB to 4KB, Blocks: 32 to 128 pages**
- **Data read/written in units of pages.**
- **Page can be written only after its block has been erased**
- **A block wears out after about 100,000 repeated writes.**

SSD Performance Characteristics

Sequential read tput	**550 MB/s**	**Sequential write tput**	**470 MB/s**
Random read tput	**365 MB/s**	**Random write tput**	**303 MB/s**
Avg seq read time	**50 us**	**Avg seq write time**	**60 us**

- **Sequential access faster than random access**
  - Common theme in the memory hierarchy
- **Random writes are somewhat slower**
  - Erasing a block takes a long time (~1 ms)
  - Modifying a block page requires all other pages to be copied to new block
  - In earlier SSDs, the read/write gap was much larger.

Source: Intel SSD 730 product specification.

SSD Tradeoffs vs Rotating Disks

- **Advantages**
  - No moving parts → faster, less power, more rugged
- **Disadvantages**
  - Have the potential to wear out
    - Mitigated by "wear leveling logic" in flash translation layer
    - E.g. Intel SSD 730 guarantees 128 petabyte (128×10^{15} bytes) of writes before they wear out
  - In 2015, about 30 times more expensive per byte
  - In 2020, about 2 times more expensive per byte (for smaller sizes)
- **Applications**
  - MP3 players, smart phones, laptops
  - Common in desktops and servers

New Forms of Non-Volatile Memory

- **Optane (3D Xpoint) from Intel and Micron:**
  - https://www.youtube.com/watch?v=WwH5Q8ZFJvw (TECHquickie – 2017)
  - http://www.computerworld.com/article/2951869/computer-hardware/intel-and-micron-unveil-3d-xpoint-a-new-class-of-memory.html (July 2015)
  - https://www.sigarch.org/a-vision-of-persistence/
  - https://www.howtogeek.com/317294/what-is-intel-optane-memory/
  - https://www.youtube.com/watch?v=Sm9w_GxK9yY (Austin Evans, Intel sponsored)
- **Carbon Nanotube Memory**
  - http://spectrum.ieee.org/nanoclast/semiconductors/materials/nrams-ship-may-have-finally-come-in/
- **Other types: MRAM, MeRAM, Memistor, NRAM, STT-RAM, PCM, CBRAM, RRAM, Millipede and Racetrack**
  - http://cacm.acm.org/magazines/2016/1/195739-better-memory/fulltext (pdf)
  - http://en.wikipedia.org/wiki/Computer_memory
- **DNA -** http://www.computerworld.com/article/2506012/emerging-technology/harvard-stores-70-billion-books-using-dna.html
  - https://www.hpcwire.com/2017/07/18/researchers-use-dna-store-retrieve-digital-movie/

Storage Trends

SRAM

Metric	1985	1990	1995	2000	2005	2010	2015	*2015:1985*
$/MB	2,900	320	256	100	75	60	*320*	*116*
access (ns)	150	35	15	3	2	1.5	*200*	*115*

DRAM

Metric	1985	1990	1995	2000	2005	2010	2015	*2015:1985*
$/MB	880	100	30	1	0.1	0.06	0.02	*44,000*
access (ns)	200	100	70	60	50	40	20	*10*
typical size (MB)	0.256	4	16	64	2,000	8,000	16.000	*62,500*

Disk

Metric	1985	1990	1995	2000	2005	2010	2015	*2015:1985*
$/GB	100,000	8,000	300	10	5	0.3	0.03	*3,333,333*
access (ms)	75	28	10	8	*5*	*3*	*3*	*25*
typical size (GB)	0.01	0.16	1	20	160	1,500	3,000	*300,000*

CPU Clock Rates

Inflection point in computer history when designers hit the "Power Wall"

	1985	1990	1995	2003	2005	2010	2015	*2015:1985*
CPU	80286	80386	Pentium	P-4	Core 2	Core i7(n)	Core i7(h)	
Clock rate (MHz)	6	20	150	3,300	2,000	2,500	3,000	500
Cycle time (ns)	166	50	6	0.30	0.50	0.4	0.33	500
Cores	1	1	1	1	2	4	4	4
Effective cycle time (ns)	166	50	6	0.30	0.25	0.10	0.08	2,075

http://en.wikipedia.org/wiki/Transistor_count

(n) Nehalem processor
(h) Haswell processor

The CPU-Memory Gap

The gap widens between DRAM, disk, and CPU speeds.

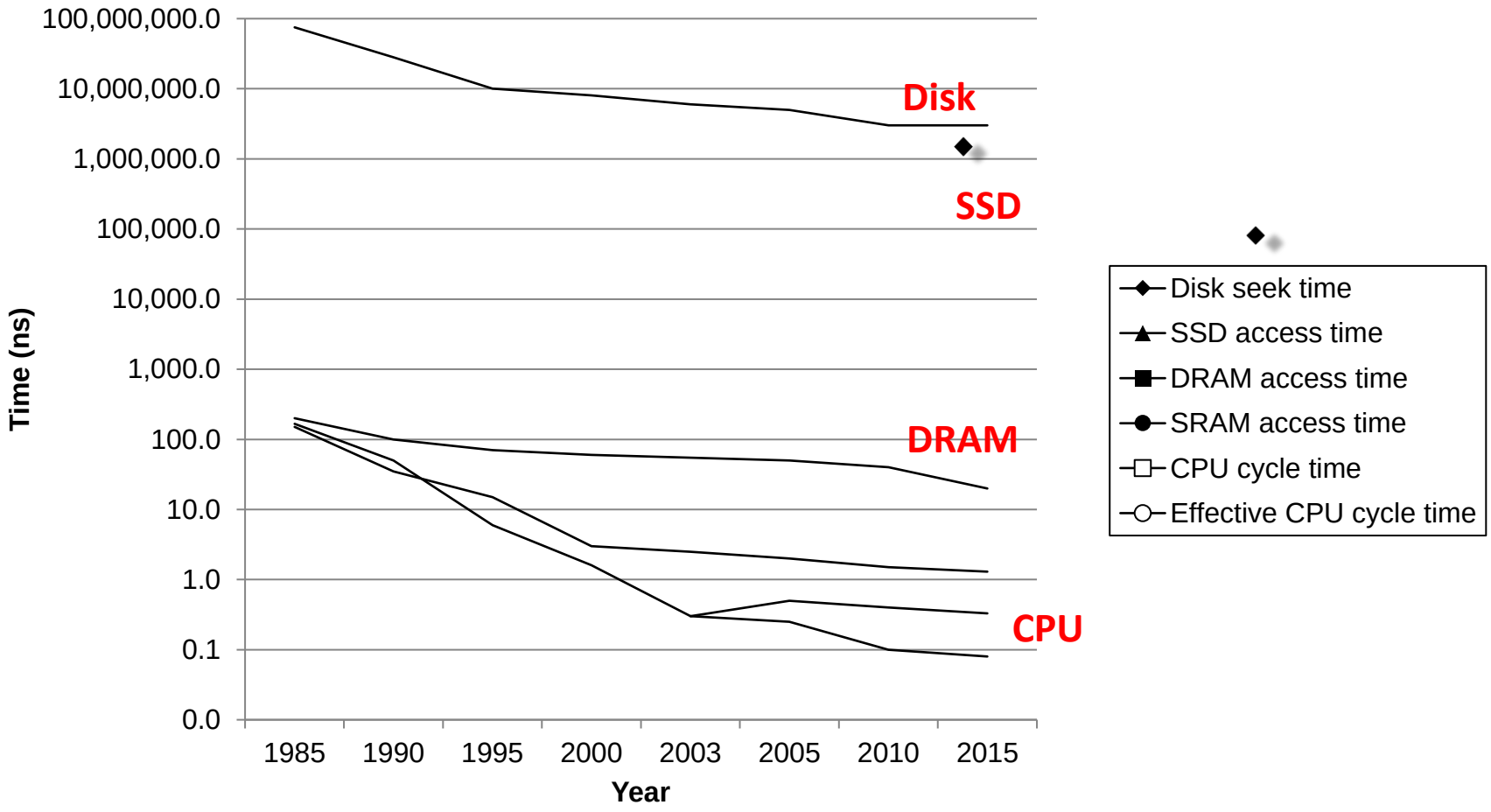

Locality to the Rescue!

The key to bridging this CPU-Memory gap is a fundamental property of computer programs known as locality.

Memory Hierarchies

- **Some fundamental and enduring properties of hardware and software:**
  - Fast storage technologies cost more per byte, have less capacity, and require more power (heat!).
  - The gap between CPU and main memory speed is widening.

Summary

- **Many types of memory and storage**
  - SRAM (volatile, used for caches)
  - DRAM (volatile, used for main memory)
  - Disks (non-volatile, used for secondary storage)
  - SSDs (non-volatile, used for secondary storage)
  - 3D Xpoint (non-volatile, used for secondary storage, for main memory?)
  - Many others …

- **The speed gap between CPU, memory and mass storage continues to widen.**