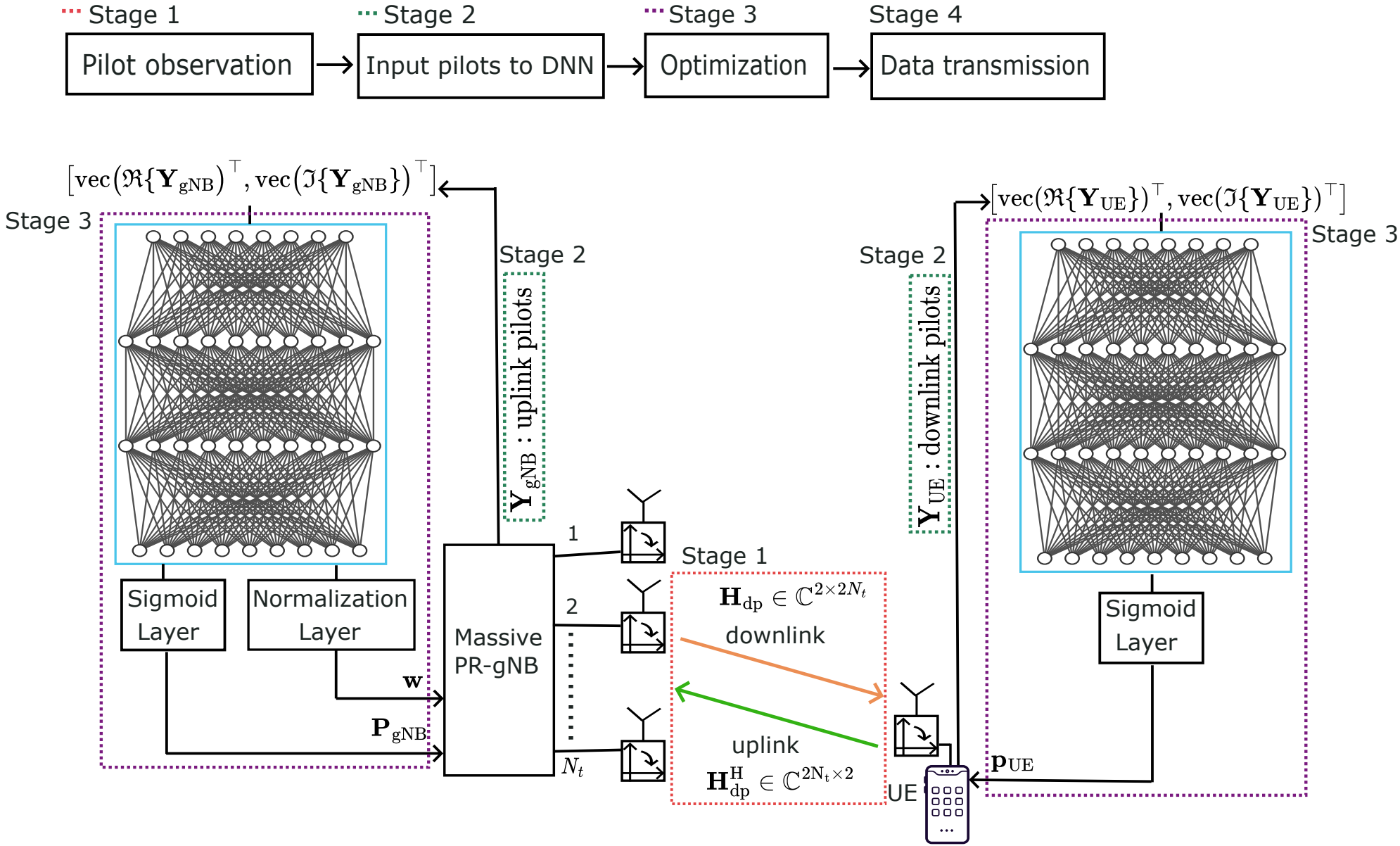
Stage 1
Pilot observation
Stage 2
Input pilots to DNN
Stage 3
Optimization
Stage 4
Data transmission
$[\mathrm{vec}(\Re\{\mathbf{Y}_{\mathrm{gNB}}\})^\top, \mathrm{vec}(\Im\{\mathbf{Y}_{\mathrm{gNB}}\})^\top]$
Stage 3
Stage 2
$\mathbf{Y}_{\mathrm{gNB}}$: uplink pilots
Sigmoid Layer
Normalization Layer
$\mathbf{w}$
$\mathbf{P}_{\mathrm{gNB}}$
Massive PR-gNB
1
2
N_t
Stage 1
$\mathbf{H}_{\mathrm{dp}} \in \mathbb{C}^{2\times 2N_t}$
downlink
uplink
$\mathbf{H}_{\mathrm{dp}}^{\mathrm{H}} \in \mathbb{C}^{2N_t\times 2}$
UE
Stage 2
$\mathbf{Y}_{\mathrm{UE}}$: downlink pilots
$[\mathrm{vec}(\Re\{\mathbf{Y}_{\mathrm{UE}}\})^\top, \mathrm{vec}(\Im\{\mathbf{Y}_{\mathrm{UE}}\})^\top]$
Stage 3
Sigmoid Layer
$\mathbf{p}_{\mathrm{UE}}$