BACHELOR OF ENGINEERING HONOURS IN ROBOTICS AND ARTIFICIAL INTELLIGENCE

BEng Individual Major Project

Department of Engineering
School of Physics, Engineering and Computer Science
University of Hertfordshire

AI and Solar Powered Grass Cutting Robot

Report by
Tan Qi Yuan
Student ID: 031DDDDD | UH ID: qt24aae

Supervisor
Wong Kim Siong

Date of Submission: 03 April 2026

DECLARATION STATEMENT

I certify that the work submitted is my own and that any material derived or quoted from the published or unpublished work of other persons has been duly acknowledged (ref. UPR AS/C/6.1, Appendix I, Section 2 - Section on cheating and plagiarism).

I confirm that any study conducted as part of my project that involved human participants has been approved in accordance with UH Ethical regulations and the protocol number(s) is/are: N/A

Student Full Name: Tan Qi Yuan

Student Registration Number: 031DDDDD

Signed: .....

03 / 04 / 2026

Date: .....

ABSTRACT

This project describes the design and development of an AI and solar-powered grass cutting robot purposely for residential lawn maintenance. The primary motivation for this work is to solve the environmental and operational limitations of traditional petrol-powered mowers. Due to traditional petrol-powered mowers require manual operation and rely on fossil fuels. Gasoline emissions produce gases that contribute to the greenhouse effect and environmental pollution. Make use of renewable solar energy, intelligent sensor and a Raspberry Pi 4B-based control architecture. This project aims to demonstrate a prototype capable of autonomous or semi-autonomous operation.

The hardware system integrates two Dexter solar panels connected in series to a 3S3P lithium battery pack and managed by a 12.6V battery protection board and solar charge controller. Then output passes through an LM2596 step-down voltage regulator to power the Raspberry Pi controller. Locomotion is achieved using four 5V DC motors arranged in a two-wheel drive (2WD) configuration, controlled via an L298N motor driver. Another L298N drives a 5V DC motor with a cable tie on it to simulate the zip tie grass cutter. An RPLidar A1M8 sensor is interfaced to the Raspberry Pi over USB for environmental scanning. ROS2 Kilted is deployed on the Ubuntu Server 24.04 LTS with XFCE lightweight desktop environment as the robotics middleware. It allows sensor data streaming and navigates the robot.

The project successfully achieved teleoperation via VNC remote desktop, real-time LIDAR scanning in RVIZ2 and SLAM mapping with the environment map saved using [map_saver_cli]. Besides that, a functional solar charging circuit verified and tested with a multimeter. However, full autonomous navigation could not be completed within the project timeline. Due to a mistake, SD card broken without any reason. It resulted in the loss of all previously recorded SLAM data and installed ROS2 packages. Required a complete software reinstallation and significantly reducing the time available for SLAM development. Additionally, the solar panels in the current configuration were found to be insufficient for powering the full system simultaneously. The Pi Camera module also could not be activated due to incompatible package dependencies on the Ubuntu Server operating system.

The project demonstrates the feasibility of combining low-cost renewable energy with an open-source robotics stack. The prototype serves as a working foundation for future development. Key recommendations include upgrading the current solar panel array for sustainable charging. Adopting a USB camera that compatible with Ubuntu Server OS and continuing to develop Nav2-based autonomous navigation.

ACKNOWLEDGEMENTS

I would like to express my sincere gratitude to my project supervisor, Mr. Wong Kim Siong, for his consistent guidance, patient feedback, and encouragement throughout the duration of this project. His technical advice on robotics integration and project scoping was invaluable. I would like to thank him again for lending me the solar panels for this project.

I would also like to thank PSB Academy and the University of Hertfordshire for providing this Individual Major Project opportunity and for the academic support throughout the programme. Specially thanks to the laboratory technicians at PSB Academy for facilitating access to components such as the 3D printer and workshop equipment. The components borrowed from the lab including the Raspberry Pi 4B kit, RPLidar A1M8, motor driver boards, solar panels, and many other items were essential to building this prototype without needing to purchase everything independently.

Finally, I thank the open-source robotics community, especially the ROS2 and RPLidar communities. Those documentation and tutorials supported my learning and problem-solving throughout this project. Also thank the many hobbyists and engineers who freely share tutorials and troubleshooting experiences online. Without those resources, solving the technical challenges in this project would have taken much longer.

TABLE OF CONTENTS

DECLARATION STATEMENT 2
ABSTRACT 3
ACKNOWLEDGEMENTS 4
TABLE OF CONTENTS 5
LIST OF FIGURES 7
LIST OF TABLES 7
GLOSSARY 8
1. Introduction and Background 9
1.1 Background and Motivation 9
1.2 Aims and Objectives 10
1.3 Report Structure 10
2. Literature Review 11
2.1 Autonomous and Solar-Powered Grass Cutting Robots 11
2.2 LIDAR-Based Navigation and SLAM 12
2.3 Motor Control and Hardware Integration 13
2.4 Solar Energy and Battery Management 14
2.5 Robotics Frameworks and Software Tools 15
3. Description of Project Work and Methodology 16
3.1 System Architecture Overview 16
3.2 Hardware Implementation 16
3.2.1 Power System 16
3.2.2 Locomotion Subsystem 18
3.2.3 Cutting Mechanism 19
3.2.4 Sensing Subsystem 19
3.2.5 Chassis and Physical Assembly 20
3.2.6 Uninstalled Parts 20
3.3 Software Flowchart 21
3.4 Software Implementation 22
3.4.1 Operating System and Desktop Environment 22
3.4.2 ROS2 Installation and Package Setup 22
3.4.3 LIDAR Integration and Coordinate Frames 23
3.4.4 SLAM Mapping and Map Saving 23
3.4.5 Navigation Stack Configuration and Current Status 24
4. Discussion and Results 25
4.1 Summary of Results 25
4.2 Power System Analysis 26
4.3 Locomotion and Teleop Results 26
4.4 LIDAR and SLAM Attempts 27

4.5 Limitations and Critical Evaluation 27
5. Conclusions 28
6. Further Development 29
6.1 Autonomous Navigation & Energy System Optimisation 29
6.2 Computer Vision & Intelligent Obstacle Detection 29
6.3 Mechanical Design & Environmental Protection 29
6.4 Motion Control & User Interface Development 29
6.5 System Reliability & Data Management 29
7. Project Management and Quality Management Review 30
7.1 Project Management Review 30
7.1.1 Gantt Chart Comparison 30
7.1.2 Key Changes to the Project Plan 30
7.1.3 Strengths and Weaknesses of Project Management 31
7.1.4 Time Management Improvements 31
7.2 Quality Management and Continuous Improvement 32
7.2.1 Role of Standards and Regulations 32
7.2.2 Advantages and Disadvantages of Quality Standards 32
7.2.3 Areas for Improvement and Quality Considerations 33
REFERENCES 34
APPENDIX A — Gantt Chart 36
APPENDIX B — Component List 37
APPENDIX C — Wiring Diagram 38

LIST OF FIGURES

Figure 1 The World's First Automatic Mower (Husqvarna's Solar Mower) 9
Figure 2 Chandra Sekar, P. et al. (2023) Solar Powered Grass Cutting Robot (Arduino) 11
Figure 3 CNET (2025) Lawn Mowers 11
Figure 4 Electrosal. (2022) Obstacle Avoidance & Pesticide Spreading Grass Cutting Robot .. 12
Figure 5 Hackster.io (2017) H-Bridge & Servo Shield Connection 13
Figure 6 Cults3D (2024) 3D Printed Robot Chassis 13
Figure 7 Dexter Industries. (2024) 3D Printed Robot Chassis 14
Figure 8 kuruibms (2026) Per-Cell vs. Pack Voltage Comparison Table 14
Figure 9 Synthiam (2023) ARC Project Example 15
Figure 10 Ideal Block Diagram 16
Figure 11 Model... (.n.d) BMS-20A-3S 16
Figure 12 Amazon.in. (2026) 10A 12/24V PWM Solar Charge Controller User Manual 17
Figure 13 Robot PWM Solar Charge Controller Demo 17
Figure 14 with, H. (2021) DC Motor Specifications 18
Figure 15 Robot Cutting Mechanism 19
Figure 16 www.slamtec.com. (.n.d) RPLIDAR A1M8 Specification 19
Figure 17 Kurosity. (2023) RPi 4/5 Aluminum Heatsink Case with Dual Fan 20
Figure 18 Robot Assembly with Chassis 20
Figure 19 Ideal System Flowchart 21
Figure 20 Teleop & Mapping & Save Map 23
Figure 21 Uncompleted Autonomous Navigation (RVIZ & Output) 24
Figure 22 Achieved System Block Diagram 25
Figure 23 Charge Battery with Bench Stop 26

LIST OF TABLES

Table 1 Results Summary 25

GLOSSARY

Glossary	Full Term	Short Explanation
AI	Artificial Intelligence	Computer systems that perform tasks normally requiring human intelligence, such as object detection and decision-making.
ROS2	Robot Operating System 2	Open-source middleware framework used to build and manage robot software components and their communication.
SLAM	Simultaneous Localisation and Mapping	Method allowing a robot to build a map of an unknown environment while simultaneously tracking its own position within that map.
LIDAR	Light Detection and Ranging	Sensor that measures distances by emitting laser pulses and timing their reflections, used for 2D or 3D environment mapping.
2WD	Two-Wheel Drive	Drivetrain where only two wheels receive power from the motors.
MCU	Microcontroller Unit	Compact computer on a single chip used to control external hardware devices such as motors and sensors.
MPPT	Maximum Power Point Tracking	Electronic algorithm that continuously adjusts solar panel operating conditions to extract maximum available power.
GPIO	General Purpose Input/Output	Programmable pins on a microcontroller that can send or receive digital signals to interface with external hardware.
PWM	Pulse Width Modulation	Technique of controlling power delivery by rapidly switching a signal on and off; the on/off ratio (duty cycle) determines effective power.
LDR	Light Dependent Resistor	Component whose electrical resistance drops as light intensity increases, used here to detect sunlight for charging monitoring.
RPi	Raspberry Pi	Raspberry Pi, a low-cost single-board computer used as the main controller in this project.
BMS	Battery Management System	Electronic circuit that monitors and protects a lithium battery pack from overcharging, over-discharging, and short circuits.
RVIZ2	ROS Visualisation Tool 2	Graphical 3D visualisation tool for ROS2 that displays sensor data such as LIDAR scans and coordinate frames in real time.
DXF	Drawing Exchange Format (3D file)	Standard file format for exchanging 2D and 3D technical drawing data between different CAD software programs.
YOLO	You Only Look Once (object detection)	Real-time deep learning object detection model that classifies multiple objects in a single neural network forward pass.
LTS	Long Term Support	Software release version with an extended official support and maintenance period, typically five years for Ubuntu.
VNC	Virtual Network Computing	Remote desktop protocol that transmits a computer's graphical display to another device over a network connection.
SSH	Secure Shell	Encrypted network protocol for securely accessing and managing a remote computer via a text-based command-line interface.
IMU	Inertial Measurement Unit	Electronic sensor module combining accelerometers and gyroscopes to measure a device's orientation and motion.
TF	Transform (ROS2 coordinate frame)	ROS2 library for managing and transforming coordinate frame relationships between different parts of the robot over time.
AMCL	Adaptive Monte Carlo Localisation	Probabilistic algorithm that estimates a robot's position within a known map by maintaining a set of weighted position hypotheses.
Nav2	Navigation 2 (ROS2 stack)	ROS2 navigation stack providing path planning, localisation, obstacle avoidance, and autonomous goal-following capabilities.

1. Introduction and Background

1.1 Background and Motivation

Figure 1 The World's First Automatic Mower (Husqvarna's Solar Mower)

Lawn maintenance is a daily task for millions of households worldwide, but it still highly depends on manual labour and fossil-fuel-powered equipment. Traditional petrol lawn mowers can cause significant carbon emissions, noise pollution and unsafety risks to operators. As global awareness of climate change and the need for sustainable technologies continues to grow, the demand for automated and environmentally friendly alternatives is also increasing.

Since the late 1990s, robotic lawn mowers have been commercially available such as the product Husqvarna Solar Mower. It established a market proof of concept. However, these systems normally lack intelligent obstacle avoidance but expensive. It relies on physical boundary wires rather than actual spatial mapping construction. Academic research has explored more sophisticated approaches such as integrating LIDAR-based SLAM, computer vision, and solar energy harvesting. It is affordable and open-source implementations for residential use remain rare.

This project aims to fill this gap by designing and manufacturing a low-cost autonomous grass cutting robot powered by solar energy. It makes use of open-source software and commercially available parts. The robot is built on a Raspberry Pi 4B 4GB RAM controller board that running ROS2 (Robot Operating System 2). This enables the system modular and provides access to a wide range of robotic tools and algorithms.

1.2 Aims and Objectives

Aim

To design and develop an autonomous solar-powered grass cutting robot equipped with AI-based grass detection and obstacle avoidance, enabling it to map the lawn, plan efficient cutting paths, and avoid objects in real time, operating outdoors with minimal human control.

Objectives

- Design and implement a solar charging power system using photovoltaic panels and a rechargeable lithium battery pack.
- Integrate the RPLidar A1M8 sensor with ROS2 for environmental scanning and SLAM-based mapping.
- Implement DC motor control for 2WD locomotion and a safe cutting mechanism.
- Develop teleoperative robot control as a verified baseline before autonomous navigation.
- Investigate and attempt autonomous navigation using the ROS2 Nav2 stack with SLAM Toolbox.
- Assess the performance of each subsystem and document limitations for future development.

1.3 Report Structure

This report is structured as follows. Chapter 2 presents a literature review of relevant earlier studies in robotic lawn mowers, solar energy systems, and LIDAR-based navigation. Chapter 3 describes the methodology, system architecture, hardware and software implementation. The results are presented and discussed in Chapter 4. Chapters 5 and 6 draw conclusions and propose directions for further development. Chapter 7 provides a project management review and quality management discussion. References and appendices are also included at the end.

2. Literature Review

2.1 Autonomous and Solar-Powered Grass Cutting Robots

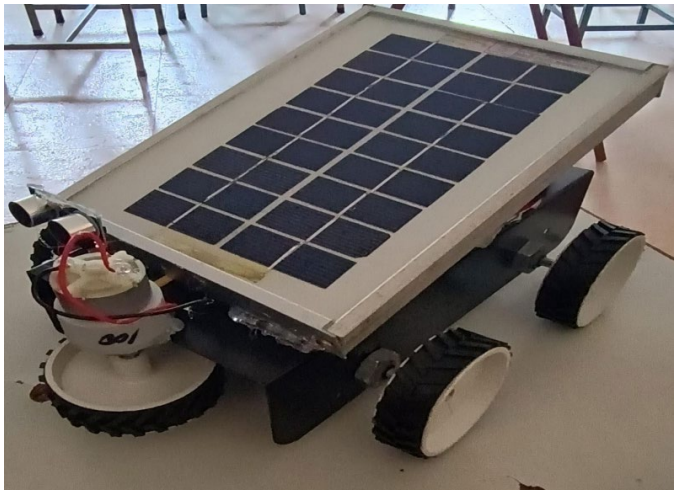

Figure 2 Chandra Sekar, P. et al. (2023) Solar Powered Grass Cutting Robot (Arduino)

Early research on solar-powered grass cutters mainly focused on a simple Arduino-based systems but it got limited intelligence. Chandra Sekar, P. et al. (2023) proposed a solar-powered grass cutting robot using an Arduino UNO with simple obstacle avoidance via ultrasonic sensors. Although the robot worked well in small areas, but it lacked of spatial awareness and could not map or plan paths. Similarly, Palve, S. et al (n.d.) used Arduino and ultrasonic sensors to build a solar-powered automated grass cutter. It demonstrated the feasibility of solar energy collecting for small robotic platforms.

Figure 3 CNET (2025) Lawn Mowers

Commercial robotic mowers such as those reviewed by CNET (2025) prove that wireless boundary navigation using satellite positioning and camera vision. It is technically feasible, although significantly more expensive. These products indicated the market demand but also highlighted the cost and complex challenge that academic prototypes aim to overcome.

Figure 4 Electrosal. (2022) Obstacle Avoidance & Pesticide Spreading Grass Cutting Robot

Electrosal. (2022) presented a solar-powered grass cutter with obstacle avoidance. It able to spread the pesticide also. It reminds that an automatic rain protection system should be implement on a not waterproof grass cutter robot. Although this project never implements this function, but it will continue in the future. Aleksandar Haber PhD (2024a,2024b) video demonstrates how to install and run lidar on Raspberry Pi and ROS. This provides valuable insight about wireless remote control and sensor integration approaches applicable to this project.

2.2 LIDAR-Based Navigation and SLAM

Simultaneous Localisation and Mapping (SLAM) is a fundamental capability for autonomous robots operating in unknown environments. The RPLidar A1M8 used in this project is a low cost 360-degree LIDAR sensor widely used in ROS-based platforms. Circuitdigect.com. (2025) documented an ESP32-based self-driving robot using ROS2 and LIDAR. It directly provides a relevant reference for the software stack. The SLAM Toolbox is available natively in ROS2. It provides online mapping and localisation capabilities compatible with 2D LIDAR sensors such as the A1M8.

Jessesstevens.com.au. (2025) demonstrated a complete ROS2 Jazzy Jalisco setup with SLAM Toolbox on Ubuntu 24.04 LTS for a Raspberry Pi 5. It actually closes to the configuration used in this project (Raspberry Pi 4B - ROS2 Kilted - Ubuntu Server 24.04). This reference confirmed the feasibility of the chosen software architecture and gave troubleshooting tips for LIDAR integration.

Originally, ROS2 Jazzy packages were chosen, but the official ROS2 documentation (docs.ros.org, Kilted) noticed that Kilted was the latest version of ROS2. Additionally, there were some problems when installing the ROS2 Jazzy packages. Installed the ROS2 Kilted packages after the ROS2 Jazzy packages removed. ROS2 Kilted was the primary reference for package installation, node configuration and the Nav2 navigation stack. Nav2 provides a comprehensive set of tools for path planning, obstacle avoidance, and recovery behaviours. It was the intended target for autonomous navigation in this project.

2.3 Motor Control and Hardware Integration

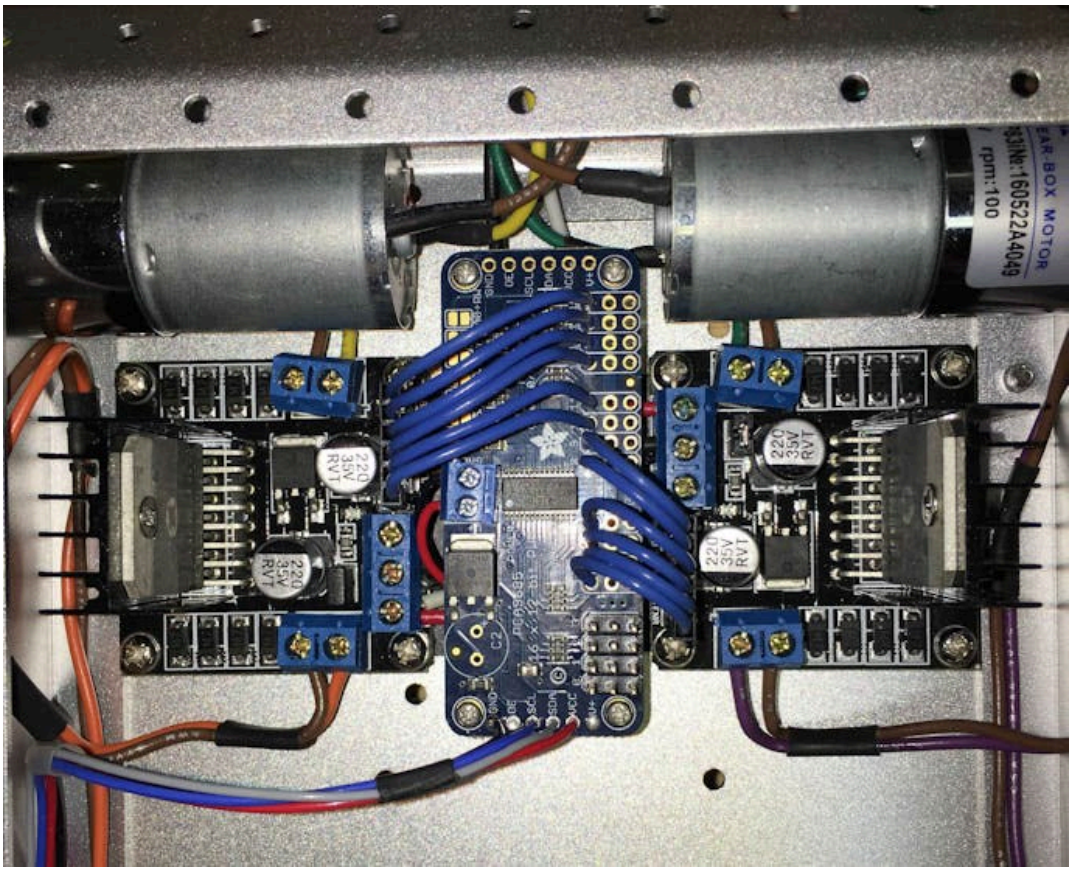

Figure 5 Hackster.io (2017) H-Bridge & Servo Shield Connection

The L298N dual H-bridge motor driver is a widely adopted solution for controlling DC motors from microcontrollers. The L298N DC…(n.d.) provided detailed documentation on L298N wiring and PWM speed control for Arduino. Hackster.io (2017) show a practical guide for 4-wheel-drive DC motor control on Raspberry Pi. It needs some specified components such as PCA9685 board. Therefore, this project never follows this method but is actually useful for 4WD robotics project.

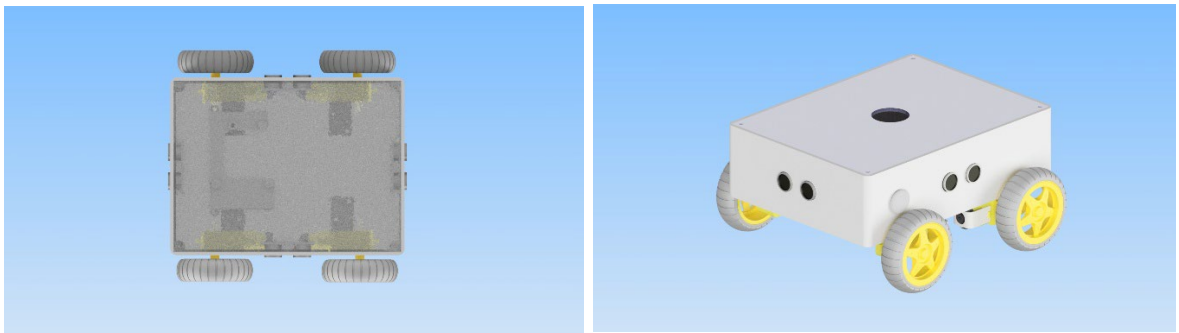

Figure 6 Cults3D (2024) 3D Printed Robot Chassis

The Arduino Project Hub. (2024) and Cults3D (2024) provided references for 3D-printed robot chassis design. Given the time constraints in this project, an existing online 3D chassis design was adopted rather than creating a custom one from scratch. To prioritize system integration over mechanical design. Even though the chassis design slightly too small for this project.

2.4 Solar Energy and Battery Management

Figure 7 Dexter Industries. (2024) 3D Printed Robot Chassis

Voltage State	Voltage Per Cell	Total 3S Pack Voltage	Status
Maximum (Peak)	4.2V	**12.6V**	Fully Charged (Charging Cutoff)
Nominal	3.7V	**11.1V**	Average Operating Voltage
Minimum (Cutoff)	~2.8V – 3.0V	**~8.4V – 9.0V**	Fully Discharged (BMS Cutoff)
Storage	3.8V – 3.85V	**11.4V – 11.55V**	Ideal for Long-Term Storage

Figure 8 kuruibms (2026) Per-Cell vs. Pack Voltage Comparison Table

The Dexter Industries. dSolar documentation (2015) and the Victron Energy MPPT solar charger manual. (n.d.) informed the power system design. A 3S3P 3.7V lithium-Ion battery configuration (nominally 11.1V, maximum 12.6V) was chosen to provide sufficient voltage for the motor drivers and the Raspberry Pi via a regulated 5V output. The kuruibms (2026) guide on 3S battery management confirmed the voltage thresholds used in the charging circuit. 12.6V at full charge and approximately 9V as the low-cutoff threshold. The LM2596 step-down voltage regulator was selected to provide a stable 5V rail for the Raspberry Pi and LIDAR from the battery output.

Solar panels in isolation were found to be insufficient for continuous robot operation. The 4W Dexter solar panel can only support up to 10.5V and 500 mA, depending on sunlight exposure. Small photovoltaic panel are more suitable for charging batteries during periods of inactivity rather than directly driving motors. Therefore, the design scheme decided to use the solar panels for battery recharging rather than as a real-time power source for the robot's movement.

2.5 Robotics Frameworks and Software Tools

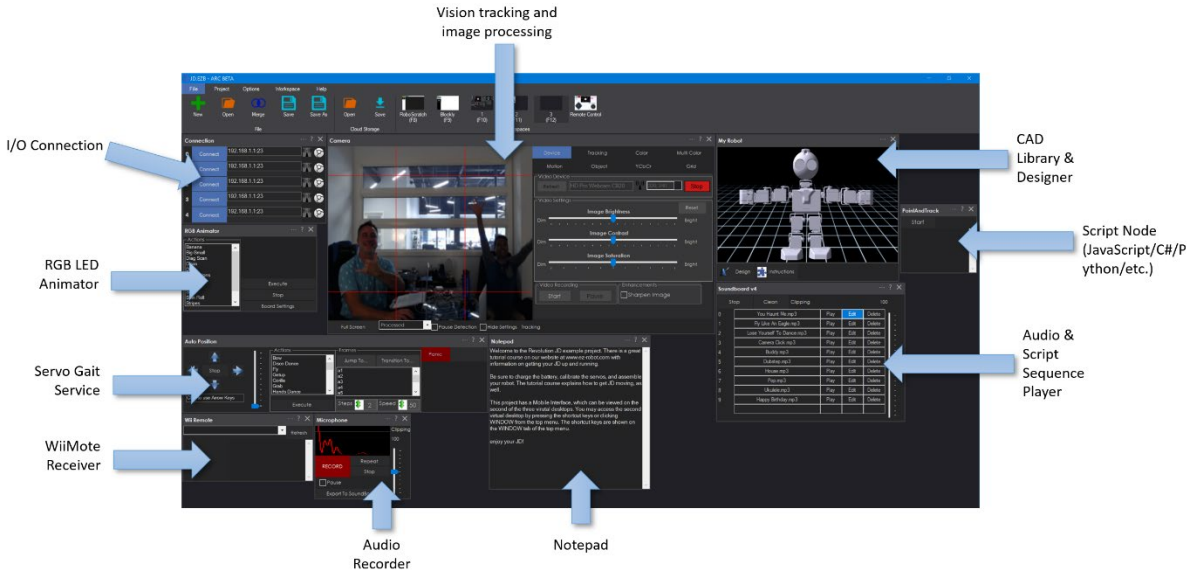

Figure 9 Synthiam (2023) ARC Project Example

ROS2 was selected as the primary robotics middleware due to its modular architecture, active community support and native compatibility with the RPLidar A1M8. Synthiam (2023) provided a broader overview of robot skill development methodologies, reinforcing the value of modular, component-based design. Here got some limitations such as required specified components. To learn how to use this software and configure those components need long time to figure out. Therefore, this project did not waste time on the software. It may bring even more advantages if using this software for DIY projects. Besides that, the Raspberry Pi official documentation only guided the camera module setup process for Raspberry Pi OS. Hence, the project failed to complete due to package dependency issues on the Ubuntu server.

3. Description of Project Work and Methodology

3.1 System Architecture Overview

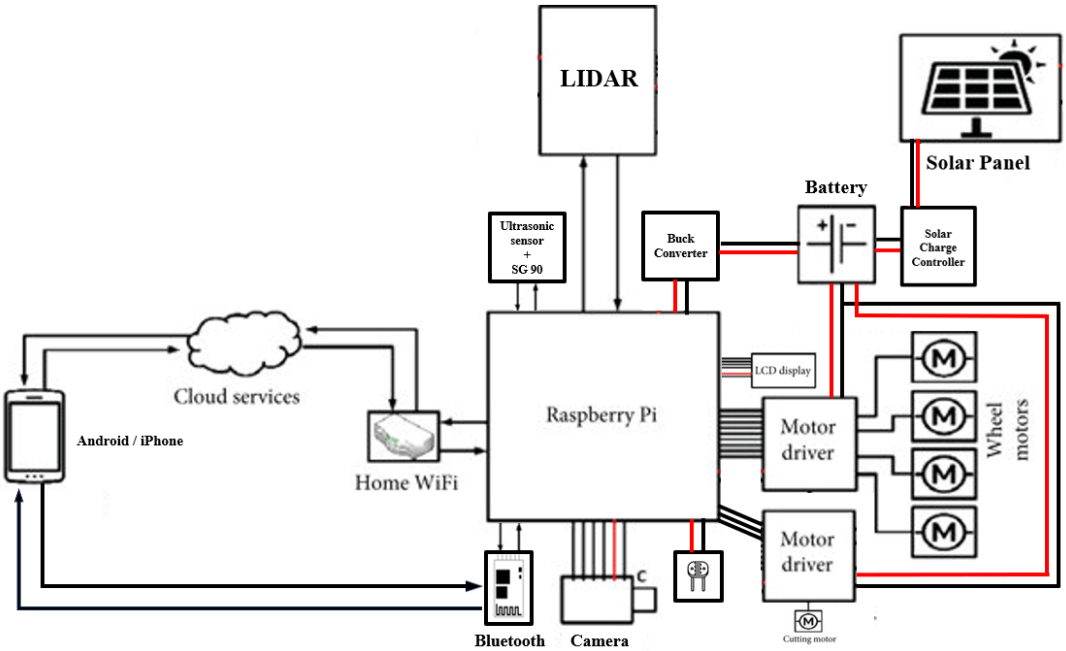

Figure 10 Ideal Block Diagram

The robot is organised into four main subsystems, which is power management, locomotion and cutting, sensing and perception, and computation and control. These all connected through a central controller board Raspberry Pi 4B. It runs ROS2 Kilted on top of Ubuntu Server 24.04 LTS with XFCE desktop environment.

Power flows from the solar panels to a PWM solar charge controller then flow into the BMS and LM2596 regulator to supply the Raspberry Pi and LIDAR. While the motor drivers are powered directly from the battery pack. The software stack runs on the Pi with the operator accessing it remotely via VNC from a laptop on the same local network or hotspot. ROS2 nodes handle sensor data processing and motor control, communicating through standard topics such as [/scan] and [/cmd_vel].

3.2 Hardware Implementation

3.2.1 Power System

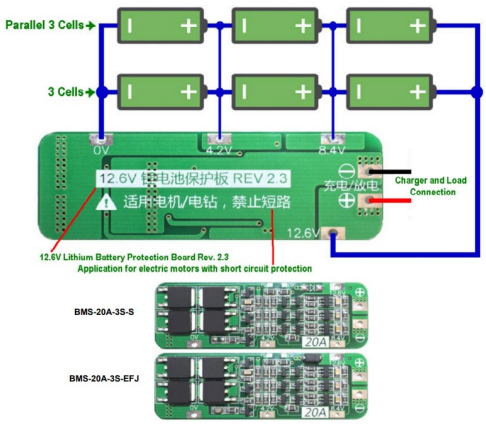

Figure 11 Model... (.n.d) BMS-20A-3S

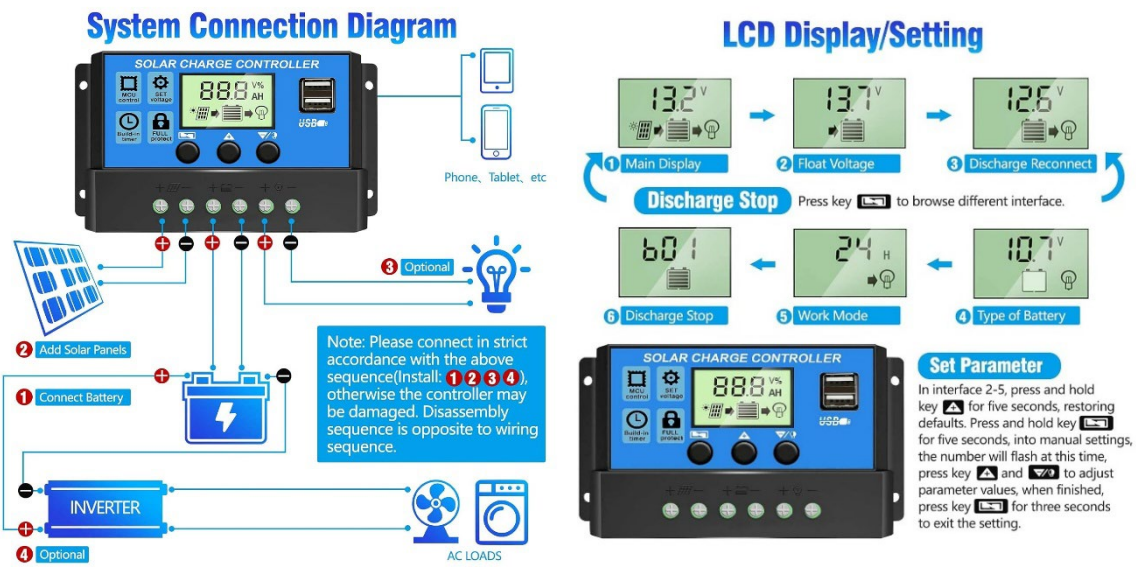

Figure 12 Amazon.in. (2026) 10A 12/24V PWM Solar Charge Controller User Manual

Figure 13 Robot PWM Solar Charge Controller Demo

Two Dexter solar panels were connected in series. Each panel produces roughly around 10.5V at 0.5A in good daylight conditions. So, the series configuration enables the combined open-circuit voltage to reach approximately 21V while maintain the same current rating. This power input goes to a PWM solar charge controller first and then to 12.6V 20A lithium battery protection board (BMS) to regulate the charge voltage into a 3S3P 18650 lithium-ion battery pack. The nominal voltage of the 3S3P arrangement is 11.1V with the total capacity is larger than a single 3S battery pack.

From the battery, an LM2596 step-down buck converter is set to output 5V. So, it can provide stable power to Raspberry Pi. And then through its USB-C port to supply the RPLidar via a USB cable. The two L298N motor drivers are powered directly from the battery terminals.

One thing was found during testing is that the two-panel array cannot supply enough current to run all the motors and the Raspberry Pi at the same time. Under load, the robot can draw more than the current that the panels can deliver. In practice, the solar

panels are used to charge the battery when the robot is stationary, not as a live power supply during movement. This is a known trade-off with small photovoltaic systems and is discussed further in Chapter 6.

Bought a 12.6V 5A lithium-ion battery charger to charge the robot for development and testing. Remember to set up the PWM solar charge controller first (B1=Lead Acid Battery, B2=Gel/Lithium Ion Battery, B3=Floated Battery). Always connects the battery to solar charge controller before connecting the solar panels to the solar charge controller. It allows the solar charge controller to detect the battery's voltage and it will adjust accordingly.

3.2.2 Locomotion Subsystem

Motor

Voltage	DC 3V	DC 5V	DC 6V
Current	100 MA	100 MA	120MA
Reduction rate	48:1		
RPM (With tire)	100	190	240
Tire Diameter	65mm		
Car Speed(M/minute	20	39	48
Motor Weight (g)	29		
Motor Size	70mm*22mm*18mm		
Noise	<65dB		

Figure 14 with, H. (2021) DC Motor Specifications

Four 5V yellow DC motors drive the robot in a 2WD arrangement. Two motors on each side share a L298N motor driver output. The L298N motor driver receives PWM signals from the Raspberry Pi's GPIO pins. Based on the motor controller code developed for this project, the left motor pair is driven through GPIO BCM pins 13 (IN1), 19 (IN2), and 26 (ENA). While the right motor pair uses pins 5 (IN3), 6 (IN4), and 0 (ENB). The PWM frequency is set to 1000 Hz for smooth speed control without audible motor noise.

The motor controller runs as a ROS2 node written in Python. It subscribes to the [/cmd_vel] topic and converts incoming messages into the corresponding GPIO states and PWM duty cycles. The differential drive logic calculates the robot's wheel separation and converts to linear and angular velocity commands into individual left and right motor speeds. A safety watchdog timer runs every 100 milliseconds. If no new velocity command is received within 1 second, the motors will automatically stop.

During initial teleop tests, the forward and reverse speed was noticeably too fast for safe indoor use but the turning speed was slow. These are purely software tuning issues. It can be solved without any hardware changes by adjusting the maximum linear velocity cap in the motor controller and the angular gain.

3.2.3 Cutting Mechanism

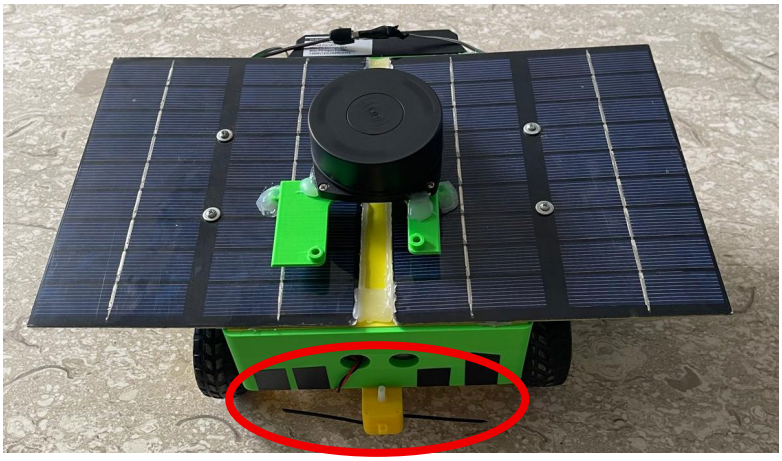

Figure 15 Robot Cutting Mechanism

The fifth 5V DC motor is used for the cutting function, driven by the second L298N. The cutting mechanism uses a cable-tie prototype design. Two zip-ties tie radially to the rotating yellow DC motor's shaft. This ensures safety for indoor and lab testing. Since the ties is flexible instead of cutting by blade. This cutting mechanism already connected, but it has not been tested operationally yet due to SLAM issue.

In the beginning, this project planned to integrate with a Pi camera module to identify obstacle with YOLO pre-trained model. So, the robot able to recognise grass and start the cutting mechanism. If pets or any other obstacles suddenly appeared and near to the robot, the cutting mechanism will stop to prevent injuries and accidents.

3.2.4 Sensing Subsystem

Key parameters

Recommended applications	Vacuum robot,Home robot
Measuring Range	0.15m - 12m
Sampling Frequency	8K
Rotational Speed	5.5Hz
Angular Resolution	≤1°
Dimensions	96.8 x 70.3 x 55mm
System Voltage	5V
System Current	100mA
Power Consumption	0.5W
Output	UART Serial (3.3 voltage level)
Temperature Range	0℃-40℃
Angular Range	360°
Range Resolution	≤1% of the range (≤12m) ≤2% of the range (12m~16m)
Accuracy	1% of the range (≤3 m) 2% of the range (3-5 m) 2.5% of the range (5-25m)

Item	Unit	Min	Typical	Max	Comments
Distance Range	Meter(m)	TBD	0.15-12	TBD	White objects
Angular Range	Degree	n/a	0-360	n/a	
Scan Field Flatness	Degree	-1.5		1.5	
Distance Resolution	mm	n/a	<0.5 <1% of the distance	n/a	<1.5 meters All distance range*
Angular Resolution	Degree	n/a	≤1	n/a	5.5Hz scan rate
Sample Duration	Millisecond(ms)	n/a	0.125	n/a	
Sample Frequency	Hz	n/a	≥8000	8010	
Scan Rate	Hz	1	5.5	10	Typical value is measured when RPLIDAR A1 takes 360 samples per scan

Figure 16 www.slamtec.com. (.n.d) RPLIDAR A1M8 Specification

The RPLidar A1M8 is the main sensor of this project. It is a 360-degree spinning LIDAR with a 12m range and around 1-degree angular resolution, scanning at approximately 5.5Hz. It connects to the Raspberry Pi over USB and is detected automatically via a custom udev rule that creates a stable [/dev/rplidar symlink] pointing to [/dev/ttyUSB0]. This avoids issues with the device node name changing on reboot.

ROS2 publishes the LIDAR data on the [/scan] topic using the sllidar_ros2 driver package. Live scan data was confirmed working in RVIZ2 running on the laptop over the network, with the full 360-degree point cloud displaying correctly. Scan frequency was verified at about 7.5 Hz.

Other sensors such as HC-SR04 ultrasonic sensor, Pi camera module 2 (NoIR), and LDR are present in the hardware. However, these sensors had not been integrated into the system by the submission deadline. The Pi camera cannot be used because the libcamera library required by the Pi Camera is only fully supported on Raspberry Pi OS. Ubuntu Server 24.04 does not include the necessary GPU firmware for the camera interface to function properly.

This project tried a lot of times to use other packages and capture image by using the Pi camera on Ubuntu Server OS. Ultimately, still unable to do it. The only one way to use the Pi camera is using another Raspberry Pi to download Raspberry Pi OS. And then download the libcamera library and let those two Raspberry Pi to communicate and changing data.

3.2.5 Chassis and Physical Assembly

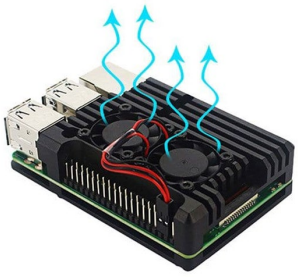

Figure 17 Kurosity. (2023) RPi 4/5 Aluminum Heatsink Case with Dual Fan

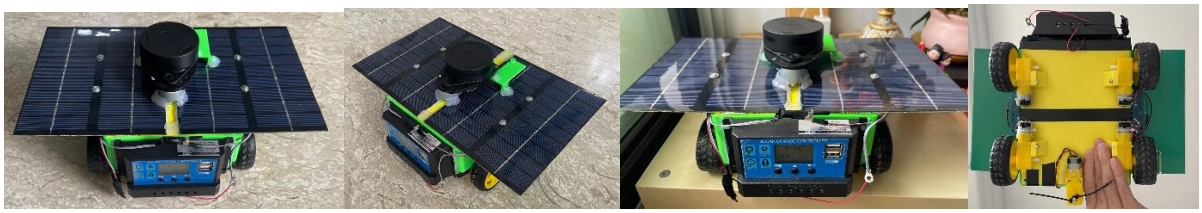

Figure 18 Robot Assembly with Chassis

The chassis is a 3D-printed design sourced from an existing online robot car model on Cults3D. The decision to use an existing design rather than creating a new one from scratch was a deliberate time-saving choice. Custom mechanical design would have taken weeks that were needed for software development. The chassis was printed on the school's 3D printer. The Raspberry Pi is placed in an aluminium case with dual cooling fans. It actually helpful to cool down the Raspberry Pi for long periods of use. Another reason to implement the cooling fans is that the Raspberry Pi operates in a small chassis and it exposed to sunlight.

3.2.6 Uninstalled Parts

Some components that not yet install to the robot such as LCD display, HC-05 Bluetooth, HC-SR04 ultrasonic sensor + SG90, Pi camera module 2, and LDR. These components planned to integrate to the robot but due to insufficient time, so unable to complete on time. Only Pi camera tested but not working with the Ubuntu Server OS.

Combine the HC-SR04 ultrasonic sensor with SG90 actually planned as a second obstacle avoidance sensor in case the Lidar not working in real world. LDR used to detect the strong sunlight area and charge when robot's battery is low.

HC-05 Bluetooth allows user to control remotely the robot using handphone. It can also be used to change the robot's setting with customize handphone software. Even though this haven't completed. The LCD display to indicate the robot's status and info. These plans would be carried out in order to finish all the work.

3.3 Software Flowchart

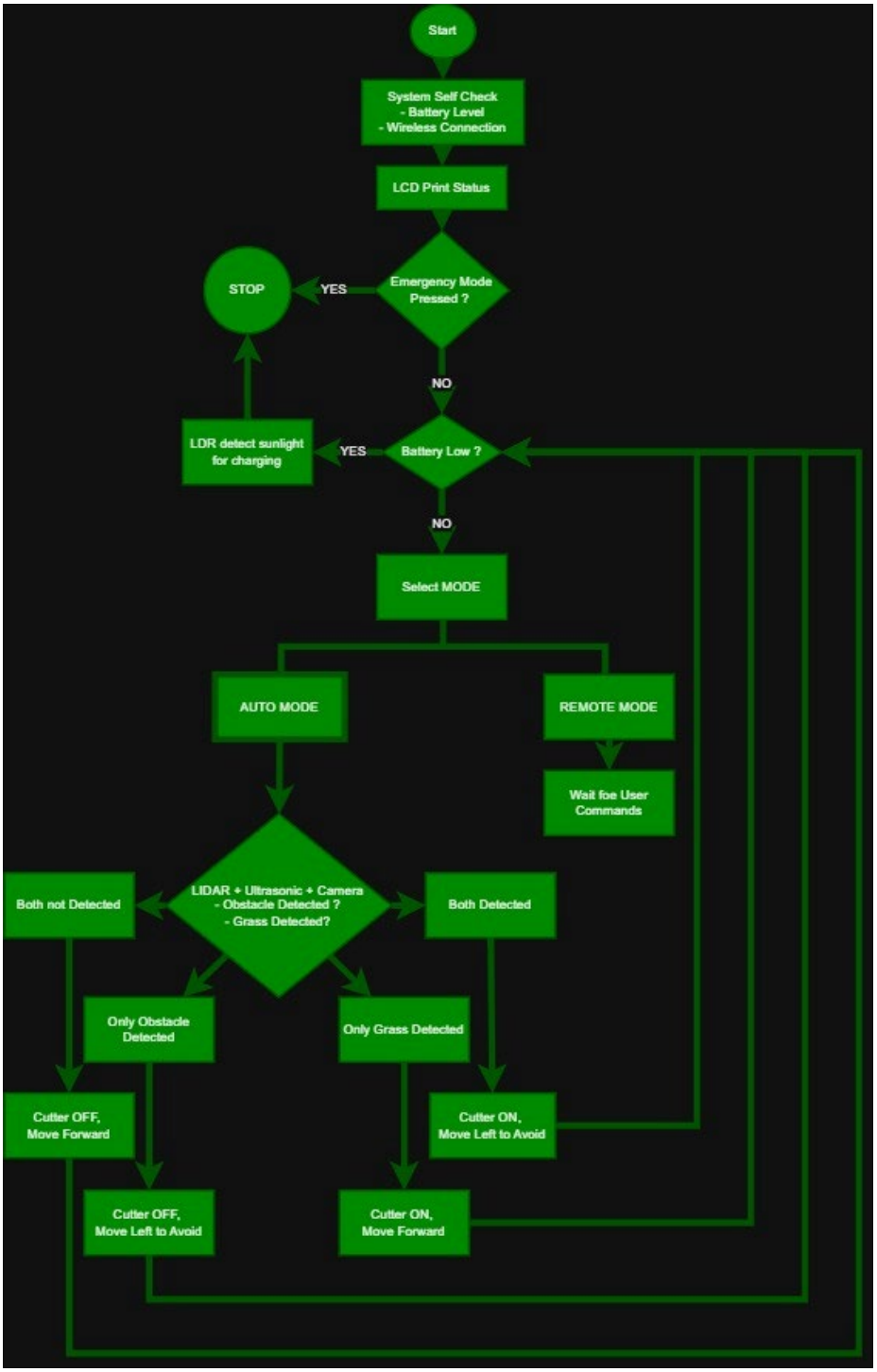

Figure 19 Ideal System Flowchart

Figure 17 shown the ideal system flowchart even though it uncompleted within the timeline. It planned to make the robot to do a quick check (battery level, wireless connection) when startup. And the LCD print the robot status on the LCD display. A professional robot should also implement an emergency button to prevent any abnormal activities and unnecessary injuries. The LDR lets the robot to detect sunlight and charging. A customized handphone software created to allow user to select mode and change the setting. If auto mode is chosen, robot will start autonomous navigation with using the Lidar and ultrasonic sensor. A camera used to detect the grass and pets and swtich on and off the cutting mechanism. If remote mode is selected, robot will wait for the user to use the UI button to remote control the robot movement.

3.4 Software Implementation

3.4.1 Operating System and Desktop Environment

Ubuntu Server 24.04.3 LTS was flashed to a 256GB microSD card and a 32 GB microSD card. It used the Raspberry Pi Imager to setup the Wi-Fi, SSH, and a hostname pre-configured before first boot. It is very important to setup completely with Raspberry Pi Imager. Then the Raspberry Pi connect automatically to the specified Wi-Fi or hotspot. Download a Putty software or use computer's Powershell to SSH and check for the IP address without an extra monitor. After logging into the Pi, can start to download those packages that necessary.

Since RVIZ2 requires a graphical display, the XFCE lightweight desktop environment was installed with a TigerVNC server. This setup allows the Pi's full desktop including RVIZ2 and terminal windows to be accessed from a laptop over the local network at 1920x1080 resolution. VNC runs as a systemd service that boots up automatically. The approach of running VNC on the Pi rather than relying on X11 forwarding turned out to be more stable and much faster for real-time visualisation actions like watching the LIDAR scan.

After the SD card failure without any issues in February 2026, the entire setup had to be rebuilt from scratch. To avoid this unlucky thing happening again, should record down all the codes in GitHub or get an extra SD card to copy and paste the Pi's files for backup. A (setup_lidar.txt) file created to record all the steps to setup everything from scratch. Besides that, a shell script (setup_robot_complete.sh) was written to automatically create all robot configuration files. It included the motor controller node, SLAM parameters, launch files, and RViz configuration into an organised [~/robot/] directory. The script can restore the full software environment in a single run after a fresh OS install. Reduces the recovery time if the SD card fails again.

3.4.2 ROS2 Installation and Package Setup

ROS2 Kilted was installed using the official Debian package method on docs.ros.org website. Added the ROS2 apt repository and installed the ros-kilted-desktop. The full desktop package was chosen over the base install because it has RVIZ2 without a separate installation step needed. In addition, the following packages were installed (ros-kilted-navigation2, ros-kilted-nav2-bringup, ros-kilted-slam-toolbox, ros-kilted-teleop-twist-keyboard, ros-kilted-rviz2, ros-kilted-tf2-tools, and ros-kilted-tf-transformations). The sllidar_ros2 driver was built from source in a dedicated [~/ws_lidar/ colcon] workspace.

All workspace source commands were added to [~/.bashrc] so that every new terminal session will automatically configure with the correct ROS2 environment.

3.4.3 LIDAR Integration and Coordinate Frames

Getting SLAM Toolbox to produce a working map required to solve a coordinate frame (TF) problem first. SLAM Toolbox needs a complete TF chain from map to base_link to laser]. Without a wheel encoder, there is no real odometry. A static transform publisher was used to provide a fixed odom to base_link transform and a second static publisher provides the base_link to laser transform with the LIDAR positioned 10 cm above the robot's base. This creates the required [map → odom → base_link →laser] chain.

The SLAM Toolbox was configured using a custom parameter file that sets [minimum_travel_distance] and [minimum_travel_heading] both to 0.0. This is necessary if without a real encoder odometry. The toolbox cannot detect physical movement. Otherwise, it would refuse to update the map. Setting these values to zero to force map updates entirely based on time intervals (every 5 seconds) rather than on detected movement. The map resolution is 0.05 m per cell. It gives adequate detail for a residential garden environment.

3.4.4 SLAM Mapping and Map Saving

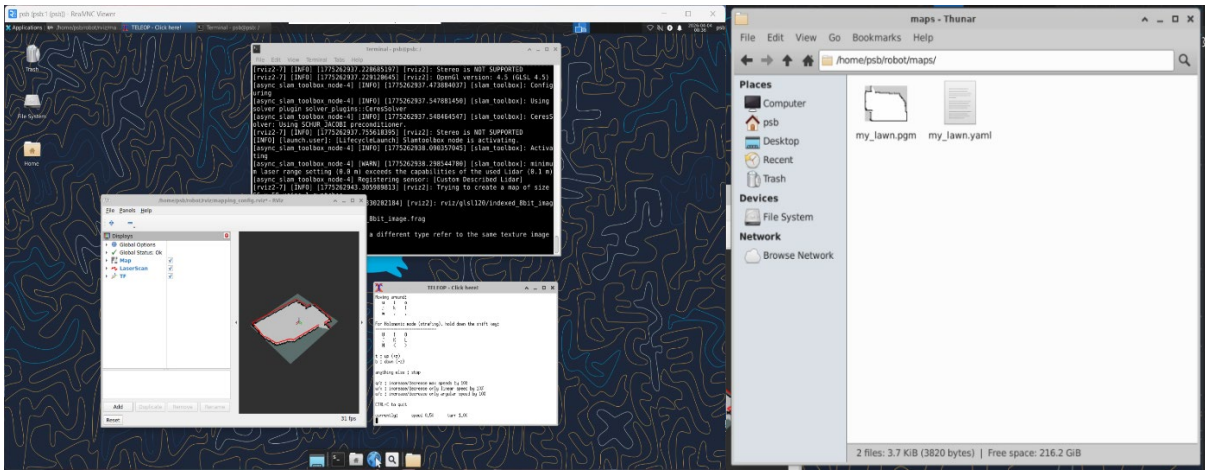

Figure 20 Teleop & Mapping & Save Map

After correctly configuring the TF tree and SLAM parameters, the mapping workflow runs as follows. The [robot_map] command launches the LIDAR driver, static transform publishers, SLAM Toolbox in online mapping mode, and RVIZ2 simultaneously. It also opens the Xterm window for teleop. Just select the window, and press the specified button to start mapping. Else runs [robot_teleop] command in second terminal to open the keyboard teleop interface. Adjusts the robot speed and drives the robot around the area to builds up the occupancy grid map in RVIZ2 in real time.

Once a satisfactory map has been captured, [robot_save_map <mapname>] calls the ROS2 [map_saver_cli] tool to write the map to [~/robot/maps/] as both a PGM image and a YAML metadata file. The process has been tested successfully, and the map has been saved correctly. The saved map files will be used as the input for the autonomous navigation.

3.4.5 Navigation Stack Configuration and Current Status

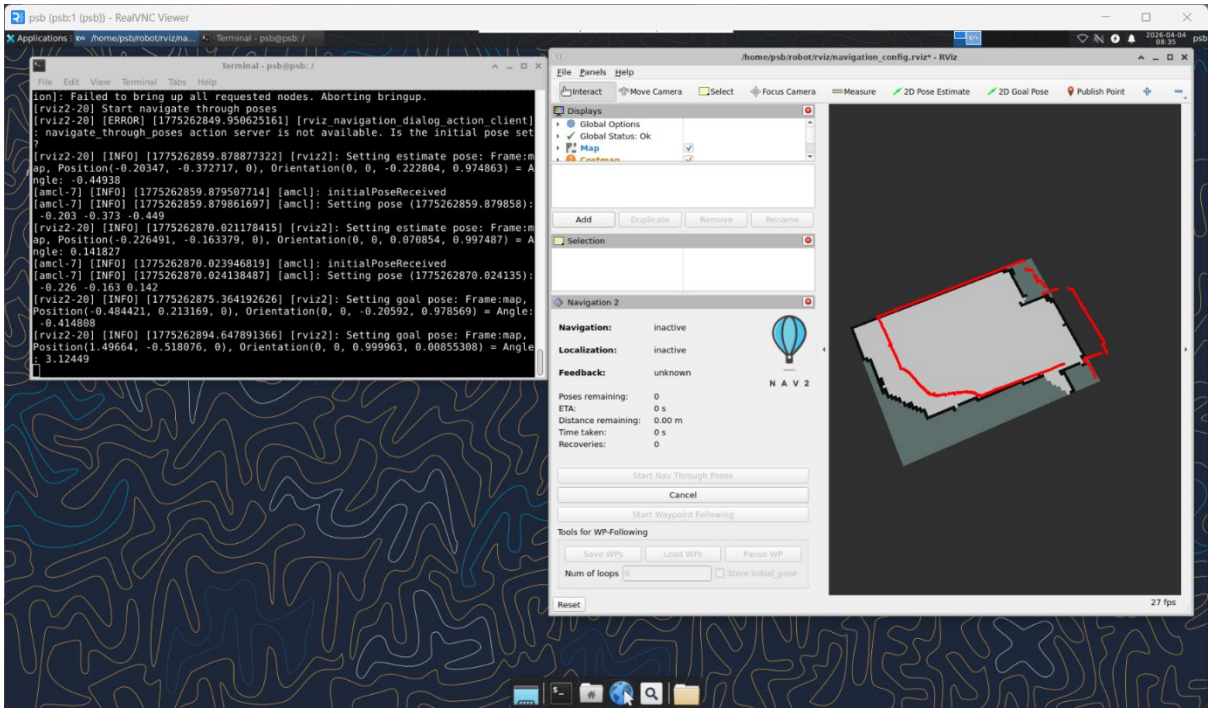

Figure 21 Uncompleted Autonomous Navigation (RVIZ & Output)

The Nav2 navigation stack such as AMCL localiser, DWB local planner, and the BT navigator was configured and tested. The [robot_navigate <mapname>] command launch the full navigation stack with the saved map. AMCL is used for localisation within the known map, operating in differential drive mode with a count of 500 to 2000 particles. The DWB local planner is configured with a maximum forward velocity of 0.4m/s and maximum angular velocity of 1.0rad/s. Conservative acceleration limits suited to the robot's weight and motor capability.

As of the time of writing, the navigation stack has launched correctly and the map has been loaded into Nav2. The main remaining challenge is reliable initial pose estimation. The robot needs to have a valid 2D Pose Estimate to be set in RVIZ2 before AMCL can begin tracking. Without encoder odometry, the odom frame would drift immediately. Limiting the AMCL's ability to maintain localisation during movement. This project will continue to implement a proper odometry source. Either through wheel encoders or using the Lidar-based odometry from SLAM Toolbox. It is considered as the critical next step for achieving autonomous navigation.

4. Discussion and Results

4.1 Summary of Results

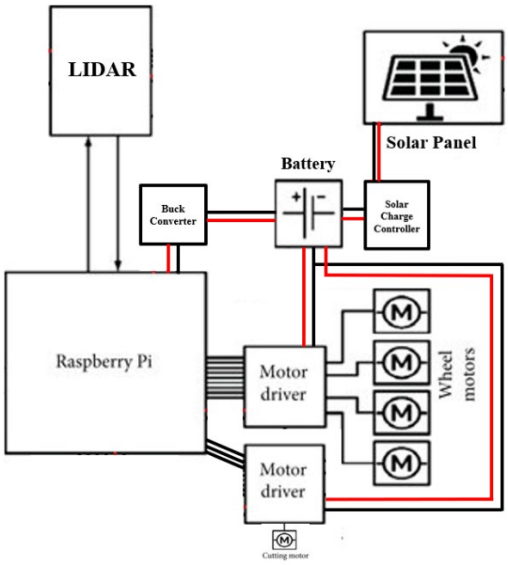

Figure 22 Achieved System Block Diagram

Objective	Planned Outcome	Achieved?	Notes
Sustainable solar charging power system	Charge battery from solar panels	Partial	PWM Solar Charge Controller, BMS and LM2596 confirmed functional and tested. Insufficient solar power for simultaneous operation due to solar panel output. A Lithium-Ion Battery Charger needed.
LIDAR integration with ROS2	Real-time scan data in RVIZ2	Yes	RPLidar A1M8 successfully publishing /scan topic, verified in RVIZ
SLAM mapping	Save a complete indoor map	Yes	Map successfully saved in Pi's directory
2WD teleoperation	Robot moves in all directions	Yes	Teleop functional, speed tuning required to modify again
Cutting mechanism	Cutting motor activates on command	Partial	Wiring done, but haven't write the code to move and test
Camera integration	Live video feed in ROS2	No	Package incompatibility on Ubuntu Server
Autonomous navigation (Nav2)	Nav2-based self-navigation	No	Don't have a real odometry, still working on it
3D chassis assembly	Design grass cutting robot	Yes	Printed and assembled

Table 1 Results Summary

Figure 17 shown the current block diagram that achieved in this project. A wiring diagram also displays the complete electrical connections between all hardware components. All connections were implemented and verified. Black arrows indicate the components planned for integration but not completed within the project timeline. Only the Lidar is integrated to the robot system with USB to Micro cable. Table 1 summarises the completion status of each project objective against the planned outcome. More details were explained as below.

4.2 Power System Analysis

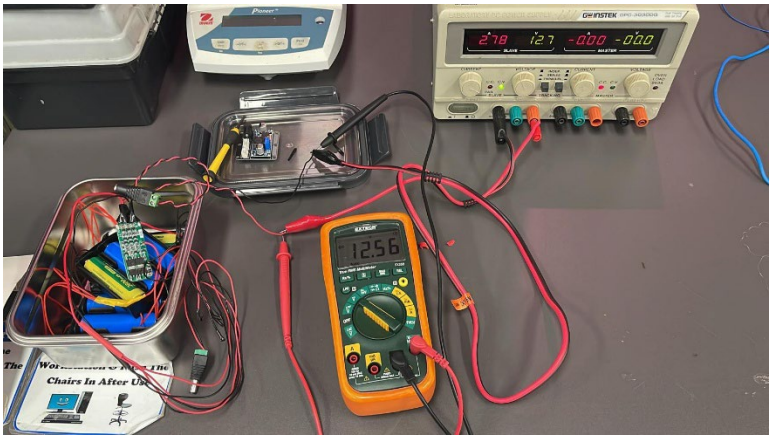

Figure 23 Charge Battery with Bench Stop

The solar charging circuit was verified using a multimeter. Under strong sunlight condition, two Dexter solar panels connected in series can generate an open-circuit voltage of approximately 21V. The PWM solar charge controller converts the solar energy to charge the 3S3P battery pack. An implemented BMS protection board prevent the battery pack from overcharging. LM2596 provides a stable 5V output. The Raspberry Pi and LIDAR sensor operate normally on this power supply.

However, continuous operation of all four locomotion motors and the onboard computer exceeded the available solar panel output current. Each L298N motor driver draws up to 2A per channel under load. With all five motors, peak current demand significantly exceeds the 0.5A panel output. Therefore, the battery pack acts as the primary energy buffer with the solar panels supplementing charge during low usage periods. For sustainable long-duration operation, a higher-wattage solar array would be required.

4.3 Locomotion and Teleop Results

The 2WD teleop system functioned normally, proving that the ROS2 software stack, GPIO interface, L298N motor driver, and DC motors are properly integrated. The robot responds to keyboard commands with corresponding directional movements. No control latency from keypress to motor response.

The main performance issue identified was speed imbalance. Forward and reverse speeds were too fast for safe testing. The turning radius was too large and too small. This is a both hardware and software issue. Sometimes, the robot's wheels will touch the robot body because it is not a customize chassis. Adjusting the PWM duty cycle mapping in the motor control node is needed. This is a straightforward solution recommended for immediate implementation in future work.

4.4 LIDAR and SLAM Attempts

The RPLidar A1M8 was confirmed to operate correctly within the ROS2 ecosystem. The [/scan] topic published valid laser scan data that was visualised in RVIZ2. It can display a clear 2D representation of the surrounding environment. This proved the hardware and driver compatibility with the chosen ROS2 distribution.

The SLAM Toolbox was installed and configured. After resolving the coordinate frame (TF) chain by adding static transform publishers for the [odom→base_link] and [base_link→laser] relationships. Then set up the [minimum_travel_distance] and [minimum_travel_heading] both to 0.0 in a custom SLAM parameter file. Full 360-degree occupancy grid maps were generated in real time and visualised correctly in RVIZ2. Maps were saved using [map_saver_cli]. Generated a .pgm and a .yaml output files in [~/robot/maps/] directory. This is a key achievement of this project. The remaining challenge is autonomous navigation, which requires a reliable odometry source for AMCL localisation.

4.5 Limitations and Critical Evaluation

The most significant limitation of this project is the non-achievement of autonomous navigation, which was the primary objective. This can be attributed to three main factors. The SD card failure and associated data loss. Second factor is the complexity of the ROS2 SLAM and Nav2 configuration pipeline. Another factor is the initial underestimation of the time required to set up and troubleshoot the software stack on a headless Ubuntu Server installation.

Even though Ubuntu Server must be chosen instead of Raspberry Pi OS for compatibility with ROS2 Kilted. This brought an additional complexity especially the inability to use the Pi camera module. A dual-boot or Raspberry Pi OS-based ROS2 installation that using the unofficial but community-supported builds may have been more suitable for this project scope.

The 3D-printed chassis that sourced from an existing online design. It was functional but not perfectly matched to the component layout. Cable management, sensors and components placement were limited by the chassis geometry. As this 3D-printed chassis design was not designed for this specific configuration of sensors and power components.

5. Conclusions

This project aims to design and develop an AI autonomous solar-powered grass cutting robot with using affordable and publicly available components. Although autonomous navigation was not achieved within the project timeline. But this project still achieved significant improvement in hardware integration, software architecture, and subsystem verification.

The key achievements of this project included a functional DIY solar charging circuit verified via multimeter testing. LIDAR can successfully scan the real time environment with real-time visualisation in RVIZ2. A working 2WD teleoperative control system to control the robot movement via ROS2. A full physical robot prototype contains a 3D-printed chassis, motor drivers and onboard computing.

The main weakness of this project is the autonomous navigation function was not completed. SLAM mapping was successfully achieved. The robot can build and save the real time environment maps. But the transition to Nav2-based self-navigation requires a reliable odometry source that was not implemented within the project timeline. This was compounded by the SD card failure in February 2026 and caused all the software data loss. It wasted approximately two weeks of development time. This highlights the importance of treating microSD card failure as a common risk in embedded systems projects. Develop the practice of keeping backups from the start automatically.

In conclusion, this project demonstrates the technical feasibility of the proposed architecture. Combined the renewable solar energy systems with autonomous robotics platforms. Even though the autonomous navigation was not achieved but other subsystem performed as expected during independent testing. The integration challenges encountered are fully understandable and solvable with more time and resources. Gain valuable insights from the encountered challenges especially in areas of power management, SLAM and software reliability. This project builds a strong foundation for people that feeling interested in this field to develop in future.

6. Further Development

6.1 Autonomous Navigation & Energy System Optimisation

The following improvements are recommended for continued development of this project. The first priority is to use the generated environment map using and configure the Nav2 stack for autonomous path planning and obstacle avoidance. This is the most critical outstanding objective. Secondly, upgrade the solar power system to a higher-wattage solar panel array to maximize energy harvesting efficiency and ensure continuous operation without battery depletion.

6.2 Computer Vision & Intelligent Obstacle Detection

Switch to a USB webcam with compatible Ubuntu OS to enable computer vision for grass detection and obstacle recognition. Once a camera feed is available, train and deploy a YOLOv8 object detection model for grass and non-grass classification. When there is no grass, it automatically cut off the motor cutter power and save more energy. Same time, implement with dynamic obstacle detection such as people, pets and garden furniture. Perform software integration of the cutting motor with a safe activation and deactivation sequence triggered by the camera. This help to prevent the cutter to hurt anyone or anything.

6.3 Mechanical Design & Environmental Protection

Design a customize robot chassis using CAD software such as Fushion 3D that optimally accommodates all components to improve cable management and prevent the wheels touching the robot body. Implement cooling system to the robot to cool down the robot when operating for long periods of time under then sun. Besides that, provide weatherproofing for outdoor operation and integrate with a rain sensor to suspend operation during wet conditions.

6.4 Motion Control & User Interface Development

Remember to adjust the linear velocity PWM duty cycles and increase angular velocity parameters to achieve safe and controllable movements at all speeds. Design a mobile application that supported in iPhone and Android device. Users can remote control and status monitoring with handphone. An emergency stop button is essential for everyone safety.

6.5 System Reliability & Data Management

An automated SD card image backup protocol that can sync to a network share weekly to prevent total data loss from hardware failure. It will improve the system reliability.

7. Project Management and Quality Management Review

7.1 Project Management Review

7.1.1 Gantt Chart Comparison

The project ran for approximately 30 weeks, from 15 September 2025 to 9 April 2026. The original Gantt chart divided the work into the following phases. Project understanding and research (Weeks 1–8), component procurement (Weeks 9–10), hardware testing (Weeks 11–16, including a holiday break), continue hardware testing and sensors integration (Weeks 17–20), charging detection and wireless (Weeks 21–22), chassis design (Weeks 23–24), final adjustment (Weeks 25–26), report writing (Weeks 27–28) and double checking (Weeks 29–30).

The updated Gantt chart shows several significant differences when compared to the original. The most significant is that the original plan had no dedicated SLAM Development phase at all. The initial assumption was that navigation would naturally be integrated within the sensors integration window. In reality, SLAM configuration, map building, and navigation attempts required to extend from Week 21 to Week 29 (2 February to 26 March 2026). This was the biggest structural difference between the two charts.

Within the SLAM development phase, an SD card failure occurred around 10 February 2026 and consumed approximately two weeks of rebuild time (Weeks 22–24). This was not accounted for in the original plan. Despite this setback, SLAM mapping was completed successfully. The robot built and saved occupancy grid maps using the [map_saver_cli] tool to confirm it save in the [~/robot/maps/ directory]. Autonomous navigation remained incomplete, as it still requires a proper odometry source.

Other differences is the LCD Display connection was originally planned within continue hardware testing but was not completed in the updated chart. The Pi camera was attempted but only partially progressed due to Ubuntu Server package incompatibility. And also, the charging detection and wireless phase (LDR and Bluetooth) was carried over but never completed. The Chassis Design phase had a slightly later start in the updated chart 23 February instead of 16 February, but the same end date of 1 March). Final adjustment extended from the original 15 March to 24 March. Report writing shifted from the original window of 16–29 March to 25–31 March, ending earlier but starting later.

The activities that proved most critical to the overall project were the early ROS2 software environment setup. Everything else depended on this being stable. The component borrowing phase in November, which determined what hardware was available. The power system integration, which had to work before any mobile testing could happen. Looking at the original estimates honestly, they were too optimistic. There was no buffer time built in for unexpected failures, and the SLAM configuration was far more complex than anticipated for a platform without wheel encoders running on a headless server.

7.1.2 Key Changes to the Project Plan

The key change was adding a dedicated SLAM development phase that did not exist in the original plan. The original assumed SLAM would be handled within sensors

integration. But when getting the coordinate frame (TF) chain correct, configuring custom SLAM parameters, and debugging ROS2 package issues on Ubuntu Server. All took much longer times than expected. This phase had to run from early February to late March, overlapping with chassis work and final adjustments.

The SD card failure in February 2026 was the biggest unplanned event. It required purchasing a new SD card, reflashing Ubuntu Server, reinstalling all ROS2 Kilted packages and the sllidar_ros2 workspace, and reconfiguring the LIDAR udev rules and VNC server. This took about two weeks and had a cascading impact. Autonomous navigation depended on a completed SLAM map, was pushed beyond the project deadline as a result. To recover from this and prevent it happening again, a setup automation script (setup_robot_complete.sh) was written to restore the full software environment in a single run.

A secondary change was the decision to use an existing 3D chassis design from Cults3D instead of designing a custom one. This saved time for software development but meant the chassis was not perfectly suited to the component layout. It caused some cable management and wheel clearance issues. For the scope of this project, it was the right call.

The impact of these changes on the overall plan was mainly that autonomous navigation. The primary objective could not be demonstrated within the timeline. Everything up to and including SLAM mapping was achieved, but the final step of Nav2-based self-navigation remains as future work.

7.1.3 Strengths and Weaknesses of Project Management

One of the main strengths was setting up a structured Gantt chart from the beginning, it gave a clear roadmap even when things changed. Getting the component borrowing organised early in November also avoided delays later. The decision to establish teleop as a working baseline before attempting autonomous navigation was a good call. It confirmed the full hardware and software pipeline was functional before adding complexity.

The most obvious weakness was having no backup plan for hardware failure. SD cards are a known weak point in Raspberry Pi systems, but no backup images were maintained. This resulted in total data loss at a critical point. Another weakness was underestimating the SLAM configuration phase. The initial estimate assumed three weeks, but the actual work took closer to eight weeks when accounting for the SD card rebuild, TF frame debugging, and custom parameter tuning.

On reflection, I was reasonably good at keeping the hardware side on track but less effective at managing software complexity. If starting again, I would set up automated weekly SD card backups from day one. Add explicit buffer weeks to any software-heavy phase and treat ROS2 configuration time as at least double what seems reasonable.

7.1.4 Time Management Improvements

If starting this project again, the first thing I would do is spend time on software environment setup such as flashing the OS, installing ROS2 and testing the LIDAR driver before touching any hardware wiring. This would surface OS and package compatibility issues while there is still time to deal with them without impacting the rest of the project.

I would also allocate at least six to eight weeks for the SLAM and navigation phase instead of assuming it can be squeezed into a few weeks. Getting SLAM Toolbox working on a headless Ubuntu Server without wheel encoders. Then configuring Nav2 on top of that is a very complex work.

Keeping detailed logs of each working milestone can also be helpful. There were several points where things worked but were not documented, which made it harder to write about specific results later. Finally, using Git from day one for all source code, combined with automated SD card imaging. Hardware failure never again and cause weeks of work to go to waste.

7.2 Quality Management and Continuous Improvement

7.2.1 Role of Standards and Regulations

Standards and regulations play a fundamentally different role in engineering practice. Standards are are voluntary technical documents produced by organisations such as (International Organisation for Standardisation), IEC (International Electrotechnical Commission), and BSI (British Standards Institution). They define best practice for design, safety and performance. In contrast, regulations are legally binding requirements issued by the governments or regulatory authorities, and non-compliance carries legal consequences.

For a robotic lawn mower, several standards and regulations are relevant. The IEC 62061 standard on safety of machinery and its functional safety requirements is applicable to the cutting mechanism and emergency stop design. ISO 13849 addresses safety-related parts of machine control circuits, relevant to the motor driver wiring. In the European market, the primary regulation governing the design and market placement of powered machinery including robotic mowers. In Singapore, the Consumer Protection (Safety Requirements) Regulations and the relevant standards enforced by the Singapore Standards Council (SSC) would apply to any commercial product.

For the solar power system, the IEC 62109 covers the safety of power converters used in photovoltaic energy systems, relevant to the MPPT charge controller and BMS. Battery safety is governed by IEC 62133 for portable sealed rechargeable cells and batteries. Especially relevant to the 18650 lithium-ion cells used in this project.

7.2.2 Advantages and Disadvantages of Quality Standards

Adopting quality standards brings several key advantages. Risk reduction is the most useful. Standards encode decades of accumulated engineering knowledge, so following them means not having to search known failure modes from scratch. For example, IEC 62133 for battery pack design means the cell balancing and protection requirements are already defined and tested, reducing the risk of thermal runaway.

However, there are some disadvantages to standards adoption. Standards can be expensive to purchase and implement. To achieve certification requires significant testing and documentation overhead, which is not cost-effective for a prototype or academic project. Standards can also lag behind innovation. For instance, ROS2 and modern LIDAR-based navigation systems are not yet fully covered by existing robotics safety standards. These standards mainly written for industrial manipulators rather than autonomous mobile platforms.

Overall, the advantages of standards adoption outweigh the disadvantages for any commercially-intended product. The benefits of safety and quality assurance, combined with market access requirements, make standards compliance a necessity for serious commercial development. For this academic prototype, standards provide a valuable framework for identifying safety risks and design improvements, even where formal certification is not required.

7.2.3 Areas for Improvement and Quality Considerations

Referencing the project logbook, several areas for quality improvement were identified throughout the project. The first is battery safety. The 18650 lithium-ion cells used in the 3S3P configuration require proper cell balancing and overcharge or overdischarge protection. The BMS board provides basic protection, but no active cell balancing is implemented. According to the IEC 62133, active balancing is recommended for packs exceeding three cells in series, which this project's configuration meets.

The second area is cutting blade safety. Although the zip-tie prototype blade is a design compromise for safety during development. But it may have a different set of potential risks. The ties can detach at high RPM and become projectiles. Any operational prototype should have a blade guard that meeting the Machinery Directive and ISO 11684 (graphical symbols for machinery safety).

The third aspect is data integrity and software quality. As evidenced by the SD card failure, the project had no data backup or version control strategy. Implementing Git version control for all source code and automated SD card imaging would directly address this weakness. For a commercial product, formal software verification and validation processes based on IEC 61508 would be required for safety critical control functions.

Lastly, the outdoor operation environment raises weather-proofing and electromagnetic compatibility (EMC) concerns. The current casing does not provide moisture protection. IEC 60529 defines the appropriate ingress protection level for outdoor electrical equipment. A residential lawn mower should have at least minimum IP44. IEC 61000 (EMC compliance) would also need to be addressed to prevent interference between the LIDAR, motor controllers, and wireless communication modules.

REFERENCES

1. 14:00-17:00 (2015). *ISO 13849-1:2015*. [online] ISO. Available at: https://www.iso.org/standard/69883.html [Accessed 20 Sep. 2025].
2. Agc.gov.sg. (2026). *Consumer Protection (Safety Requirements) Regulations - Singapore Statutes Online*. [online] Available at: https://sso.agc.gov.sg/SL/CPTDSRA1975-RG1?DocDate=20250630 [Accessed 20 Jan. 2026].
3. Aleksandar Haber PhD (2024a). *Install and Run Lidar in Raspberry Pi 5 and ROS2 Jazzy Linux Ubuntu - Robotics and Control Tutorial*. [online] YouTube. Available at: https://www.youtube.com/watch?v=OSoMSVry-8E [Accessed 20 Sep. 2025].
4. Aleksandar Haber PhD (2024b). *Install and Run Lidar In ROS2, Ubuntu, and Raspberry Pi - Complete Tutorial*. [online] YouTube. Available at: https://www.youtube.com/watch?v=ao13F-L_TAI [Accessed 20 Sep. 2025].
5. Aleksandar Haber PhD (2024c). *Install and Run Lidar on Raspberry Pi and ROS - Linux Ubuntu Mate Solution*. [online] YouTube. Available at: https://www.youtube.com/watch?v=WVyJjxAyGJc [Accessed 20 Sep. 2025].
6. Amazon.in. (2026). *ELEPHANTBOAT ® 10A 12V 24V ABS Solar Panel Charger Controller Battery Dual USB LCD Display Regulator (Blue) : Amazon.in: Garden & Outdoors*. [online] Available at: https://www.amazon.in/ELEPHANTBOAT%C2%AE-Charger-Controller-Battery-Regulator/dp/B07WGBG6FW [Accessed 20 Jan. 2026].
7. Anon, (2006). *Directive 2006/42/EC of the European Parliament and of the Council of 17 May 2006 on machinery, and amending Directive 95/16/EC (recast) (Text with EEA relevance)*. [online] Available at: https://eur-lex.europa.eu/legal-content/EN/TXT/?uri=CELEX:32006L0042 [Accessed 20 Jan. 2026].
8. Arduino Project Hub. (2024). *Bluetooth control car with 3D Printed Chassis*. [online] Available at: https://projecthub.arduino.cc/lee_curiosity/bluetooth-control-car-with-3d-printed-chassis-559757 [Accessed 20 Sep. 2025].
9. bio, S. full (2025). *Best Robot Lawn Mowers: After Testing Mowers for Weeks I Discovered the 4 Worth Buying*. [online] CNET. Available at: https://www.cnet.com/home/yard-and-outdoors/best-robot-lawn-mowers/ [Accessed 18 Sep. 2025].
10. Castle Compliance. (2026). *IEC 60529 Testing - Castle Compliance*. [online] Available at: https://castle-compliance.com/iec-60529-testing/ [Accessed 20 Jan. 2026].
11. Chandra Sekar, P., Prathima, K., Sai, M., Sasi Vardhan, S., Subba Rao, B., Sudheer, M. and Proffesor (2023). SOLAR POWERED GRASS CUTTING ROBOT. [online] 11, pp.2320–2882. Available at: https://ijcrt.org/papers/IJCRT2304128.pdf [Accessed 18 Sep. 2025].
12. China-gauges.com. (2025). *IEC 61000: Electromagnetic Compatibility (EMC) Standards and Testing for Equipment Manufacturers*. [online] Available at: https://www.china-gauges.com/news/IEC-61000-Electromagnetic-Compatibility-EMC-Standards-and-Testing-for-Equipment-Manufacturers.html [Accessed 20 Jan. 2026].
13. Circuitdigest.com. (2025). *CircuitDigest*. [online] Available at: https://circuitdigest.com/news/esp32-self-driving-robot-with-arduino-ros2-lidar [Accessed 20 Sep. 2025].
14. Dexter Industries. (2015). *dSolar - Dexter Industries*. [online] Available at: https://www.dexterindustries.com/manual/dsolar/ [Accessed 20 Sep. 2025].
15. DJ Sures (2022). *Adding Lidar Navigation to a Robot*. [online] YouTube. Available at: https://www.youtube.com/watch?v=KiCSkkenwFo [Accessed 20 Sep. 2025].
16. Electrosal. (2022). *SOLAR GRASS CUTTER WITH OBSTACLE AVOIDANCE WITH SPRAY - Electrosal*. [online] Available at: https://www.electrosal.com/product/solar-grass-cutter-with-obstacle-avoidance-with-spray [Accessed 20 Sep. 2025].
17. Enterprisesg.gov.sg. (2023). *Singapore Standards Council (SSC)*. [online] Available at: https://www.enterprisesg.gov.sg/grow-your-business/boost-capabilities/quality-and-standards/singapore-standards-council [Accessed 20 Sep. 2025].
18. Hackster.io (2017). *4 Wheel Drive, DC Motor Control for Raspberry Pi*. [online] Hackster.io. Available at: https://www.hackster.io/RedMnMGuy/4-wheel-drive-dc-motor-control-for-raspberry-pi-1300c4 [Accessed 20 Sep. 2025].
19. Iso.org. (2026). Available at: https://www.iso.org/obp/ui/en/#iso:std:iso:11684:ed-2:v1:en [Accessed 20 Jan. 2026].
20. Jessestevens.com.au. (2025). *Raspberry Pi 5, Ubuntu, ROS2 Jazzy Jalisco, iRobot Create 3 – all playing together – Personal Blog*. [online] Available at: https://jessestevens.com.au/2025/04/25/raspberry-pi-5-ubuntu-ros2-jazzy-jalisco-irobot-create-3-all-playing-together/ [Accessed 20 Sep. 2025].
21. Just Botond (2024). *How to Use Solar Charge Controller (PWM Controller, Wiring, 12v/24v Setup, Optimiztion parameters)*. [online] YouTube. Available at: https://www.youtube.com/watch?v=RZus82hB3Zc [Accessed 20 Sep. 2025].
22. Kuriosity. (2023). *Raspberry Pi 4 Pi 5 Aluminum Heatsink Heat Sink Case with Dual Fan - Kuriosity*. [online] Available at: https://kuriosity.sg/products/raspberry-pi-4-aluminum-heatsink-heat-sink-case-with-dual-fan?srsltid=AfmBOoov0n2ZRSAHB60l-lnxBFA05s2OeyuWbD4_IGu2P60Zv6CPVmk9 [Accessed 20 Sep. 2025].

23. kuruibms (2026). *3S BMS Voltage Guide Nominal Charging Protection Specifications*. [online] Kuruibms.com. Available at: https://kuruibms.com/blog/BMS-3S-Voltage-Guide.html [Accessed 20 Jan. 2026].
24. L298N DC Motor Driver Specs Input Voltage: 6-35 VDC Motor Drive Voltage: 0-35 VDC Driver Current: 2A MAX Continuous per channel (25W max power dissipation) Logic Voltage: 2-5V On/High, <2V Off/Low Max Current Output of 5V OUT: 500mA*** (See important note at bottom). (n.d.). Available at: https://brightspotcdn.byu.edu/cd/87/bbf866d84c06a0c52fa995396f30/l298n-motor-driver-quick-start-v6.pdf [Accessed 20 Sep. 2025].
25. LRQA. (2019). *Machinery Directive 2006/42/EC*. [online] Available at: https://www.lrqa.com/en-sg/machinery-directive/ [Accessed 20 Jan. 2026].
26. Medium.com. (2026). *Linewize Filter by Qoria*. [online] Available at: https://aditya-sunjava.medium.com/exploring-the-best-lightweight-desktop-environments-for-ubuntu-and-other-popular-linux-4a08ba31f23f [Accessed 20 Sep. 2025].
27. Model: BMS-20A-3S-S & BMS-20A-3S-EFJ ms:72M5366,72M5373. (n.d.). Available at: https://www.mantech.co.za/datasheets/products/BMS-20A-3S-S_SGT.pdf?srsltid=AfmBOooL7ylkzIIFDMfzuR2-oCRdRXNCJvURn_Y5gachkyjDZPRps5k6 [Accessed 22 Sep. 2025].
28. Monolithicpower.com. (2026). *Client Challenge*. [online] Available at: https://www.monolithicpower.com/en/learning/mpscholar/analog-vs-digital-control/regulatory-standards-and-compliance/introduction?srsltid=AfmBOoor9R2WWAA_TqmsikGvPumWJ8xYfFSxBazP-LeLKS55p7HL42ch [Accessed 20 Jan. 2026].
29. MPPT solar charger manual. (n.d.). Available at: https://www.victronenergy.com/upload/documents/Manual_SmartSolar_MPPT_75-10_up_to_100-20/29694-MPPT_solar_charger_manual-pdf-en.pdf [Accessed 20 Sep. 2025].
30. Nawaz Dhandala (2026). *How to Install XFCE Desktop on Ubuntu*. [online] OneUptime | One Complete Observability platform. Available at: https://oneuptime.com/blog/post/2026-01-15-install-xfce-desktop-ubuntu/view [Accessed 20 Sep. 2025].
31. Nikodem Bartnik (2024). *DIY Robot Mower - Complete Redesign (IndyMower #3)*. [online] YouTube. Available at: https://www.youtube.com/watch?v=oK9KGLNnRVY [Accessed 20 Sep. 2025].
32. omartronics (2024). *Advanced Autonomous and Remote-Controlled Robot Car with Arduino Mega*. [online] Cults 3D. Available at: https://cults3d.com/en/3d-model/gadget/advanced-autonomous-and-remote-controlled-robot-car-with-arduino-mega [Accessed 20 Sep. 2025].
33. Overview of IEC 61508 & Functional Safety. (n.d.). Available at: https://assets.iec.ch/public/acos/IEC%2061508%20&%20Functional%20Safety-2022.pdf?2023040501 [Accessed 20 Jan. 2026].
34. Palve, S., Panchal, K., Chipkar, R., Patil, A. and Sonawane, G. (n.d.). *SOLAR POWERED AUTOMATED GRASS CUTTER MACHINE*. [online] *International Research Journal of Engineering and Technology*. Available at: https://www.irjet.net/archives/V5/i4/IRJET-V5I4515.pdf [Accessed 18 Sep. 2025].
35. Plant, P. (2023). *A Brief History of Robotic Mowers | Power Plant Hire and Sales*. [online] Power Plant Hire and Sales. Available at: https://powerplant.ie/news/a-brief-history-of-robotic-mowers/ [Accessed 18 Sep. 2025].
36. Raspberrypi.org. (2017). Available at: https://projects.raspberrypi.org/en/projects/getting-started-with-picamera/5 [Accessed 20 Sep. 2025].
37. ReeR. (2024). *IEC 62061: Safety of Machinery - Useful Info | ReeR*. [online] Available at: https://www.reersafety.com/en/academy/industrial-safety-guide/iec-62061-safety-of-machinery/ [Accessed 20 Sep. 2026].
38. Ros.org. (2025). *Ubuntu (deb packages) — ROS 2 Documentation: Kilted documentation*. [online] Available at: https://docs.ros.org/en/kilted/Installation/Ubuntu-Install-Debs.html [Accessed 20 Sep. 2025].
39. Synthiam (2022). *The Better Navigator for ARC (SLAM & Autonomous Path Planning)*. [online] YouTube. Available at: https://www.youtube.com/watch?v=vqLGJZD_w9M [Accessed 20 Sep. 2025].
40. Synthiam (2023). *Robot Skills*. [online] Synthiam.com. Available at: https://synthiam.com/Support/Get-Started/how-to-make-a-robot/robot-skills [Accessed 20 Sep. 2025].
41. vuaeco (2018). *Testing Solar Charge controllers for 12V Li-ion battery pack. Which is best?* [online] YouTube. Available at: https://www.youtube.com/watch?v=8ZHD5R5qOfI [Accessed 20 Sep. 2025].
42. webstore.iec.ch. (n.d.). *IEC 62109-1:2010 | IEC*. [online] Available at: https://webstore.iec.ch/en/publication/6470 [Accessed 20 Jan. 2026].
43. with, H. (2021). *Help with DC Motor*. [online] Electrical Engineering Stack Exchange. Available at: https://electronics.stackexchange.com/questions/544182/help-with-dc-motor [Accessed 20 Sep. 2025].
44. www.intertek.com. (n.d.). *IEC 62133: Safety Testing for Lithium Ion Batteries*. [online] Available at: https://www.intertek.com/batteries/iec-62133/ [Accessed 20 Jan. 2026].
45. www.slamtec.com. (n.d.). *RPLIDAR-A1 360°Laser Range Scanner _ Domestic Laser Range Scanner|SLAMTEC*. [online] Available at: https://www.slamtec.com/en/Lidar/A1 [Accessed 20 Sep. 2025].
46. Yellow Purple (2023). *3S 20A Li-ion Lithium Battery 18650 Charger PCB BMS Protection Board || 6s 18650 Battery Pack 12.6V*. [online] YouTube. Available at: https://www.youtube.com/watch?v=tubLI8haAL4 [Accessed 20 Sep. 2025].

APPENDIX A — Gantt Chart

Look after the Updated_Gantt_Chart.xlsx file that submitted together with this report. The chart covered the full project duration (September 2025 to April 2026) with tasks colour-coded to show completed activities (blue), incomplete/deferred activities (red), and planned milestones. The SD card failure event is annotated on the chart.

OLD Gantt Chart:

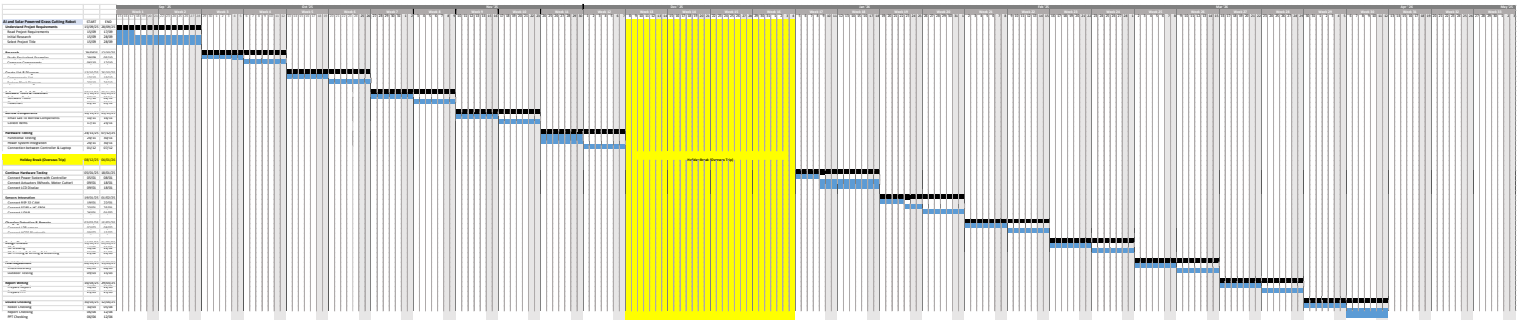

New Gantt Chart:

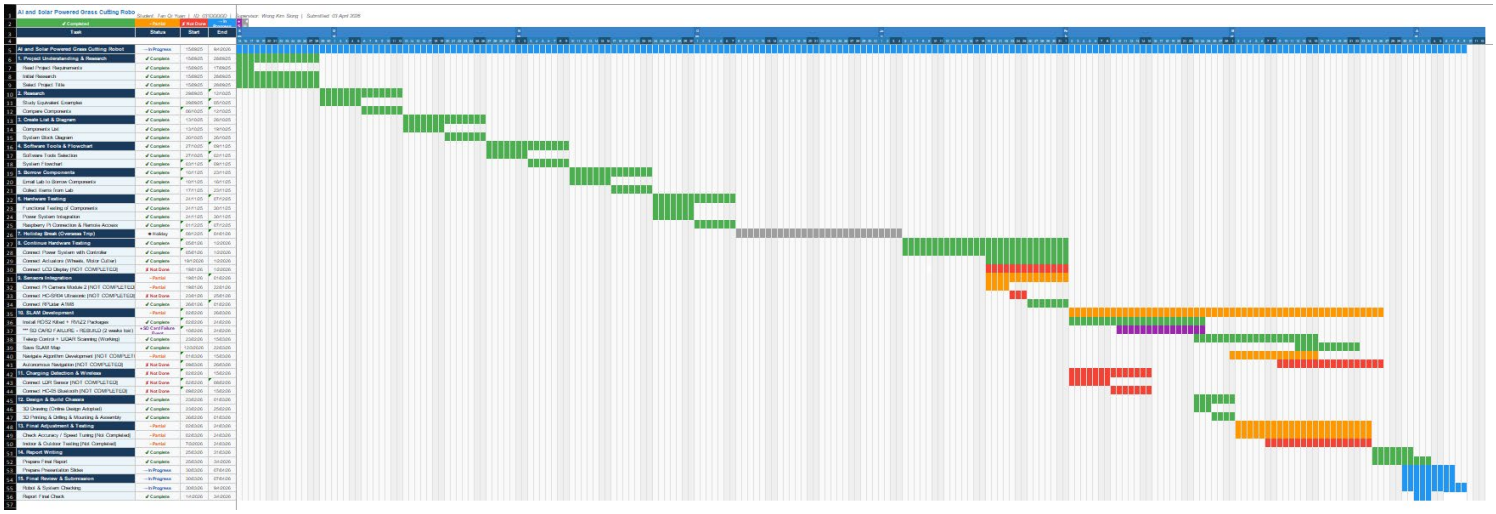

GITHUB Link:
[URL] – https://github.com/Seventy969/IMP
Stored: Flowchart, Gantt Chart (Old/New), Risk Assessment, Codes

YouTube Link:
[SolarChargeBatteryTestingURL] – https://youtu.be/AOLYDHLWg1Y
[SolarChargeaControllerTestingURL] – https://youtu.be/r81rF58QbzE
[FullRunDemoURL] – https://youtu.be/DD2j_6H0hDs
Stored: Testing & Demo Video

APPENDIX B — Component List

Component	Quantity	Quantity (Actually Used)	Source	Est Price (SGD/each)	Purpose / Notes
Raspberry Pi 4B 4GB RAM	1	1	Lab (borrowed)	85	Main onboard computer
RPLidar A1M8	1	1	Lab (borrowed)	150	2D LIDAR for SLAM
Pi Camera Module 2	2	0	Lab (borrowed)	30	Computer vision (unable to download libcamera library)
L298N Motor Driver	2	2	Lab (borrowed)	5	Motor control
5V DC Yellow Motor	7	5	Lab (borrowed)	3	4x locomotion + 1x cutter (2 extra)
Rubber Wheels	6	4	Lab (borrowed)	2	Drive wheels (2 extra)
LM2596 Step-Down Module	1	1	Lab (borrowed)	4	5V regulation from battery
3.7V 18650 Battery	11	9	Lab (borrowed)	6	To make 3S3P battery pack (2 extra)
Battery Holder	9	9	Lab (borrowed)	0.5	Store power
12.6V BMS Board	1	1	Lab (borrowed)	5	Battery protection
Dexter Solar Panel	2	2	Supervisor (borrowed)	40	Solar charging
Solar Panel	1	0	Lab (borrowed)	50	Solar charging (size too big)
HC-SR04 Ultrasonic	1	0	Lab (borrowed)	3	Obstacle detection (insufficient time to integrate)
SG90 Servo Motor	1	0	Own	3	Combine with HC-SR04 for obstacle detection (insufficient time to integrate)
LDR Sensor	1	0	Lab (borrowed)	1	Light detection (insufficient time to integrate)
HC-05 Bluetooth Module	1	0	Lab (borrowed)	5	Wireless control (insufficient time to integrate)
16x2 LCD I2C Display	1	0	Lab (borrowed)	4	Status display (insufficient time to integrate)
RPi Aluminium Case with Dual Fan	1	1	Lab (borrowed)	16	Thermal management
3D Printed Chassis	1	1	School 3D Printer	20	Robot Chassis
ON/OFF Button	2	0	Lab (borrowed)	0.7	Cut off power (insufficient time to integrate)
Arduino UNO & USB cable	1	0	Lab (borrowed)	35	Control low-level logic (no need anymore)
DC 12680 Super Lithium Polymer Battery	1	0	Lab (borrowed)	35	Store power (don't have charger)
Wheel Caster	1	0	Lab (borrowed)	5	Balancing (no need anymore)
Male DC Jack	1	1	Lab (borrowed)	0.5	Connect to LM2596 to power RSPi
Female DC Jack	1	1	Lab (borrowed)	0.5	For lithium-ion battery charger to charge
12V 5A Lithium-Ion Battery Charger	1	1	Own	6	Charge for developing and testing
EST Total Amount (Ideal):	485.50 (SGD)			**EST Total Amount (Reality):**	6 (SGD)
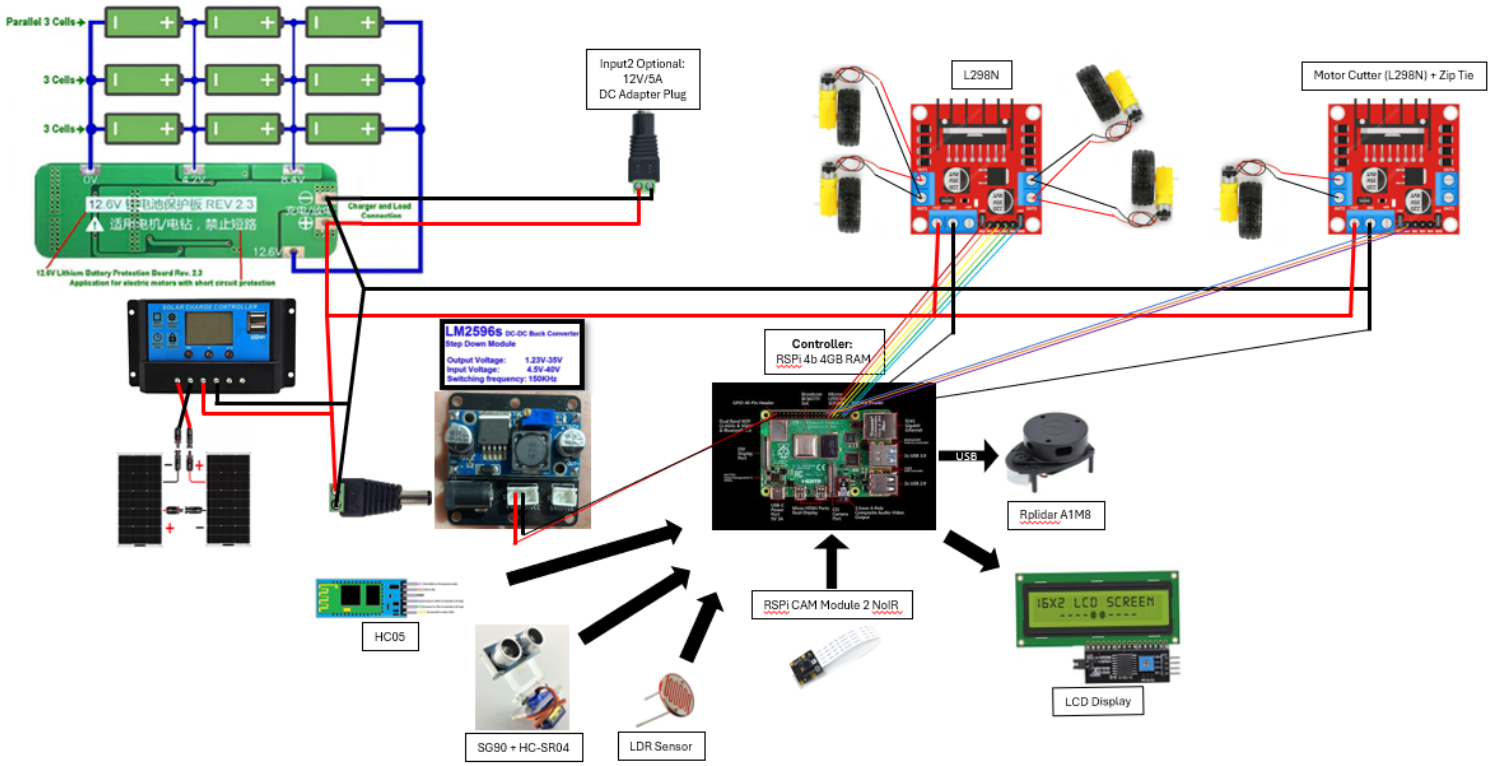
APPENDIX C — Wiring Diagram