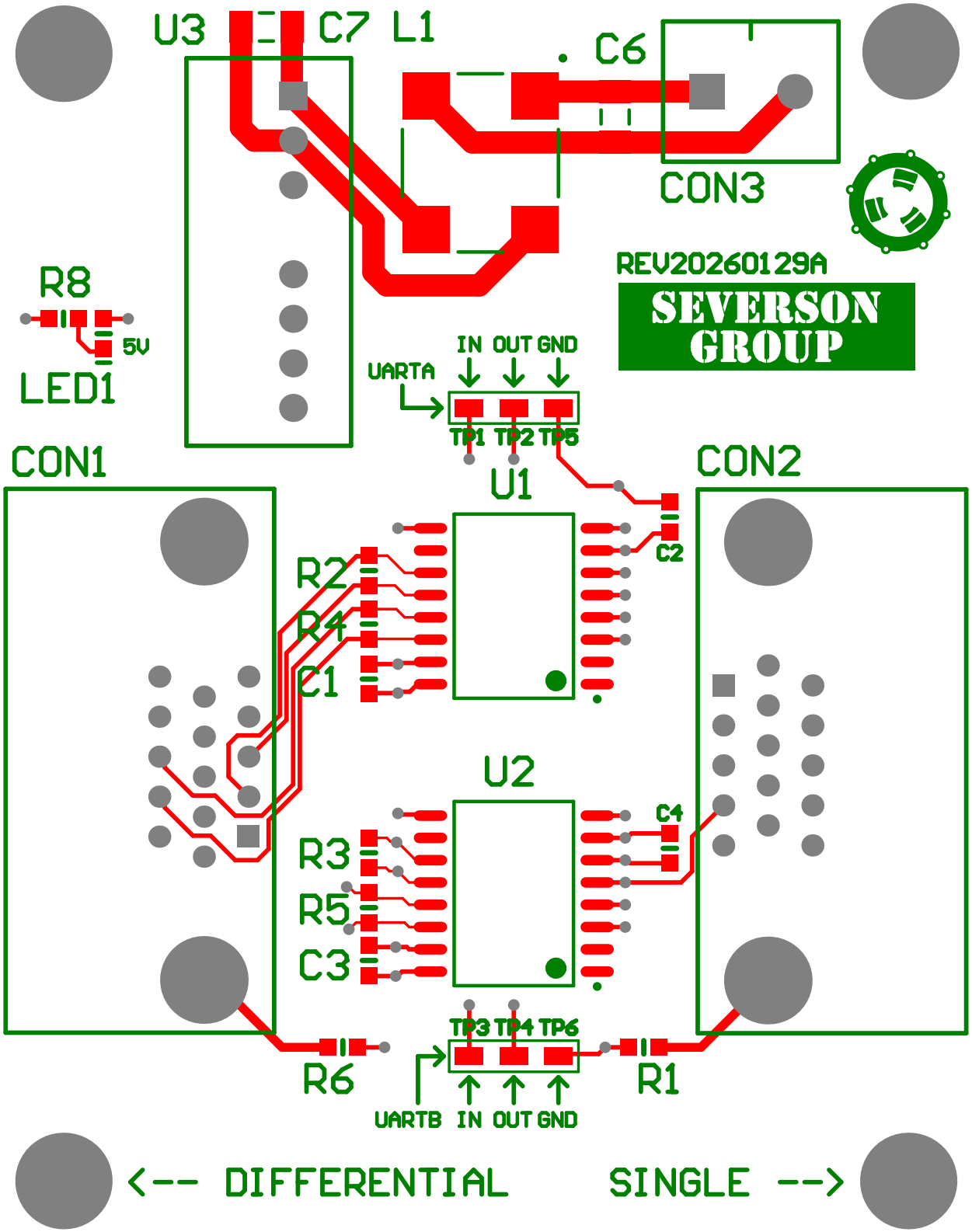
U3
C7
L1
C6
CON3
REV20260129A
SEVERSON GROUP
R8
5V
LED1
UARTA
IN OUT GND
TP1 TP2 TP5
U1
CON1
CON2
C2
R2
R4
C1
U2
C4
R3
R5
C3
TP3 TP4 TP6
R6
R1
UARTB IN OUT GND
<-- DIFFERENTIAL
SINGLE -->

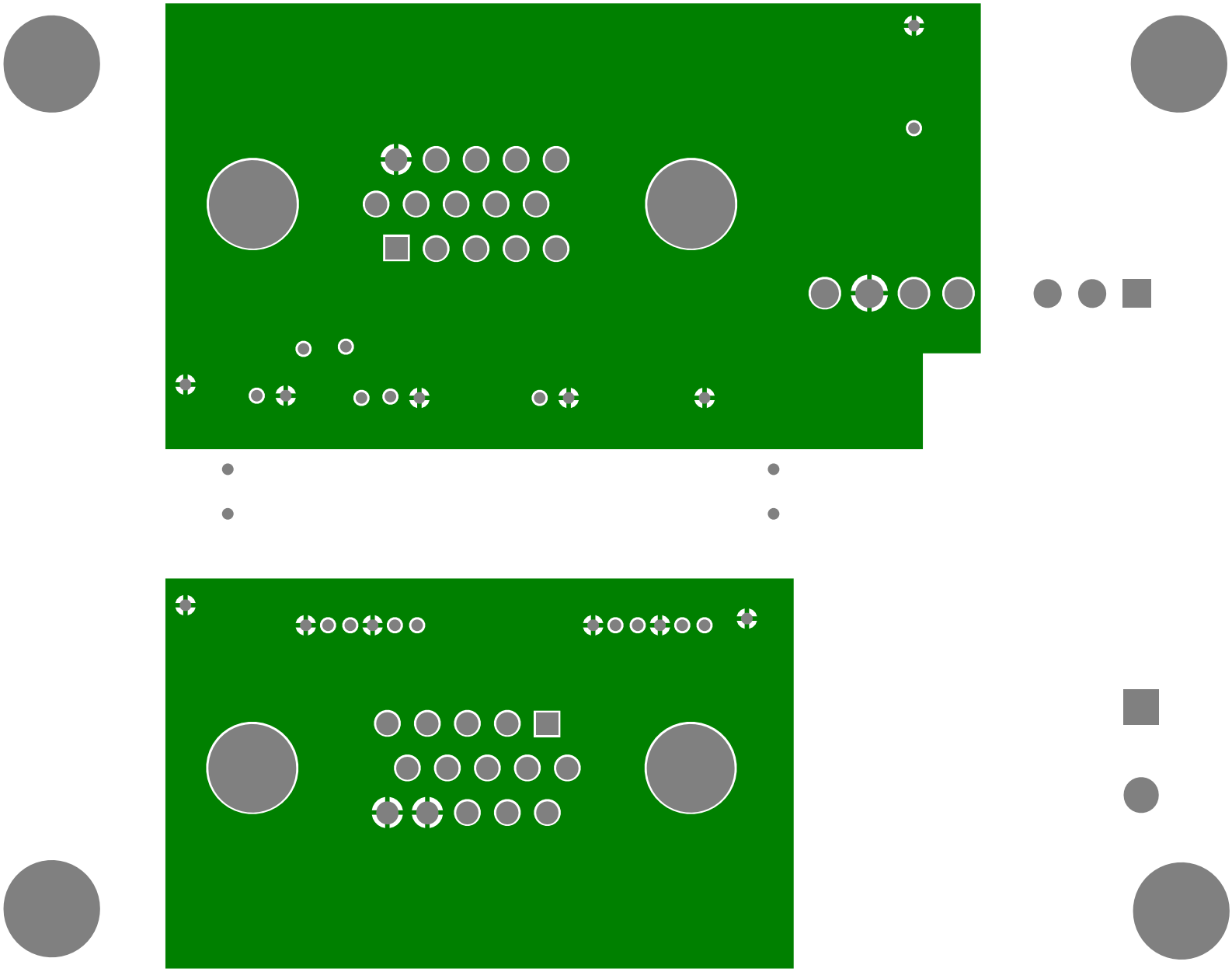

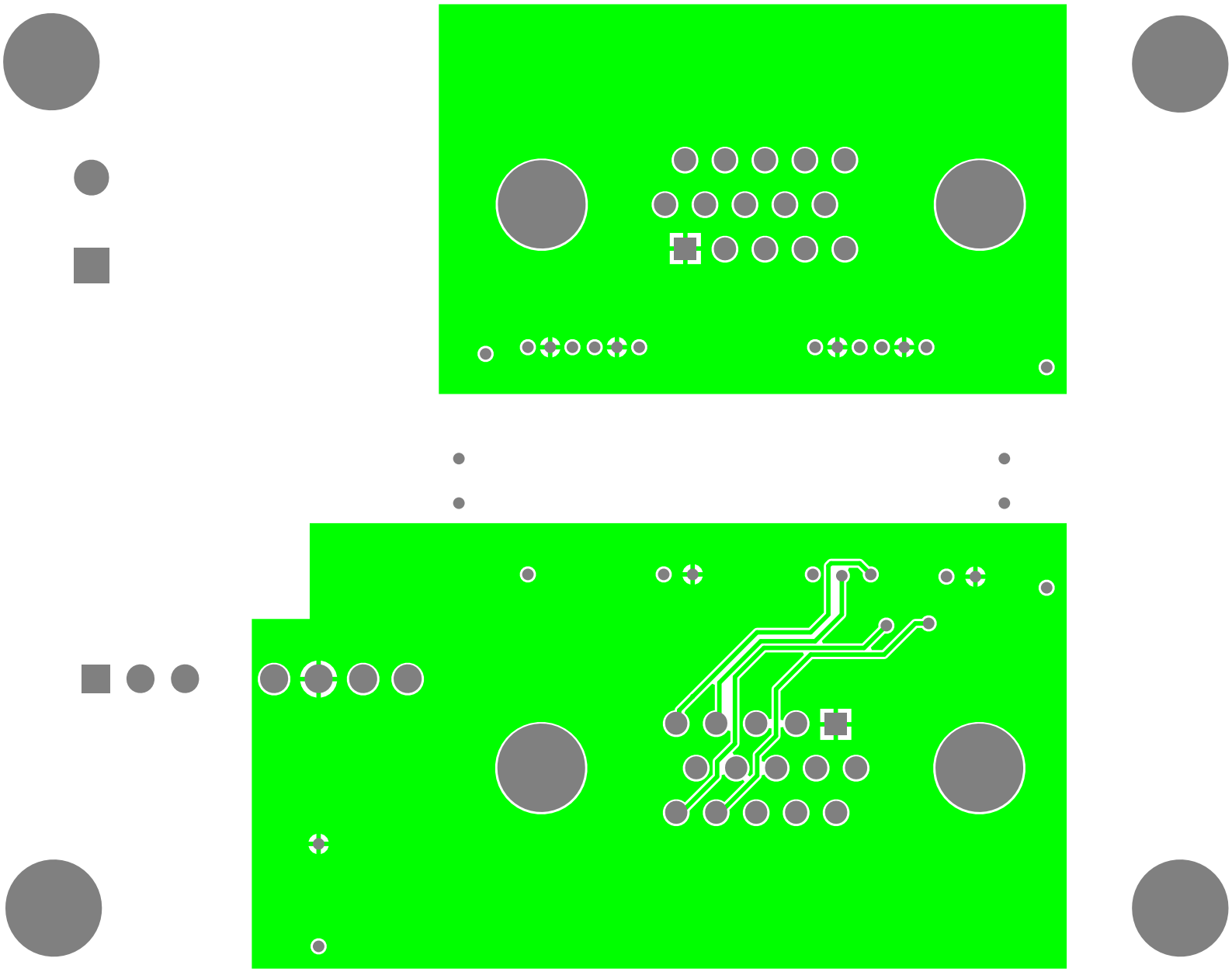

C5
R7