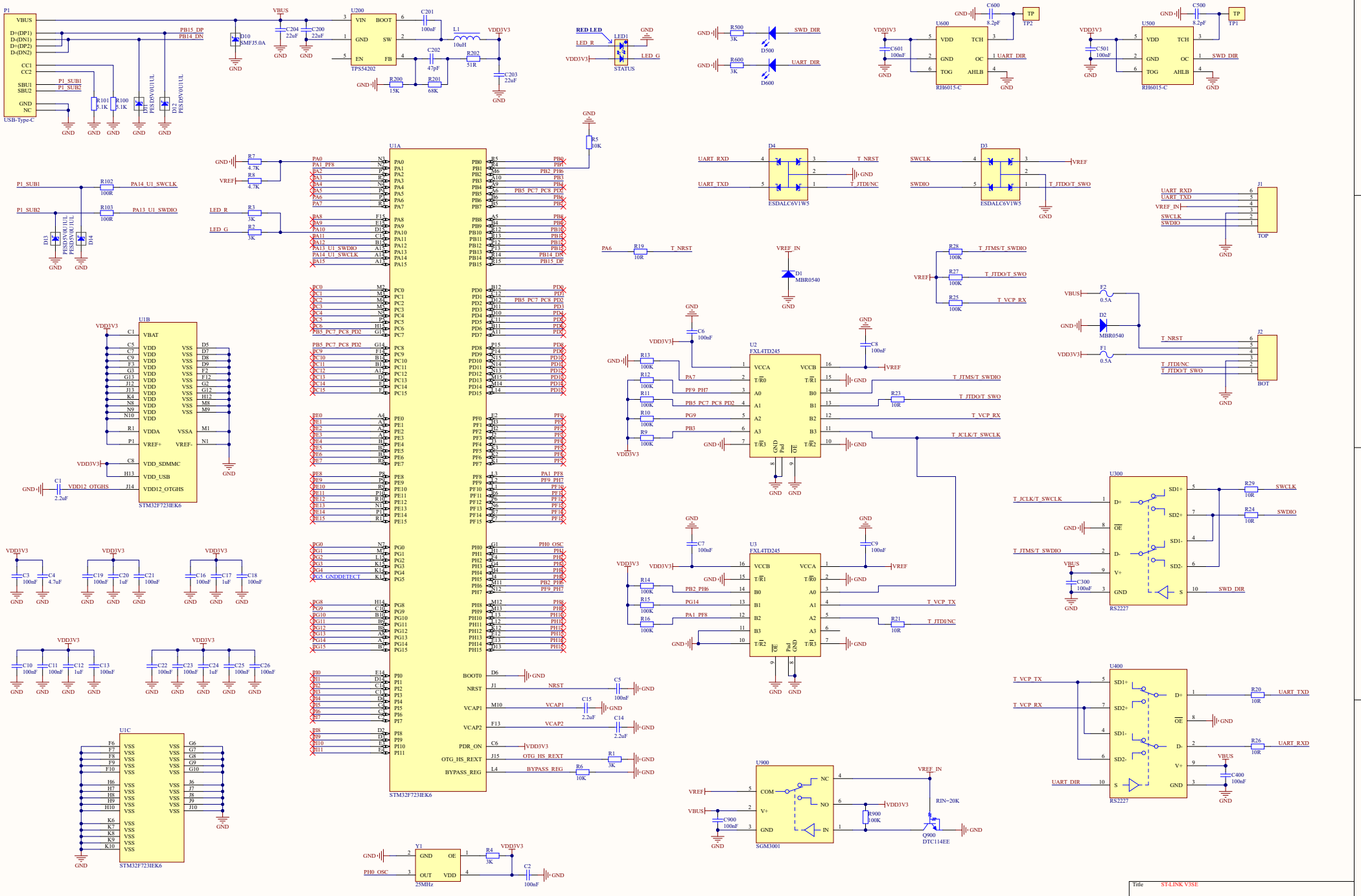

Title	ST-LINK V3SE		
Size A2	Number		Revision V2 Release-1
Date: 6/24/2024		Sheet of	
File: G:\项目\...\ST-LINK V3SE.SchDoc		Drawn By:	