worldskills Kazakhstan

# Module C – Networking Environment

*IT Network System Administration*

## Submit:

Submitted: Almabekuly A

# CONTENTS

**Introduction** ..... **3**

**Introduction to Test Project** ..... **4**

Introduction ..... 4

Description of project and tasks ..... 4

Physical Topology ..... 5

Logical Topology ..... 5

Routing Topology ..... 5

Instructions to the Competitors ..... 6

**Configuration Tasks** ..... **6**

General Configuration ..... 6

L2 Services ..... 7

EIGRP ..... 8

OSPF ..... 8

BGP ..... 9

IP Services ..... 9

Security and VPN ..... 10

## INTRODUCTION

The qualified competition has a fixed start and finish time. You must decide how to best divide your time.

**Please carefully read the following instructions!**

When the competition time ends, please leave your station in a running state. The assessment will be done in the state as it is. No reboot will be initiated as well as powered off machines will not be powered on!

Please use the information below for all network devices and hosts.

## INTRODUCTION TO TEST PROJECT

The following is a list of sections or information that must be included in all Test Project proposals that are submitted to WorldSkills.

- Contents including list of all documents, drawings and photographs that make up the Test Project
- Introduction/overview
- Short description of project and tasks
- Instructions to the Competitor
- Other

# Introduction

In today's IT landscape, proficiency in network technology is increasingly vital for individuals aspiring to excel in any IT engineering discipline. This test project presents numerous challenges drawn from real-world scenarios, focusing predominantly on IT Networking and Integration. Successfully completing this project with a high score demonstrates your readiness to manage network infrastructures for multi-branch enterprises.

# Description of project and tasks

This test project is designed using a variety of network technologies that should be familiar to those who have studied for Cisco ENARSI (Implementing Cisco Enterprise Advanced Routing and Services) certification track. In addition to the knowledge gained from this certification track, you are expected to have CCNA - Implementing and Administering Cisco Solutions certification knowledge to complete this Test Project.

## Physical Topology

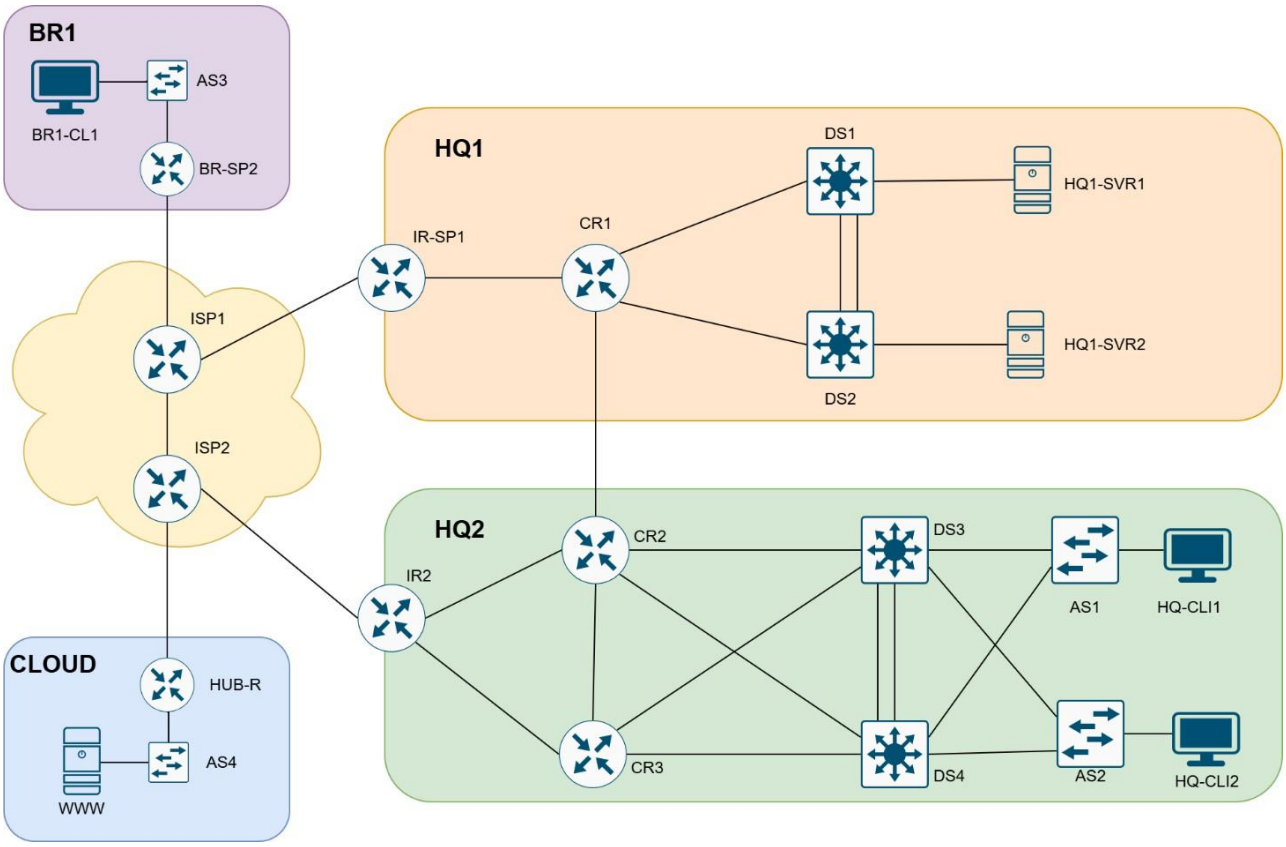


## Routing Topology

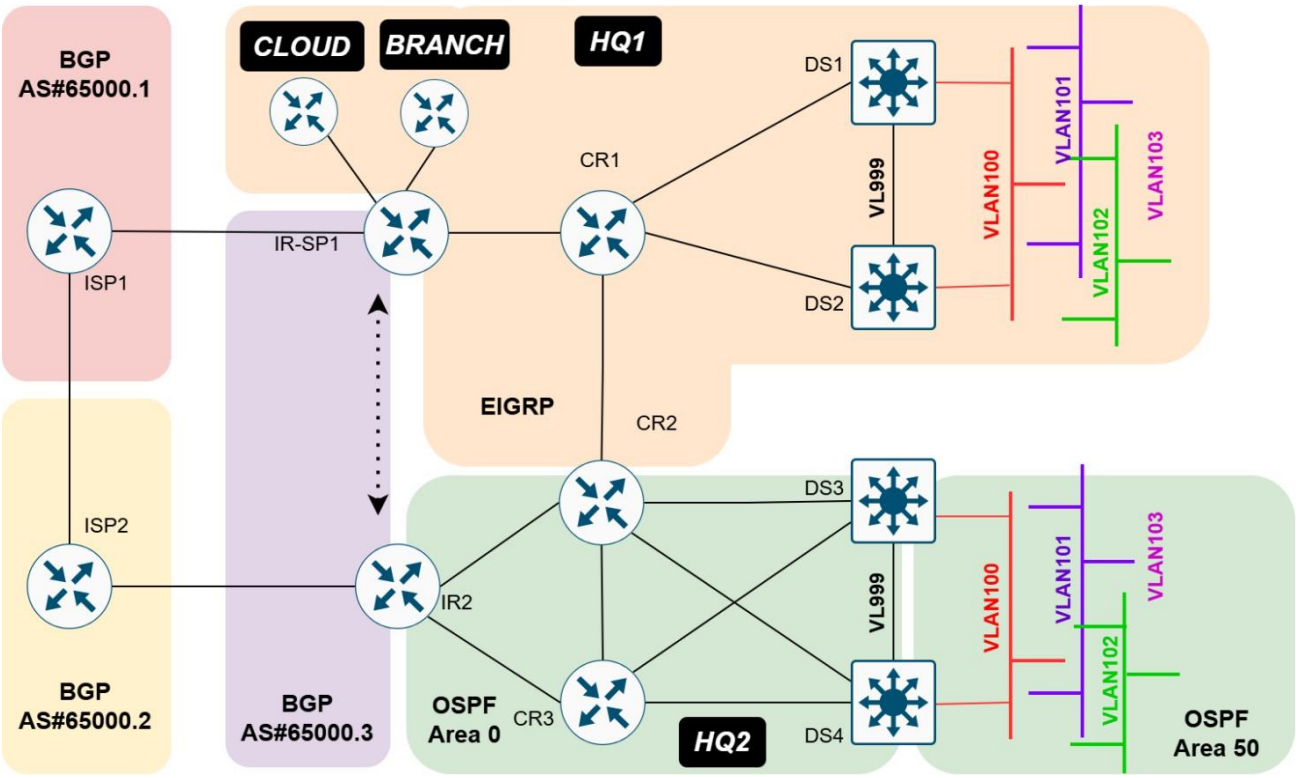

## Instructions to the Competitors

Please carefully read below instruction.

1. Read all tasks in each section before proceeding with any configuration. The completion of any item may require the completion of any previous or later item.
2. Points are awarded for working configurations only. Test the functionality of all the requirements before you submit the test project. Be careful, because as you configure one part, you may break a previous requirement or configuration.
3. No partial points can be granted for any aspect; all requirements need to be fulfilled to receive the points for the aspect. Some requirements depend on other aspect's requirements, either before or after the current aspect.
4. Save your configurations frequently; accidents do and will happen.
5. Hosts are preconfigured but check the configuration and change it when necessary.
6. If you disabled any interfaces for testing, ensure that all of them are enabled before submitting your Test Project.

## CONFIGURATION TASKS

# General Configuration

1. All network devices must have their **hostnames configured according to the topology**.
2. **SSH version 2** must be enabled using the following parameters:
   a) **Domain name:** skills.kz
      RSA key size: 2048 bit
      Local user account: admin
      Password: Passw0rd!
   b) Ensure all passwords use type 9 encryption (as shown below). That user should have the highest privileges you can give.

```
AS3(config)#do sh run | i admin|enable
username admin privilege 15 secret 9
$9$NOUZJkpL/2WNiv$pL9bus2.Tf90j8ZBwV1AwBfv/jPJFmmzmWtH0WUF2/Q
enable secret 9
$9$eXQkNfnt7wXC5f$wmtQW14ysBLUDV87oOrKy90eX8FXdYKP77JaEMr7ddo
```

3. Only SSH access must be permitted on the virtual terminal lines, all other remote access protocols must be disabled.
4. Please configure IPv4 address for all physical and logical interfaces on all devices in the topology accordingly Appendix A.
5. Configure all routers and switches timezone UZT (UTC+5).

# L2 Services

1. Configure VTP domain "Skills.kz" on DS1, DS2, DS3, DS4, AS1, AS2, AS3 and AS4. No VTP message propagation allowed in any these switches.
2. Configure following VLANs across distribution (DSx) and access switches (ASx) in this topology.

| VLAN ID | VLAN NAME | DEVICES |
|---|---|---|
| 100 | SERVER | DS1, DS2, DS3, DS4, AS1, AS2, AS3 |
| 101 | CLIENT_1 | DS1, DS2, DS3, DS4, AS1, AS2, AS3 |
| 102 | CLIENT_2 | DS1, DS2, DS3, DS4, AS1, AS2, AS3 |
| 103 | MGMT | DS1, DS2, DS3, DS4, AS1, AS2, AS3 |
| 999 | L3_P2P | DS1, DS2, DS3, DS4 |

3. Configure STP to meet the requirements below
   a) In HQ1, DS1 should be the STP root bridge for all vlans (including future vlans) and DS2 should become the root bridge if DS1 is down.
   b) In HQ2, DS3 should be the STP root bridge for all vlans (including future vlans) and DS4 should become the root bridge if DS3 is down.
   c) These STP convergences require to happen as quickly as possible. Choose the right STP mode to achieve that outcome.
4. Configure all distribution switches (DS1-4) ports connect to AS1 and AS2 as trunk ports. Configure vlan 888 as native vlan across these trunk ports.
   a) Also configure AS3 G0/0 and AS4 G0/0 interfaces as trunk ports. You can leave vlan 1 as native vlan for these trunk ports.
5. Configure logical interface (use 12 for interface number) between DS1 and DS2 to pass all vlan across it. Assign physical interface G0/1 and G0/2 to it. You require to use LACP as protocol and both switches should be able to initiate the negotiation. Traffic should be loadbalance across both links based on source and destination IP address.
6. Configure logical interface (use 34 for interface number) between DS3 and DS4 without using dynamic negotiation. Assign physical interface G0/2 and G0/3 to it.
7. Configure HSRP for 4 vlans (100-103) to meet following conditions.
   a) In each subnet, default gateway IP address needs to be .10 in each /24 subnet. Use vlan

number as HSRP group number when configuring.
   b) DS3 should be the HSRP active for HQ2.
   c) In case of active device DS3 goes down DS4 should act as active device in each site. When DS3 comes back after failure, it should be take over HSRP active role once it is operational.

## EIGRP

Configure EIGRP protocol in HQ1 (IR-SP1, CR1, CR2, DS1 and DS2 devices) to achieve the following requirements. You will be asked to configure EIGRP on HUB-R and BR-SP2 as part of section "Security and VPN".

1. Configure an EIGRP process in each of those devices where you can enable IPv4 under EIGRP instance. You need to use the name "**Skills.kz**" for this EIGRP configuration. Do not enable EIGRP on interfaces connecting to CR2 in HQ2.
2. For IPv4, use autonomous system number 2025. Makesure loopback 1 IP address become EIGRP router-id.
3. Advertise all loopback and /30 P2P (point-to-point) networks into EIGRP on IR-SP1, CR1, CR2, DS1 and DS2. Advertise vlan 100-103 networks into EIGRP in DS1 and DS2.
4. By default, all EIGRP hello messages should be suppressed in all interfaces. Only enable it on interfaces where EIGRP adjacencies required.
5. On Router CR1, summarize HQ1 vlan 100-103 subnets and advertise it via EIGRP to IR-SP1.

## OSPF

Configure OSPF protocol in HQ2 (IR2, CR2, CR3, DS3 and DS4 devices) to achieve the following requirements.

1. Configure OSPF process 100 in each of those devices. Use Loopback 1 interface as router-id in each of those devices.
2. Advertise all /30. P2P links and Loopback 1 interfaces to OSPF area 0.
3. DS3 and DS4, configure vlan 100-103 network in OSPF area 50.
4. OSPF hello messages should be only sent via /30 networks where devices are interconnected.
5. When establish OSPF adjacencies, devices should not elect DR/BDR
6. IR2 to advertise default route into OSPF if it receives a default route from ISP2 via BGP.
7. Ensure IR2 is advertise default route to other OSPF routers if it receives a default route from ISP2. This should appear as Type 2 route with metric value of 5000.
   a) Advertise a default route into OSPF on CR2 with metric value 4000.
   b) CR3 should inject the default route into OSPF only if 10.1.0.20/30 network (ie G 0/3 interface is up) on their routing table
   c) CR2 must redistribute default route into EIGRP.
8. Configure route redistribution between EIGRP and OSPF on CR2 so that HQ1 can access HQ2 subnets (vice-versa)
   a) Define IP prefix lists "HQ1-SUBNETS" to include Loopbacks, P2P and vlan100-103 IPs in HQ1, BRANCH and CLOUD.
   b) When HQ2 routes go into EIGRP they should come with tag value 23.
   c) Prevent any routing loops while performing mutual route-redistribution.
9. Configure OSPF summary routes on ABR and ASBR routers only summary route being advertised.
10. After configuring the routing for HUB-R and CLOUD, ensure that summary routes and loopback addresses are available on HQ1 devices OSPF routing table.

## BGP

Configure the BGP protocol on IR-SP1 and IR2 routers to meet the given requirements. The IP addresses of service provider (ISP1, ISP2) WAN links should not be advertised to any routers other than those locally connected (IR-SP1, IR2, BR-SP2 and HUB-R)

1. Configure eBGP sessions on IR-SP1 and IR2 (both in AS#65000.3) with ISPx router G0/0 IPs.
2. Configure an iBGP peer group named "skills.kz" on IR-SP1 and IR2 to establish iBGP peering among themselves. It requires following settings.
   a) Keepalive interval 10s and Holddown time of 30s
   b) Authenticate each iBGP sessions with password Passw0rd!
   c) BGP peering to use loopback0 interface IP

3. AS 65000.1 and AS 65000.2 must advertise only a default route (0.0.0.0/0) to the IR-SP1, IR2, BR-SP1 and HUB-R. Ensure that no other prefixes are advertised.
4. Authentication must be enabled on all eBGP peering to ensure secure session establishment. Authentication password: Passw0rd!
5. BGP router-ID must be the Loopback0 interface IP.

## IP Services

You have been asked to configure following IP services.

1. When vlan 101-102 users (~400 in total users and require simultaneous internet access) in HQ2 and HUB-R communicate with internet (You can use 8.8.8.8 IP for testing) their addresses should be translated to following addresses depend on the internet router it goes through.
    a) Traffic goes via IR2
2. IR-SP1 and IR2 should get its time from ISP1 peering address.
    a) All other devices in HQ1, HQ2, HUB-R and CLOUD should use IR-SP1 and IR2 as their NTP servers.
    b) Use loopback address for NTP communication with IR-SP1 and IR2. (Except AS1 to AS4 where you can use SVI 103 IP)
3. Configure DHCP services on DS3 to meet requirements below.
    a) VL101 DHCP address scope 10.11.101.101-10.11.101.254 with default router of 10.11.101.10
    b) VL102 DHCP address scope 10.11.102.101-10.11.102.254 with default router of 10.11.102.10
4. Configure DHCP services HUB-R in a way clients HUB-R get IP address from vlan 101.
    a) HUB-R- VL101 DHCP address scope 10.1.101.101-10.1.101.254 with default-gateway 10.1.101.10.

## Security and VPN

Multiple branch sites need to connect to the CLOUD network. To test the new connectivity, BR-SP2 & IR-SP1 have been required to configure as DMVPN spoke site with HUB-R router in CLOUD.

1. Router IR2 provides internet access to all Skills.kz customer sites.
2. Configure HUB-R as DMVPN Hub for branch sites connectivity. You require to consider below when configuring HUB-R.
    a) Use network-id 2025.
    b) Use string **skillskz** to identify NHRP domain when establishing VPN connectivity.
    c) IR-SP1 and BR-SP2 should establish dynamic tunnel between then when communicating each other.
    d) Use security parameters:

| Security : Phase 1 | | | |
|---|---|---|---|
| **Encryption** | **Hash** | **Authentication** | **DH group** |
| AES256 | SHA256 | PSK : **Passw0rd!** | 14 |
| **SECURITY : PHASE 2** | | | |
| **Encryption** | **Hash** | **Mode** | **Encapsulation protocol** |
| AES256 | SHA256 | Tunnel | ESP |

3. Configure EIGRP between IR-SP1, HUB-R and BR-SP2.
    a) IR-SP1, HUB-R and BR-SP2 have to advertise a summary route for networks corresponds to vlan 100-103 networks at that site.
4. Limit only HQ-SVR1 can SSH into IR-SP1 and IR2.
5. Enable port security on HQ-CLI1 and HQ-CLI2 connected switchports. There is a plan to deploy VOIP handsets in HQ2 on vlan 150. You can define VLAN150 (named VOIP) on AS1 and AS2 for this task.
    a) Limit the mac addreses to minimum required if those PCs go behind VOIP phone.
    b) If an unknown MAC address is detected, block traffic but do not shut down the port.
6. Implement an ACL to block vlan 102 users in HQ2 and BR-SP2 to HQ-SVR1 server. This should not break any previously configured access from HQ1-SVR1 to other devices.

# Appendix A. Network Address Plan

## A.1. WAN (provider link networks)

| Link | Network | Purpose |
|---|---|---|
| BR-SP2 – ISP1 | 198.51.100.0/30 | P2P link BRANCH ↔ ISP1 |
| HUB-R – ISP2 | 198.51.100.4/30 | P2P link CLOUD ↔ ISP2 |
| IR-SP1 – ISP1 | 198.51.100.8/30 | P2P link HQ1 ↔ ISP1 |
| IR2 – ISP2 | 198.51.100.12/30 | P2P link HQ2 ↔ ISP2 |

## A.2. Internal P2P /30 (core and L3 links)

| Link | Network | Purpose |
|---|---|---|
| IR-SP1 – CR1 | 10.1.0.0/30 | P2P HQ1 core |
| CR1 – DS1 | 10.1.0.4/30 | P2P HQ1 core |
| CR1 – DS2 | 10.1.0.8/30 | P2P HQ1 core |
| CR1 – CR2 | 10.1.0.12/30 | P2P HQ1 ↔ HQ2 core |
| IR2 – CR2 | 10.1.0.16/30 | P2P HQ2 core |
| IR2 – CR3 | 10.1.0.20/30 | P2P HQ2 core |
| CR3 – CR2 | 10.1.0.24/30 | P2P HQ2 core |
| CR2 – DS3 | 10.1.0.28/30 | P2P HQ2 core |
| CR2 – DS4 | 10.1.0.32/30 | P2P HQ2 core |
| CR3 – DS3 | 10.1.0.36/30 | P2P HQ2 core |
| CR3 – DS4 | 10.1.0.40/30 | P2P HQ2 core |
| DS1 – DS2 (VLAN 999 SVI) | 10.1.0.44/30 | L3 P2P HQ1 (SVI VLAN 999) |
| DS3 – DS4 (VLAN 999 SVI) | 10.1.0.48/30 | L3 P2P HQ2 (SVI VLAN 999) |

## A.3. VLAN networks per site

| Site | VLAN | Network | Role |
|---|---|---|---|
| **HQ1** | 100 | 10.10.100.0/24 | SERVER |
| | 101 | 10.10.101.0/24 | CLIENT_1 |
| | 102 | 10.10.102.0/24 | CLIENT_2 |
| | 103 | 10.10.103.0/24 | MGMT |
| **HQ2** | 100 | 10.11.100.0/24 | SERVER |
| | 101 | 10.11.101.0/24 | CLIENT_1 |
| | 102 | 10.11.102.0/24 | CLIENT_2 |
| | 103 | 10.11.103.0/24 | MGMT |
| **BRANCH** | 100 | 10.1.100.0/24 | SERVER |
| | 101 | 10.1.101.0/24 | CLIENT_1 |

| | | | |
|---|---|---|---|
| | 102 | 10.1.102.0/24 | CLIENT_2 |
| | 103 | 10.1.103.0/24 | MGMT |
| **CLOUD** | 100 | 10.2.100.0/24 | SERVER |
| | 101 | 10.2.101.0/24 | CLIENT / WWW |
| | 102 | 10.2.102.0/24 | CLIENT_2 |
| | 103 | 10.2.103.0/24 | MGMT |

**Loopback0 and Loopback1 addresses**

| Site | Device | Loopback0 | Loopback1 |
|---|---|---|---|
| ISP | ISP1 | 10.0.1.1/32 | — |
| ISP | ISP2 | 10.0.1.2/32 | — |
| HQ1 | IR-SP1 | 10.0.1.11/32 | 10.0.0.11/32 |
| HQ1 | CR1 | — | 10.0.0.12/32 |
| HQ1 | DS1 | — | 10.0.0.13/32 |
| HQ1 | DS2 | — | 10.0.0.14/32 |
| HQ2 | IR2 | 10.0.1.12/32 | 10.0.0.21/32 |
| HQ2 | CR2 | — | 10.0.0.22/32 |
| HQ2 | CR3 | — | 10.0.0.23/32 |
| HQ2 | DS3 | — | 10.0.0.24/32 |
| HQ2 | DS4 | — | 10.0.0.25/32 |
| BRANCH | BR-SP2 | 10.0.1.21/32 | 10.0.0.31/32 |
| CLOUD | HUB-R | 10.0.1.22/32 | 10.0.0.32/32 |

**Tunnel Addresses**

| Router | Tunnel ID | IP |
|---|---|---|
| HUB-R (HUB) | 100 | 10.2.2.1/24 |
| IR-SP1 | 100 | 10.2.2.2/24 |
| BR-SP2 | 100 | 10.2.2.3/24 |